

Vol. 2 No. 2 (2024)

INTERNATIONAL JOURNAL OF INDUSTRIAL AND PRODUCTION ENGINEERING (IJIPE)

JOURNAL HOMEPAGE: https://journals.unizik.edu.ng/index.php/ijipe/

Design and Construction of a Pet (Polyethylene Terephthalate) Shredding Machine

Emagbetere Eyere, Iwobi Ikechukwu, Mgbemena Chinedum

Department of Mechanical Engineering, Federal University of Petroleum Resources Effurun, Delta State, Nigeria

Corresponding Author: mgbemena.ogonna@fupre.edu.ng

Abstract

Due to their non-biodegradable nature and insufficient disposal techniques, the extensive usage of polyethylene terephthalate (PET) plastics has raised serious environmental pollution concerns. This research project aims to design and develop an eco-friendly PET plastic shredding machine with improved performance, lower energy consumption, and less maintenance needs to address these problems. It incorporates enhanced blade structure, portability, and lower energy consumption, with major components designed using standard equations. Engineering drawings were created using SOLIDWORKS and analyzed on ANSYS before construction and testing. A dual hexagonal shaft with 32 242mm diameter shredder blades was designed, supported by a 1.5HP, 3-phase gear motor. The PET plastic shredder, measuring 928mmx350mmx817mm, underwent Finite Element Analysis with a 225Nm torque applied to the blade tip, resulting in a shear stress of 51.7Mpa, and a pressure equal to the plastic to be shredded. The main frame was tested for stress on the motor and shredding unit using a 6mm mesh size. To test, 10 PET plastic bottles weighing 310g each were fed into the hopper and shredded based on the volume of the hopper. A throughput of 3.1kg was obtained in 36.23s after shredding. Beyond the goals of waste reduction, issues regarding the economic and environmental impact of this machine were addressed and recommendations for improvement and further research were considered.

Keywords: ANSYS, Eco-friendly, Finite Element Analysis (FEA), PET (Polyethylene Terephthalate), Plastic shredding machine, SOLIDWORKS.

1. Introduction

All facets of society are dominated by plastics. It is impossible to get through a day without an encounter with plastic of some form; we sleep on plastic-filled pillows, brush our teeth with plastic toothbrushes, type on plastic keyboards, drink and eat meals from plastic containers, etc. The 20th century ushered a revolution in the manufacturing of new compounds and materials, with the production of plastic at the forefront of this milestone. Researchers described the last half of the 20th century as "Plastic age" because of the global production and consumption of this material. (Fischer, 2019). Polyethylene terephthalate (PET) mechanical strength and adaptability have made it a mainstay of the contemporary plastics industry. PET has seen a multifarious expansion in application over the past few decades. It is mostly used in packaging, particularly for beverage bottles, and as a fiber material in the textile industry (Zhou et al.,2020). Despite PET's extensive use, there is the issue of its environmental sustainability that still poses serious concerns. The increasing consumption of PET packaging materials by populations in developing nations is directly linked to the ecological problems that waste polyethylene terephthalate (PET) packaging materials pose in the land, air, and water compartments of the environment today (Elehinafe et al., 2021). Various risks to living beings are posed by excessive accumulation of plastic and its associated waste (Ogunola et al., 2018, Salem et al., 2018). Because PET is not biodegradable and there are problems with how to dispose of it after its useful life, there is an urgent need for efficient recycling solutions (Awaja & Pavel 2005). David and Joel, 2018 posited that the majority of PET bottles produced in Nigeria are not collected and recycled by the plastic manufacturers. But since more bottles are made every day, the threat that litter poses to the nation only grows.

The growing demand for effective plastic waste management has led to a great deal of interest in the design and simulation of plastic shredding machines in recent years. Researchers have deployed several strategies to optimize design and performance of these machines. Computer-aided design (CAD) and finite element analysis (FEA) were used in a study by Singh et al., (2022) to simulate the shredding process and optimize the machine's design parameters. Similarly, to increase the efficiency of the machine and study the flow of plastic materials during shredding, Kumar et al. (2020) used computational fluid dynamics (CFD). Other scholars have concentrated on creating cutting-edge shredding methods, like using rotary cutters (Rahman et al., 2019) as well as reciprocating blades (Patel et al., 2018). The use of machine learning (ML) and artificial intelligence (AI) approaches to enhance the performance of plastic shredding machines has also been investigated in recent studies. For example, a study

by Chen et al. (2022) showed how machine learning algorithms may be used to optimize machine parameters and anticipate shredding outcomes. The goals of this research project are to build a PET plastic shredding machine with improved performance, lower energy consumption, and less maintenance needs.

2. Research Methodology

The methodology for this project can be divided into several stages, the design stage which utilize the knowledge obtain from the research in the literature review into developing an optimal product, the prototyping which involves building a physically model of the machine and test its performance. Drafting of the designed model of the machine was done with SOLIDWORKS and ANSYS was used for performing the finite element analysis of core parts of the PET shredding machine. Performance evaluation of the shredding machine was done by measurement of shredding rate using a throughput of weight per second. The shredding rate gives insight into the time it will take to shred a specified mass of PET plastic.

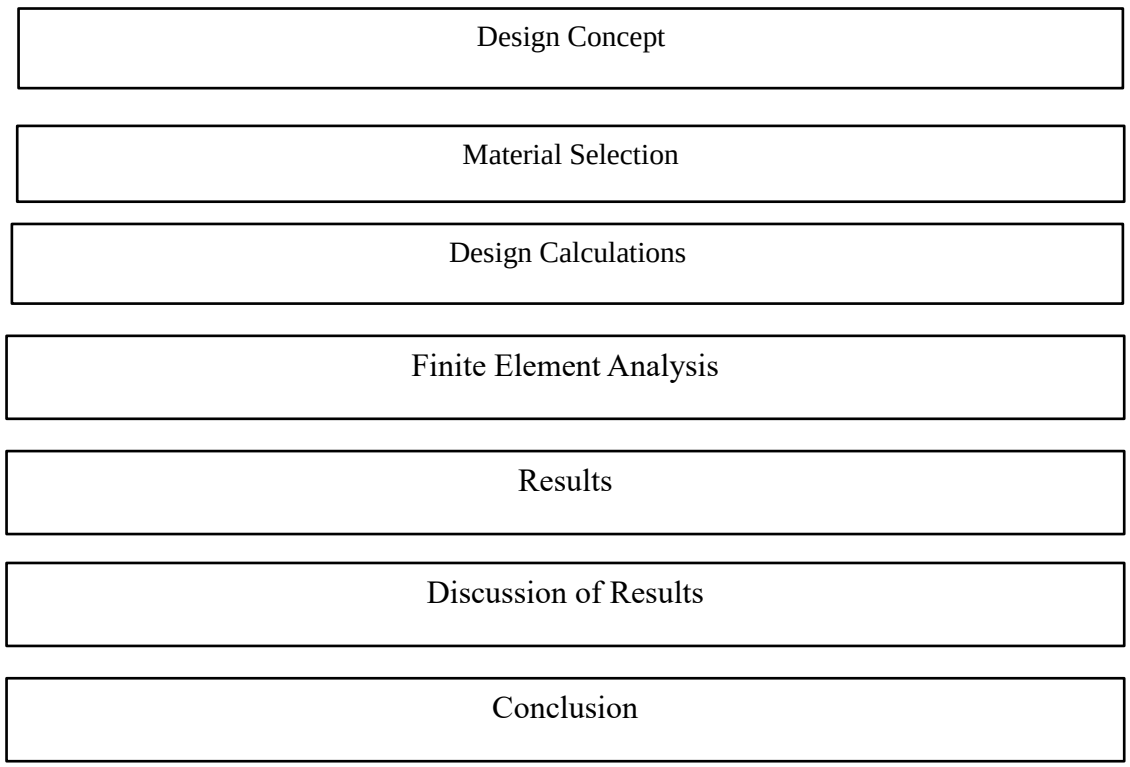

Figure 1. Method for shredder design

2.1 Design Concept

The design concept adopted is the dual shaft shredding mechanism where the loaded plastics is been shredded by the two sets of blades that rotate in opposite directions. The cutting blades are mounted on two parallel shafts and are typically made from high-strength steel. The blades

design is a hook-like shape that pulls the plastic waste into the cutting chamber and shreds it into small pieces.

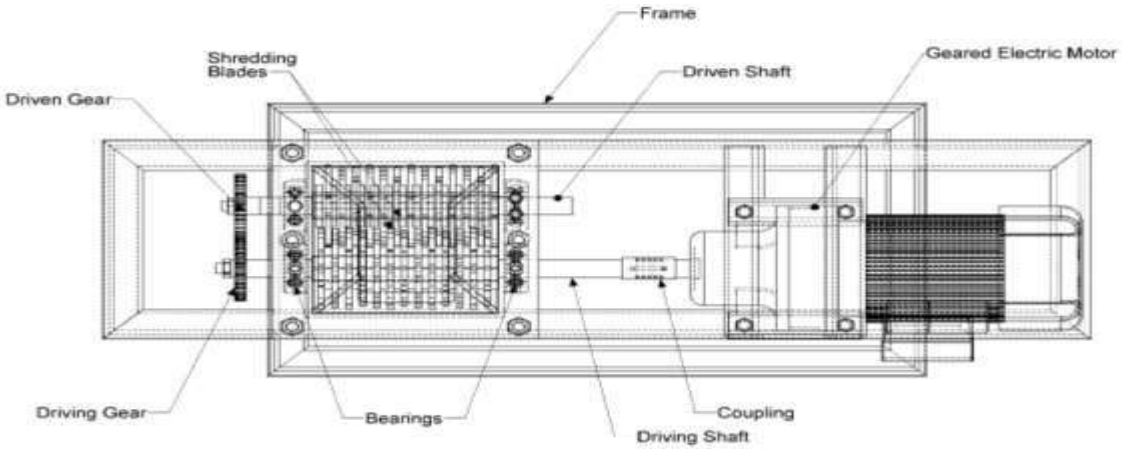

Figure 2. Design Configuration of a Plastic Shredder

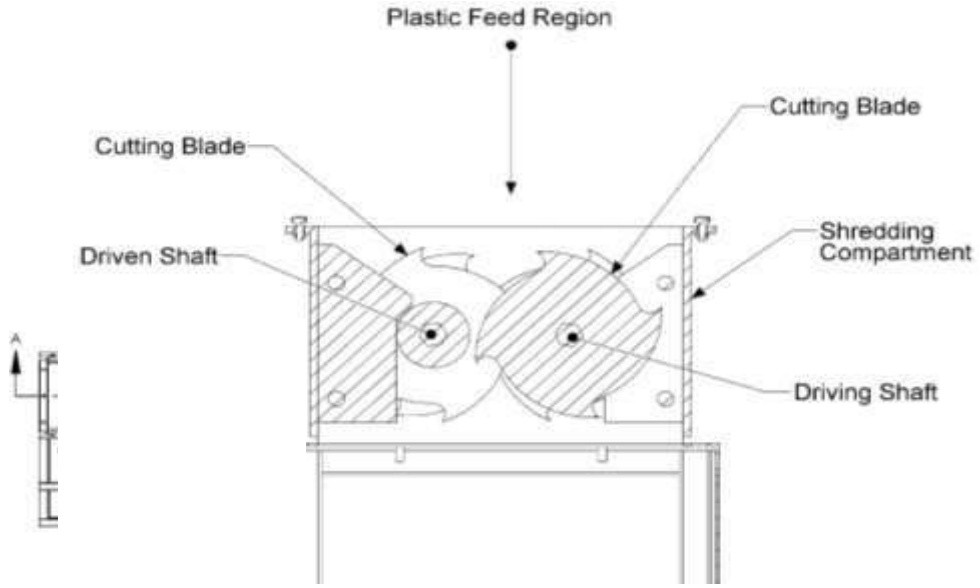

Figure 3. Sectional View of Design Configuration of a plastic shredder

3. Material Selection

Given that the cans to be crushed are made of PET plastics, a material known for its relatively low yield strength, the selection of suitable materials for the major components of the can-crushing machine holds paramount importance. Carbon steel and stainless steel emerge as compelling contenders due to their widespread availability, particularly in developing nations, and their demonstrated mechanical robustness that surpasses that of plastics. Stainless steel is able to withstand exposure to corrosive additives present in PET plastics without degrading its mechanical properties. Its high strength and durability during loading enable it to withstand high stresses and impacts involved in shredding of PET plastics without any form of

deformation. It also possesses significant wear resistance of the cutting edges due to abrasion during the shredding operations. Ease of clean and maintenance makes it a suitable choice of material that can help in minimizing downtime and contamination risk in the shredding operation. A striking balance between performance and cost makes stainless steel a viable operation for the shredder material choice.

The detailed CAD model drawn with SOLIDWORKS showing the isometric view, overall space occupied and exploded view are showed in Figures 4-6 respectively.

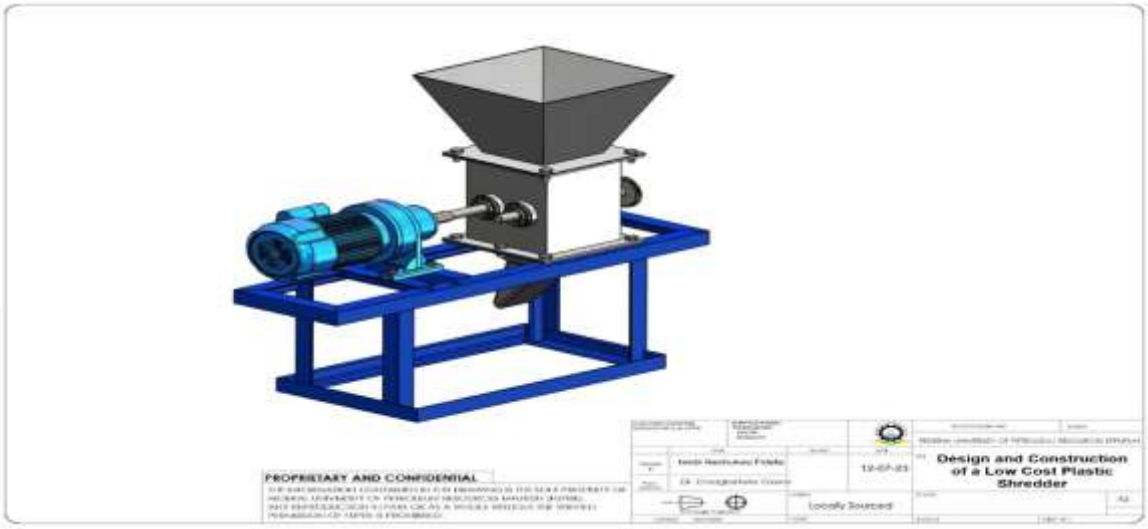

Figure 4. Isometric View

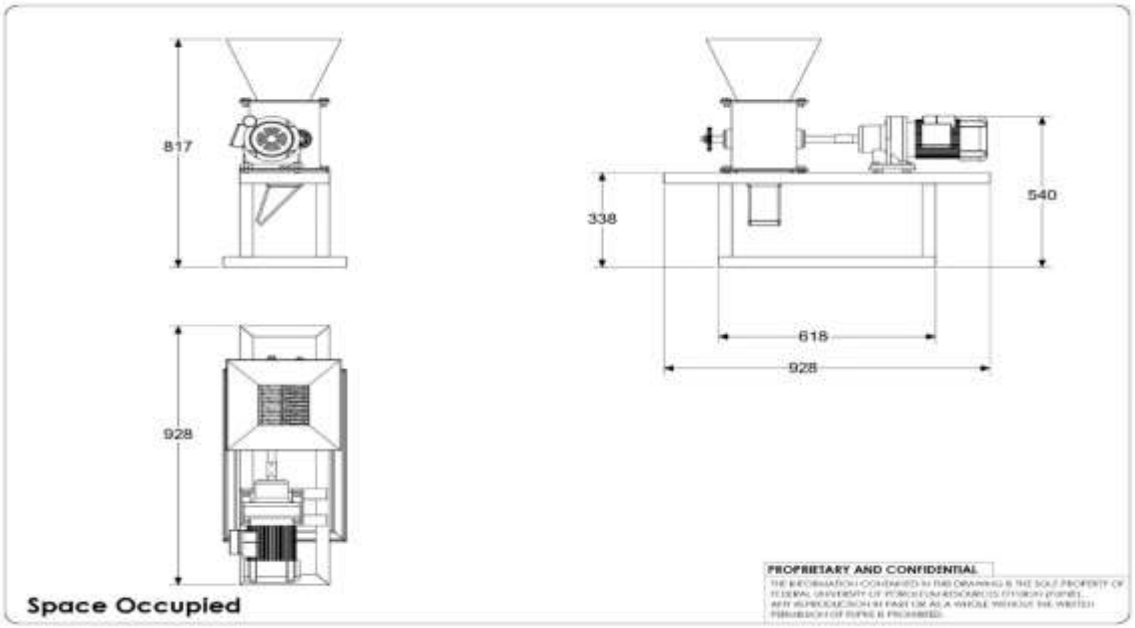

Figure 5. Overall Space Occupied by Machine

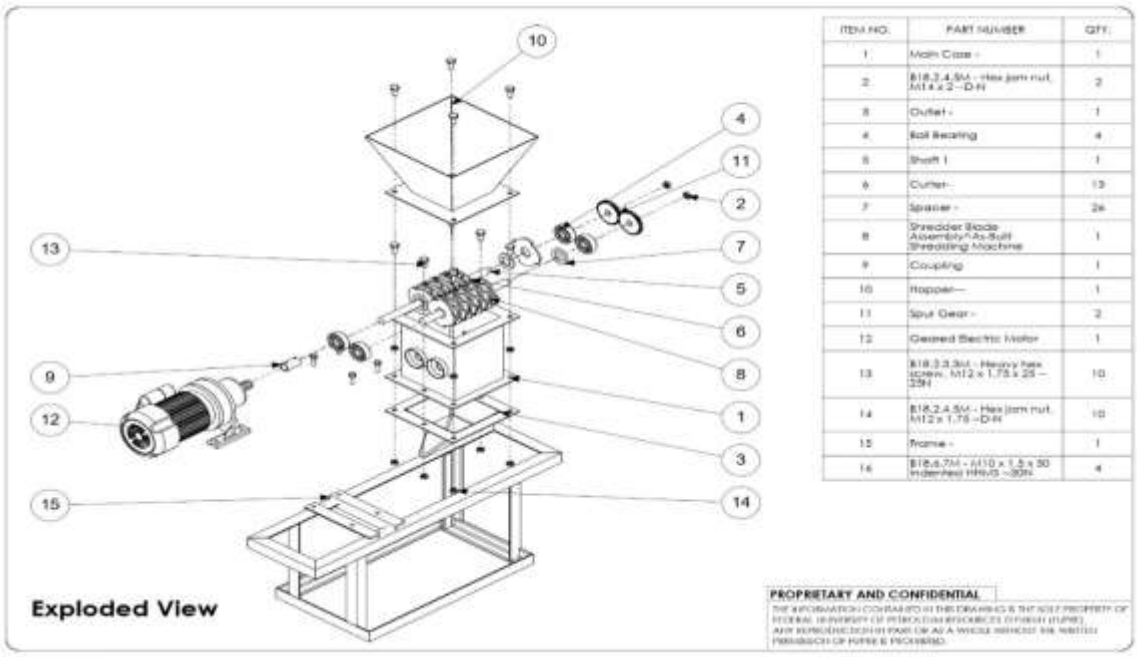

ITEM NO.	PART NUMBER	QTY.
1	Main Case -	1
2	B18.2.4.5M - Hex jam nut, M14 x 2 - D-H	2
3	Outlet -	1
4	Ball Bearing	4
5	Shaft 1	1
6	Cutter-	13
7	Spacer -	24
8	Shredder Blade Assembly^As-Built Shredding Machine	1
9	Coupling	1
10	Hopper—	1
11	Spur Gear -	2
12	Geared Electric Motor	1
13	B18.2.3.5M - Heavy hex screw, M12 x 1.75 x 25 – 2H	10
14	B18.2.4.5M - Hex jam nut, M12 x 1.75 - D-H	10
15	Frame -	1
16	B18.6.7M - M10 x 1.5 x 30 Indented HHUS – 2H	4

Figure 6. Exploded View

4. Design Calculations

4.1 Cutting Blade Design

The following assumptions are made regarding the blade design:

1. The blade is assumed to be uniformly thick throughout its length and width.
2. The blade is assumed to be new with no material removed due to wear and tear.
3. The blade is assumed to be rigid and non-deformable with no flexing or bending during the operation of the PET plastic shredding machine.
4. The radius of the blade is assumed to be negligible compared to the overall blaze size.
5. The blade material is assumed to be homogenous, having uniform material properties.
6. The blade geometry is assumed to be idealized with no irregularities.

Arunkumar et al., 2020 deduced the cutting area made by the edge of the blade as:

$$A_b = t \times W \quad (1)$$

Where $A_b$is the cutting area made by edge of the blade

t is thickness of cutting edge

W is width of cutting edge (For standard blade size)

$$A_b = 6mm \times 6mm = 36mm^2 = 0.000036m^2$$

According to Ma & Wang, 2021, the shear force acting on the blade

Shear strength of PET bottles = 51.71 MPa = 51710000 N/m^2

$$Shear\ strenth = \frac{Force}{Area} \quad (2)$$

$$Force = Shear\ strength \times Area = 51710000 \times 0.000036 = 1{,}861.56N$$

Torque exerting on the blade as well as shaft:

$$Torque = Force \times \text{Perpendicular distance (r)}$$

$$Torque = 1{,}861.56 \times 0.121 = 225.24Nm$$

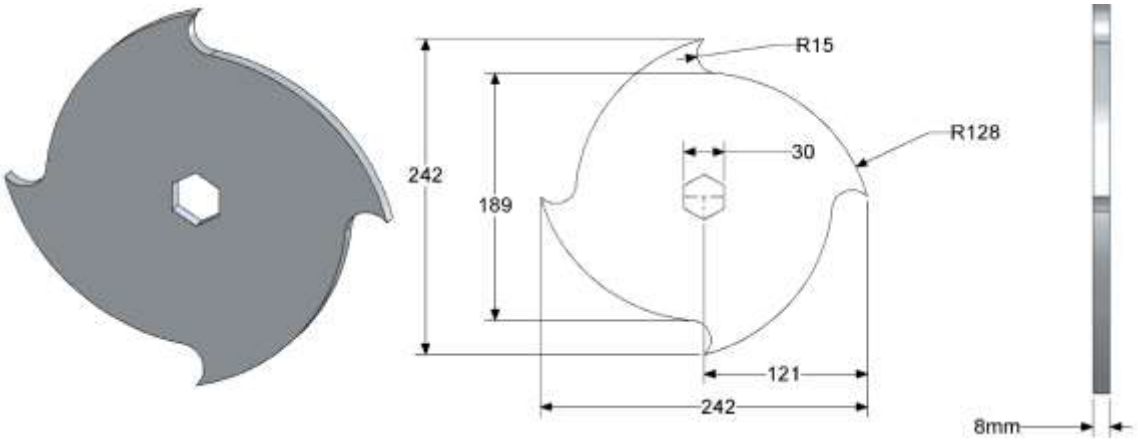

Figure 7. Cutting Blade Details

4.2 Power required by the shredder

According to Noroozian & Asgharian, 2017, the power required to effectively shred the plastic can be deduced using the formula:

$$P = \frac{2\pi N T_S}{60} \quad (3)$$

$Where\ P$ is the Power required

N is the shredding speed in rpm (70rpm, average speed of plastic shredding machine (*Precious Plastic Shredder - Open Source Ecology*, n.d.)

T_s is the torque required for shredding

$$P = \frac{2\pi \times 70 \times 225.24}{60} = \frac{99078.571}{60} = 1651.31W = 2.16\ hp \cong 2.2hp$$

5. Finite Element Analysis

By subjecting these critical components like the cutter blades (separately and integrated with the driving shaft), and main frame which carries the electric motor and shredding unit, the performance evaluation under various loads and operational conditions can be determined. Figure 8 shows the cutter blade model and Figure 9 shows the frame model.

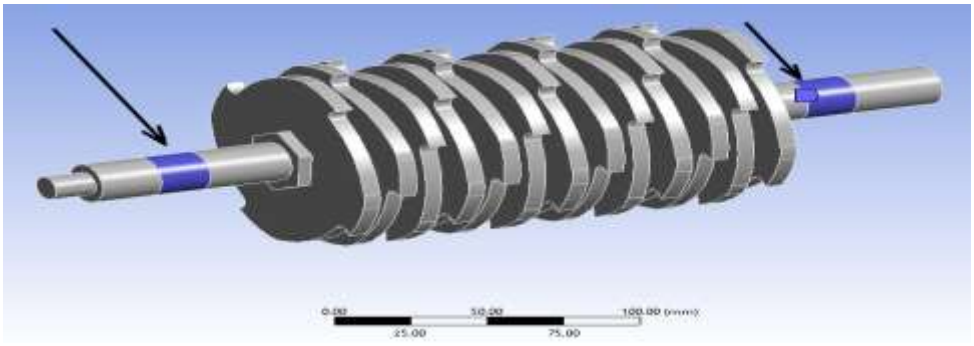

Figure 8. Cutter Blade Model

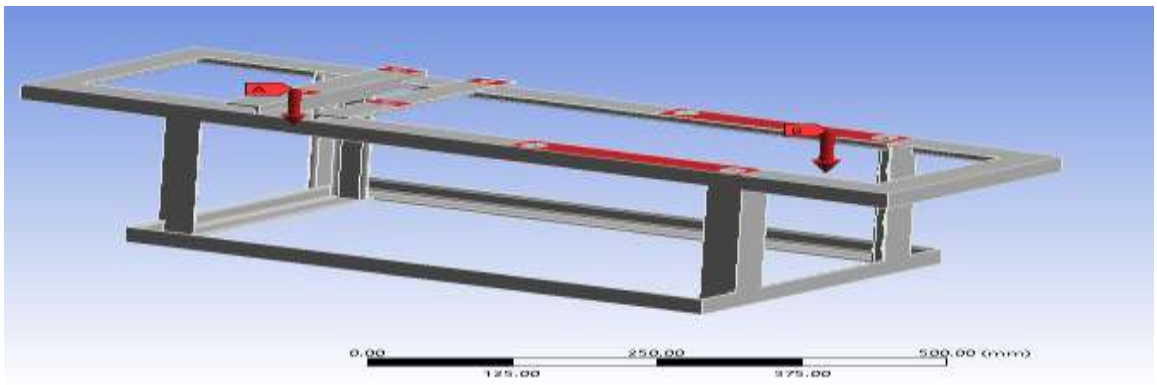

Figure 9. Simplified Frame Model

6. Results

6.1 Mesh Sensitive Analysis

To determine the optimal mesh size for the FEA study, the impact of varying mesh sizes on the simulation results was investigated. A preliminary study applying a moment equal to the torque of the electric motor (225Nm) was applied on a blade in the rotational direction of its real-life application and was conducted using four (4) different mesh sizes and the corresponding result in terms of stress acting on the cutter blade in MPa was compared to evaluate the discrepancies in the results. Figure 10 shows the mesh models with different mesh sizes. Table 1 shows the Stress result using the same loading condition but different Mesh sizes. Figure 11 shows the Stress at every Min. Mesh refinement size while Figure 12 shows the mesh model of the Cutter Assembly.

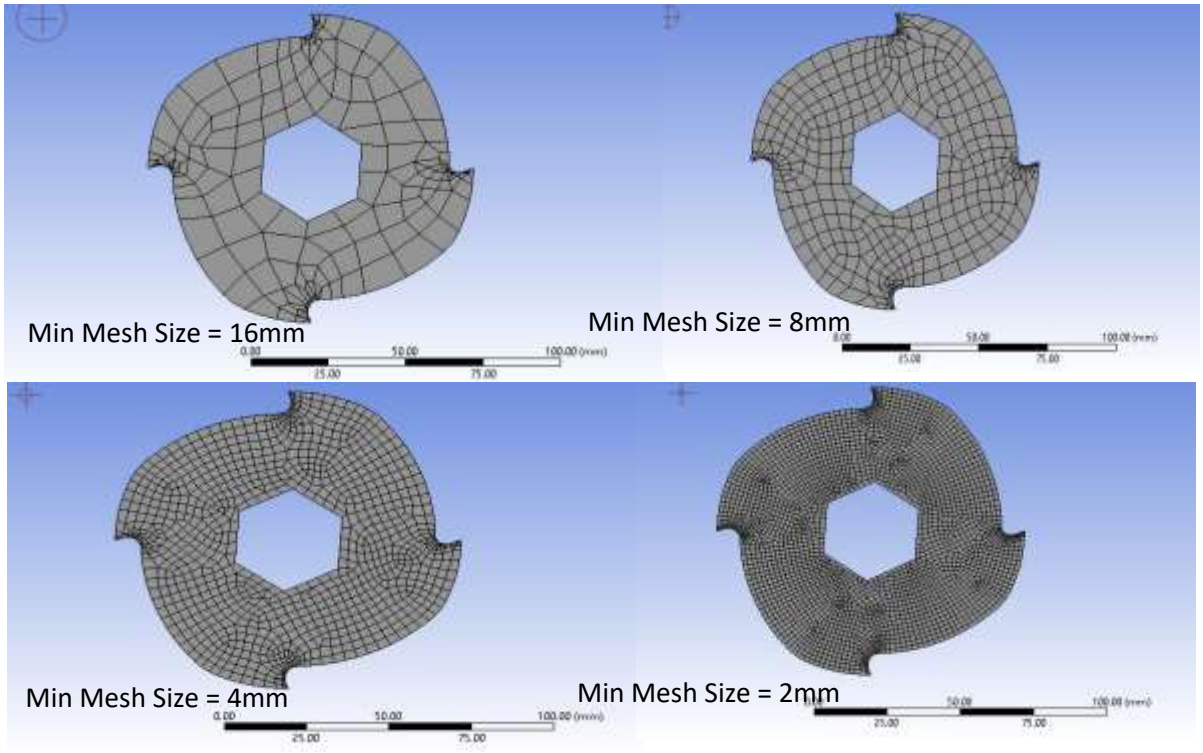

Figure 10. Mesh Model with different Mesh size

Table 2 Stress result using same loading condition but different Mesh sizes

Min. Mesh Size (mm)	Stress (MPa)
16	2.049
8	2.372
4	3.275
2	3.335
1	3.336
0.5	3.336
0.1	3.336

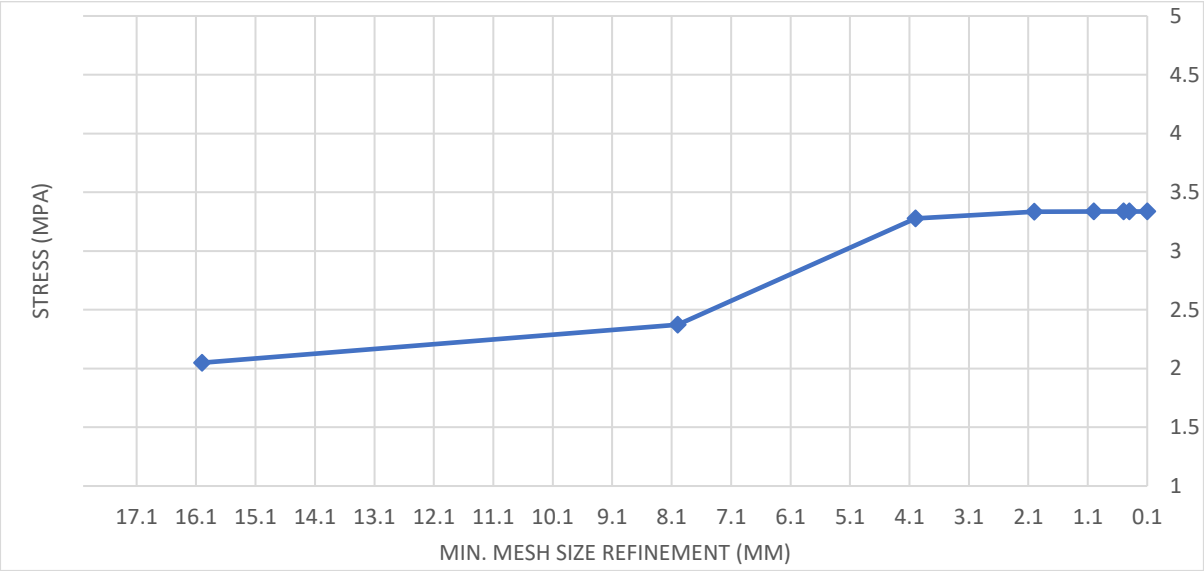

Figure 11. Graph showing Stress (MPa) at every Min. Mesh refinement size (mm)

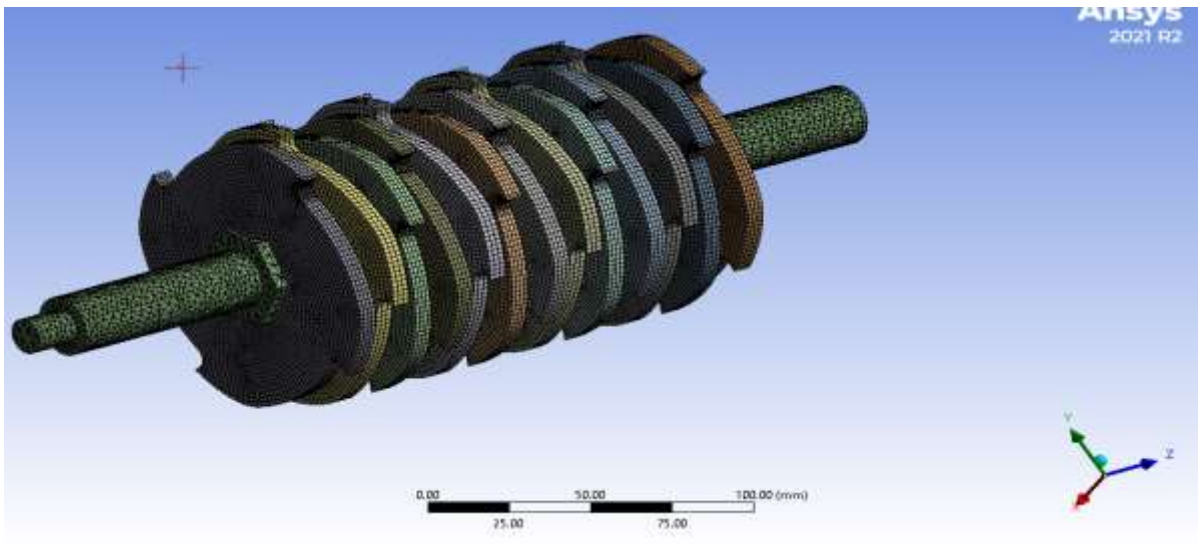

Figure 12. Mesh Model of the Cutter Assembly

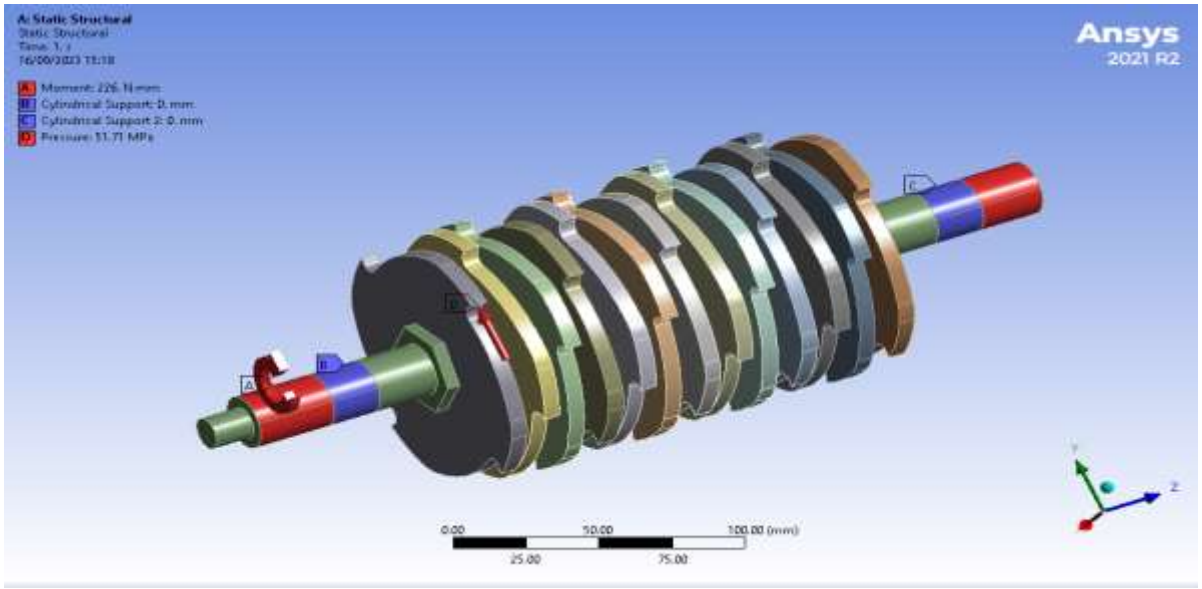

Figure 13. Cylindrical Constraint at the cylindrical faces of the shredder blade

A pressure equal to the shear stress (51.71MPa) of the plastic to be shredded and in the opposite direction as shown in Figure 13 to the applied torque was applied at the tips of some selected blades assumed to be the tips of the blades in contact with the plastics at a particular moment. Figure 14 shows the blade tips of shear stress application.

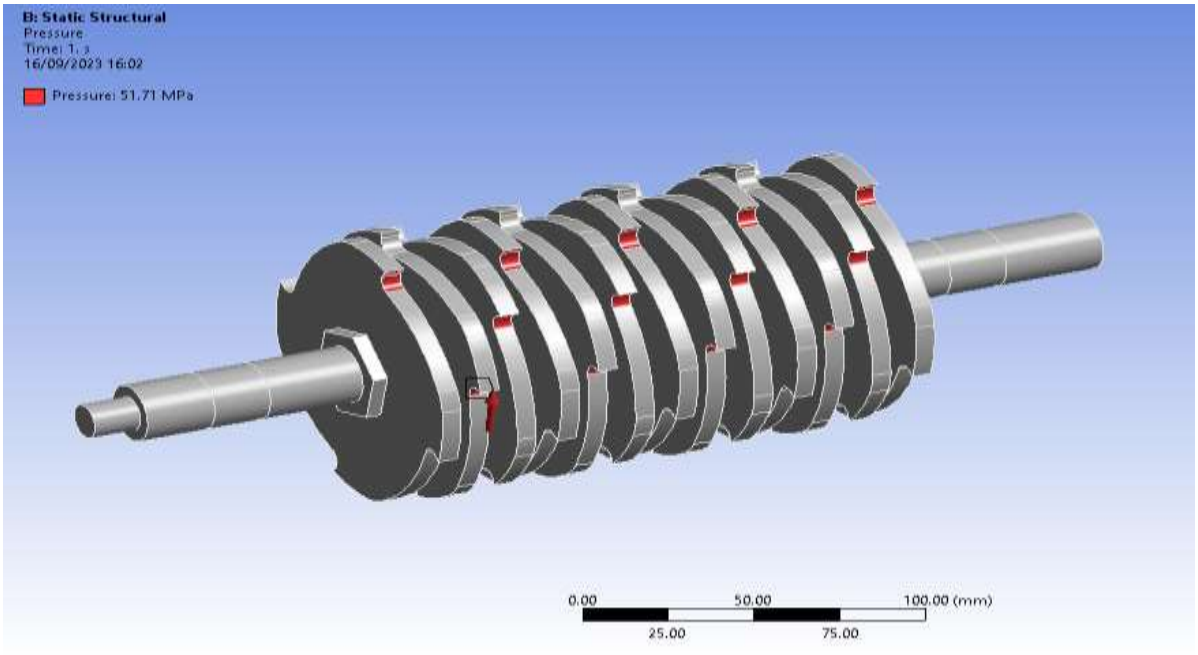

Figure 14. Highlight Blade Tips of shear stress application

6.2 Main Frame Setup

The estimated weight of the shredding unit from parametric data was applied at the position of C in Figure and a fixture support to the underneath base face of the frame demarcated as A.

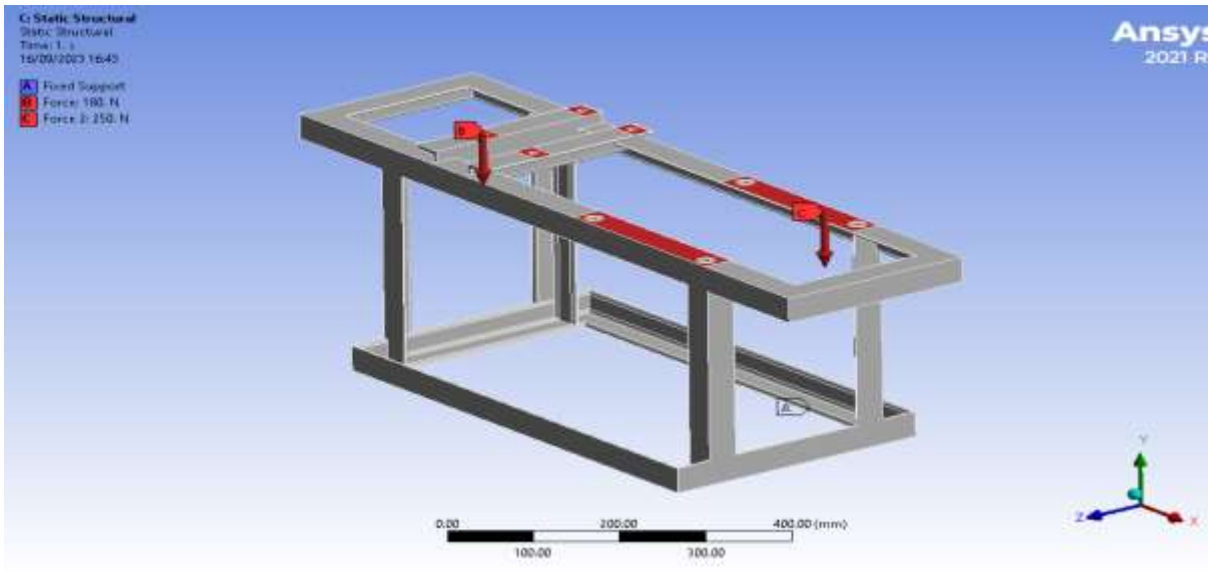

Figure 15. Main Frame Setup

The mesh setting adopted for the main frame after the discrepancy study is a 6mm global mesh size and a 1.5mm size for the cylindrical faces where both the motor and shredding unit are mounted. Figure 16 shows the mesh model of the main frame while Figure 17 indicates the deformation distribution on the main frame**.**

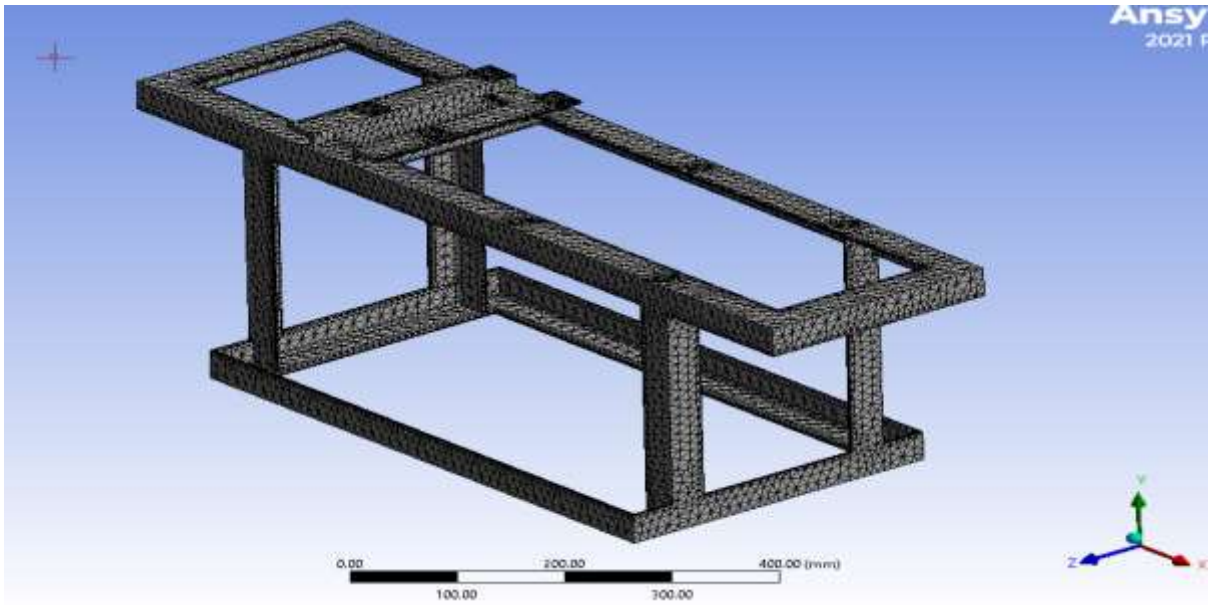

Figure 16. Mesh Model of the Mainframe

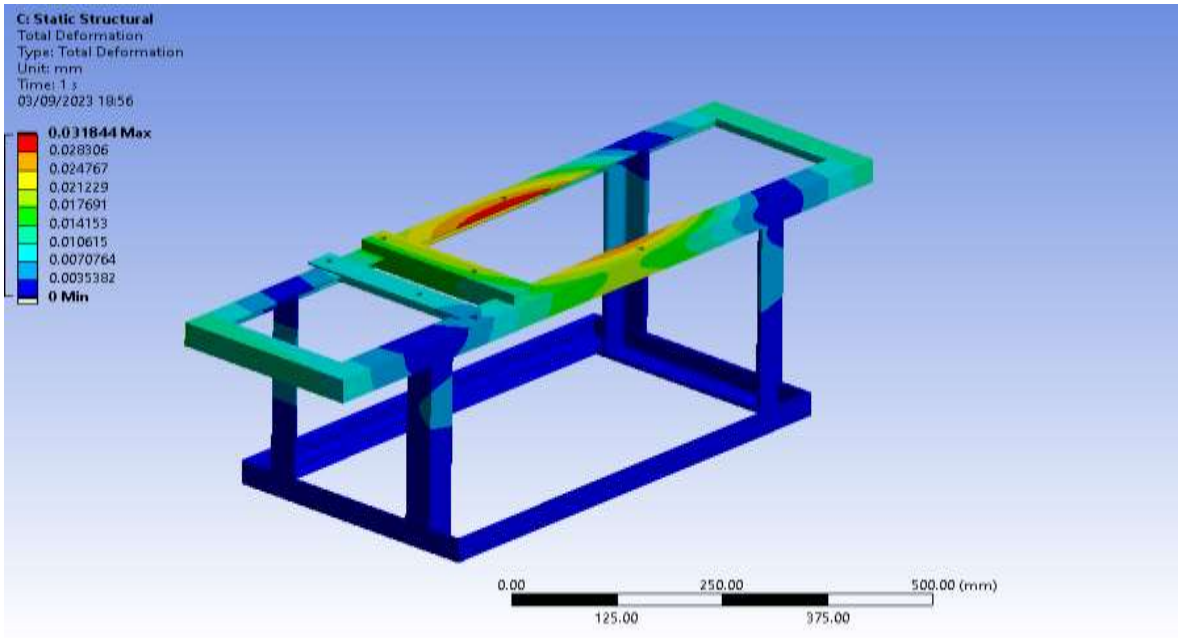

Figure 17. Deformation distribution on the main frame

Results from the static study of the main frame are imported to the model and harmonic response study for the Simulation on ANSYS Workbench. Figure 19 shows the von Mises Stress Distribution on the Cutter Blade Assembly.

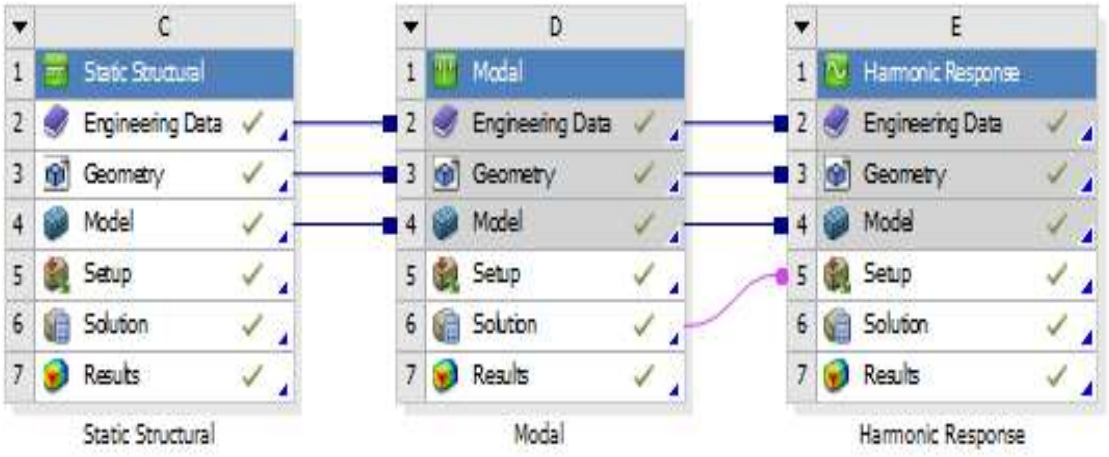

Figure 18. Simulation Setup on ANSYS Workbench

Table 2. Simulation Result of the cutter blades assembly

Mechanical Behaviour	Value
Maximum von Mises Stress	28.7 MPa
Maximum displacement	0.033mm
Maximum Shear Stress	6.97MPa
Min FOS	8.71

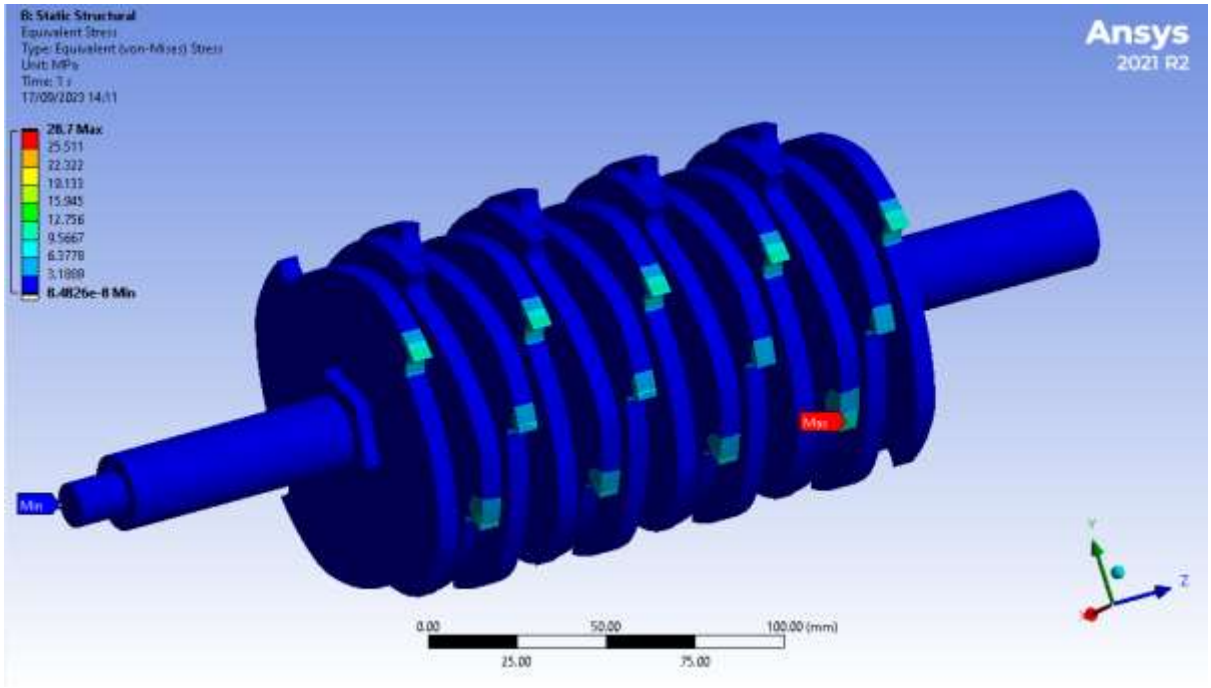

Figure 19. Von Mises Stress Distribution on the Cutter Blade Assembly

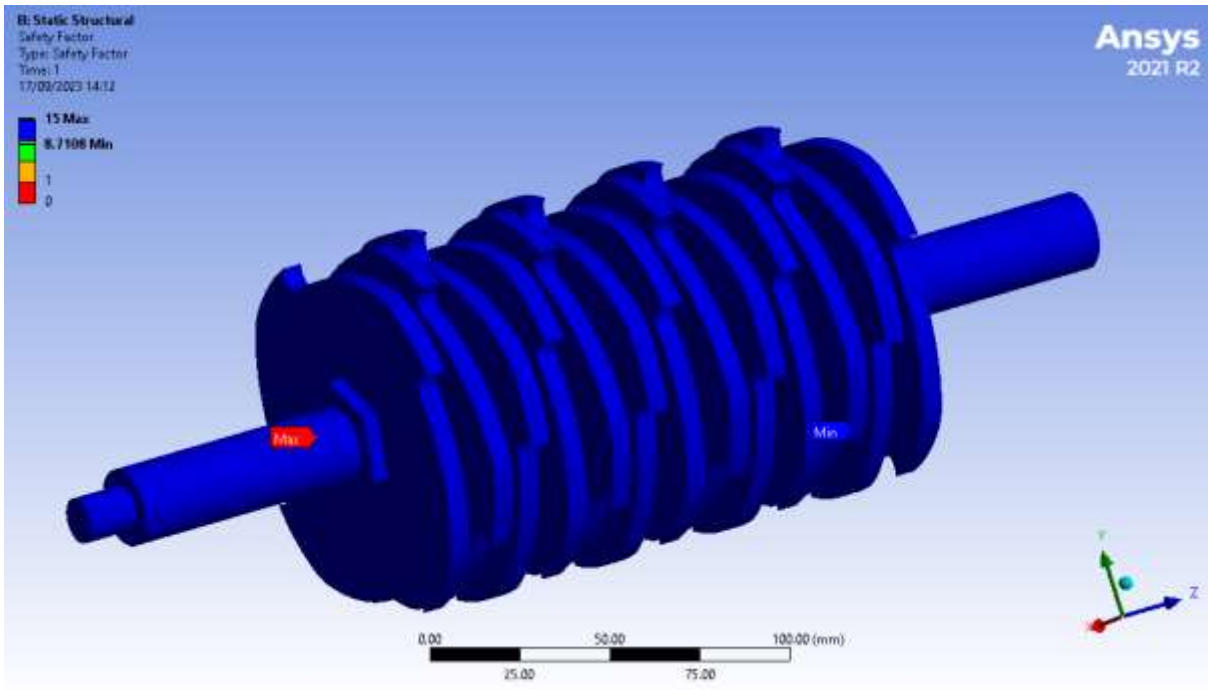

Figure 20. FOS Distribution on the Cutter Blade Assembly

The minimum Factor of Safety (FOS) as shown in Figure 20 was obtained as 8.71 which indicates a substantial margin of safety, signifying that the blade assembly is designed with a substantial safety cushion, well above the critical threshold. These results collectively affirm the robustness and reliability of the cutter blade assembly under the anticipated operational conditions, providing confidence in its ability to perform its shredding function effectively while maintaining structural integrity.

6.3 Modal Analysis on the Slider Link

The modal analysis revealed important details about its vibrational properties and modes of deformation of the main frame are summarised and shown in Table 3. The respective modal analysis was shown in Figures 21a-f.

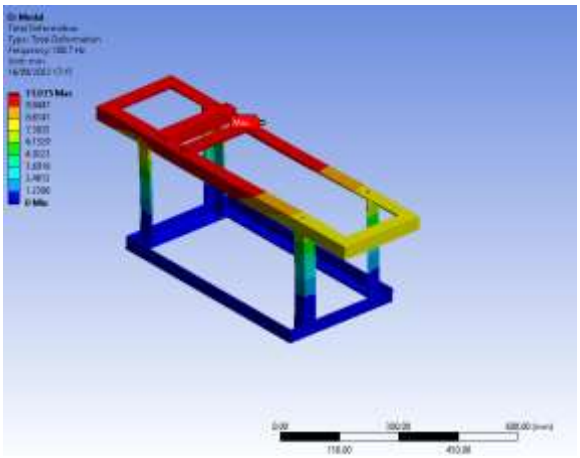

Figure 21 a. At Mode 1 = 100.7 Hz

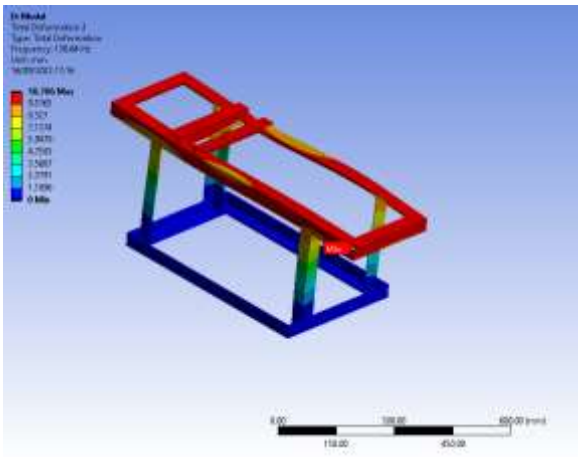

Figure 21b. At Mode 2 = 130.64 Hz

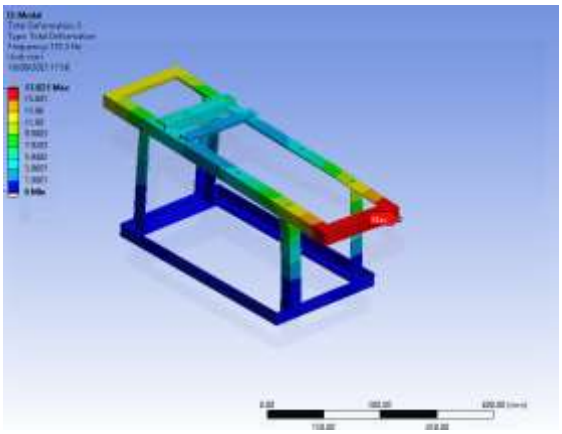

Figure 21c. At Mode 3 = 131.13 Hz

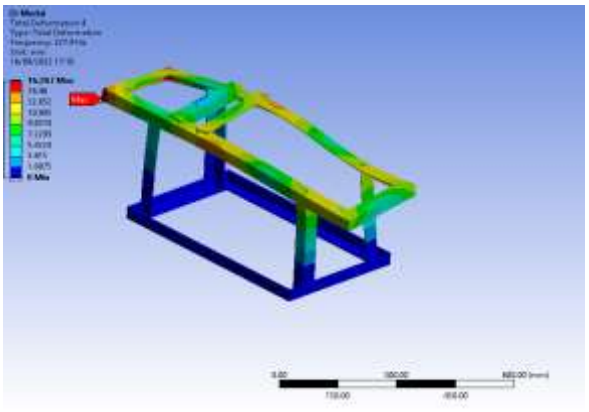

Figure 21d. At Mode 4=227.9Hz

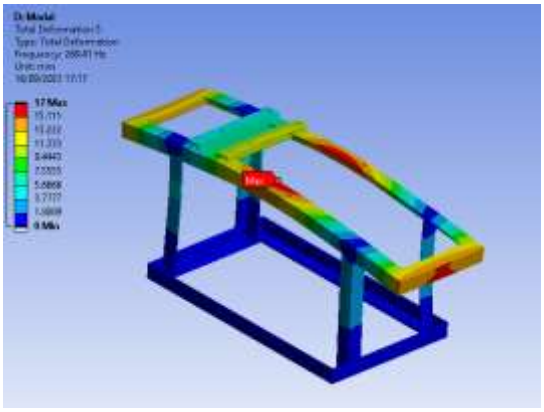

Figure 21e. At Mode 5 = 269.41 Hz

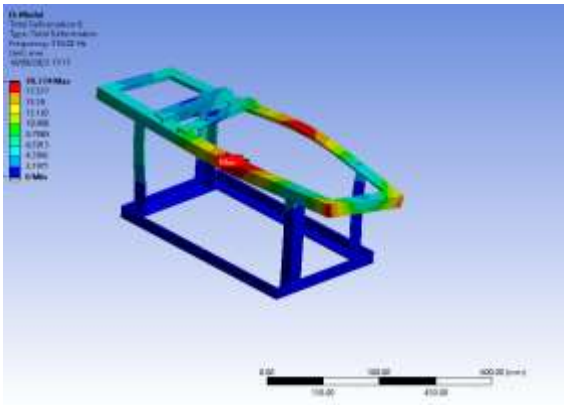

Figure 21f. At Mode 6 = 318.02 Hz

Table 3. Summary of modal analysis

Mode	Natural Frequency	Position of Maximum deformation	Position of Minimum deformation
Mode 1	100.7 Hz	Geared Motor seat	Lower base of main frame
Mode 2	130.64 Hz	Upper members of the main frame	Lower base of main frame
Mode 3	131.13 Hz	Right side of shredding Unit sitting frame	Lower base of main frame
Mode 4	227.9 Hz	Left side of shredding Unit sitting frame	Lower base of main frame
Mode 5	269.41 Hz	Mid and side of shredding Unit sitting frame	Lower base of main frame
Mode 6	318.02 Hz	Mid member of shredding Unit sitting frame	Lower base of main frame

The corresponding harmony frequency response for the stress, and displacement are shown on Figures 22-23.

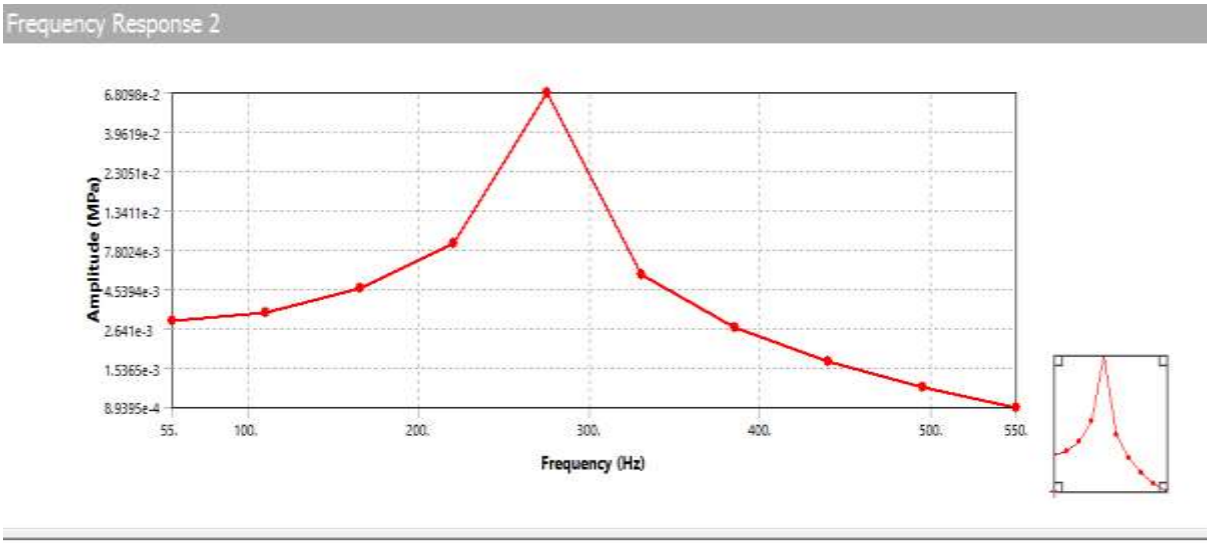

Figure 22. Harmonic Frequency Response and corresponding Stress

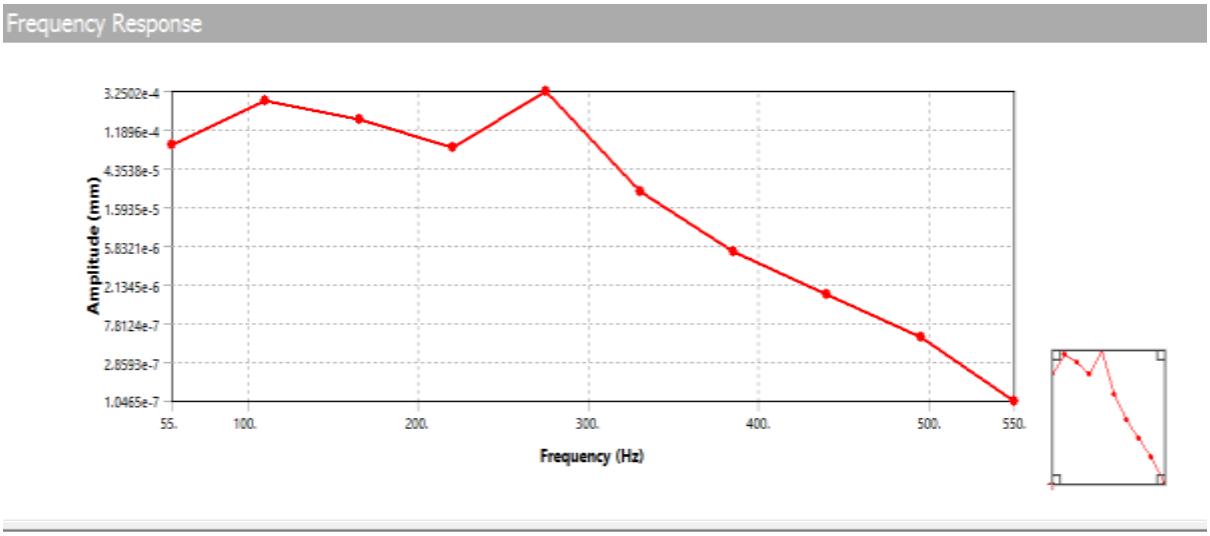

Figure 23. Harmonic Frequency Response and corresponding Deformation

According to David & Joel, 2018:

Shredding Rate = $\frac{Mean\ Weight\ in\ kg}{Mean\ time}$ (4)

=3.1/36.23=0.0856kg/sec

Table 4. Test result for shredding PET plastic cans weighing 310g each

PET plastics	**Test 1**	**Test 2**	**Test 3**	**Mean**
Mean Weight of PET plastic(g)	3102	3101.5	3101.5	3101.67
Mean Shredding time (sec)	37.4	35.8	35.5	36.23
Mean of shredded plastic(g)	3102.4	3105.1	3101.5	3103

The results from shredding 10 PET cans weighing about 310 g each are shown above with a shredding rate of 0.0856kg/sec

7. Conclusion

The compact plastic shredding machine developed as a practical response to the challenges earlier established in the problem statement, seeking to reduce PET waste into smaller granules and other forms suitable for pelletizing and various applications as raw materials for new plastic products has been satisfied according to the aims and objectives of this research. Throughout practical testing, the constructed shredding machine demonstrated a throughput of 3.1kg in an average time of 36.23s, a remarkable achievement in reducing plastic waste and contributing to a sustainable, circular economy. Ravi and Kumar (2019) designed a plastic shredder with the following features:

- shredding capacity: 1050kg/h
- Energy Consumption: 32KW± 3Kw
- Material: PET

Comparing the above results with the result of this test showed a significant improvement for a miniaturized plastic shredder. Beyond the goal of waste reduction, PET plastic shredding machine has the following impact:

1. **Economic Impact**
   - **i.** Plastic shredding operations can serve as an employer of labour in the recycling industry from machine operations to sorting and processing.
   - **ii.** Shredded PET plastics can be used as raw materials for new products, decreasing the dependency on virgin materials from petroleum products and conserving resources in the process.
   - **iii.** Energy can be conserved from recycling PET plastics as opposed to producing new plastics from raw materials.

iv. Consistent supply of shredded plastics can boost the development of new markets and products.

2. Environmental Impact

i. Recycling plastics reduces, if not eliminates the need for need for raw materials extraction and processing, thereby conserving resources.
ii. Reduction of energy consumption leading to lower greenhouse gas emissions.
iii. Reduction in pollution through recycling.
iv. Littered plastics in the environment will be reduced.
v. The quality of air is improved due to the reduced need for incineration
vi. The need for landfills is reduced due to recycling of plastics and this will further result in soil conservation and erosion reduction.

8. Recommendation

The following are some recommendations for further research to improve the efficiency of PET plastic shredding machines:

i. **Sensor integration:** Integration of sensors to detect material variations, and machine performance and optimize shredding conditions in real time.
ii. **Machine Learning (ML) and Artificial Intelligence:** Prediction of maintenance needs, assessment, and improvement of overall machine efficiency are some of the functions AI and ML algorithms can perform on the PET plastic machine.
iii. **Enhanced Cooling Systems** can be incorporated with cooling methods using air or water to prevent overheating and prolong the machine's lifespan.
iv. **Integration with downstream processes:** To develop a comprehensive recycling solution, investigate seamless connection with further recycling procedures like washing, drying, or pelletizing.

References

Arunkumar, P. M., Priyadharsini, S., Akesh, R., Dharun, M., Gokul, M., & Gokul Pradeep, K. S. (2020). Fabrication of paper cutting machine using eye mark sensor. *IOP Conference Series: Materials Science and Engineering*, *993*(1). https://doi.org/10.1088/1757-899X/993/1/012142

Aryani, N., Buchori, D., & Setiawan, A. B. (2019). Design of a plastic shredder machine. *IPTEK Journal of Proceedings Series*, (3), 35-39

Awaja, F., & Pavel, D. (2005). Recycling of PET. *European polymer journal*, *41*(7), 1453 1477.

David, A., & Joel, O. O. (2018). Design and construction of a plastic shredder machine for recycling and management of plastic wastes. *International Journal of Scientific & Engineering Research*, *9*(5), 1379-1385.

Elehinafe, F. B., Komolafe, T. C., Beture, O. C., & Babalola, O. A. (2021). Waste Polyethylene Terephthalate Packaging Materials in Developing countries–Sources, Adverse Effects, and Management. *Ecological Engineering & Environmental Technology*, *22*.

Moore, C. J. (2008). Synthetic polymers in the marine environment: a rapidly increasing, long-term threat. *Environmental research*, *108*(2), 131-139.

Ogunola, O. S., Onada, O. A. & Falaye, A. E. (2018). Mitigation measures to avert the impacts of plastics and microplastics in the marine environment (a review). *Environ. Sci. Pollut. Res.* 25, 9293–9310. doi: 10.1007/s11356-018-1499-z

Precious Plastic Shredder - Open-Source Ecology. (n.d.). Retrieved May 1, 2023, from https://wiki.opensourceecology.org/wiki/Precious_Plastic_Shredder

Ravi, R. &Kumar, P. (2019). Energy Consumption Analysis of Plastic Shredding Machines. Energy Efficiency in Industry, 10(1), 1-10.

Rahmani, E., Dehestani, M., Beygi, M. H. A., Allahyari, H., & Nikbin, I. M. (2013). On the mechanical properties of concrete containing waste PET particles. *Construction and Building Materials*, *47*, 1302-1308.

Ravi, R. & Kumar, P. (2019). Energy Consumption Analysis of Plastic Shredding Machines. Energy Efficiency in Industry, 10(1), 1-10.

Zhou, Y., Shan, Y., Guan, D., Liang, X., Cai, Y., Liu, J., & Yang, Z. (2020). Sharing tableware reduces waste generation, emissions and water consumption in China's takeaway packaging waste dilemma. *Nature Food*, *1*(9), 552-561.