Journal of Basic Physical Research ISSN: 2141-8403 Prints, 2141-8411 Online
Vol.12, Issue 2, October, 2024, pp. 1 - 11. Available online at https://journals.unizik.edu.ng/jbpr/

AN EFFICIENT ENERGY-MANAGEMENT SYSTEM WITH IOT SENSORS FOR AUTONOMOUS APPLICATIONS.

[1]Aniakor I. Oluchukwu, [2]Ejiofor V. Ebere, [3] Mbonu E. Samuel, [4]Azubogu O. Philip,

[1&2]Department of Computer Science, Faculty of Physical Sciences, Nnamdi Azikiwe University, Awka, Nigeria. ifyoly@gmail.com. & [2]ve.ejiofor@unizik.edu.ng.
[3]Department of Mechatronics Engineering, School of Electrical Systems Engineering and Technology, Federal University of Technology, Owerri, Nigeria. Ekene.Mbonu@futo.edu.ng [4]ICT Unit, Procurement Dept., Nnamdi Azikiwe University, Awka. op.azubogu@unizik.edu.ng, gent4real69@gmail.com

Abstract
The Internet of Things (IoT) is a rapidly growing technology that has the potential to revolutionize many industries. However, the energy consumption of IoT devices at the physical layer is a major challenge that needs to be addressed. This paper proposes a novel energy-efficient consumption model with cloud-based controllers for perception layer data acquisition and storage in IoT applications. In the methodology, mathematical representation of the non-optimized energy consumption of physical layer components was first developed before developing the optimized version. The mathematical models were then implemented in software using embedded C language, a hybrid of assembly, C and C++ languages. The developed software was implemented using ATMEGA 2560 as a target microcontroller with IoT sensors interfaced to it. The system was simulated using proteus professional software. Results show that the optimized algorithm developed brought 54.75% in improvement in energy consumption of physical layer components in IoT autonomous applications. Further study shall focus on the application of the models developed in this work in cloud-based applications where security is a concern.
Keywords: *energy management, IoT sensors, energy optimization, cloud-based applications, optimized algorithm*

Introduction

The escalating demand for energy, coupled with the growing complexity of autonomous systems, has spurred the development of innovative energy management strategies. A promising approach lies in leveraging the Internet of Things (IoT) to create efficient energy management systems (EEMS) that can optimize energy consumption in various autonomous applications. By integrating a multitude of sensors and employing intelligent algorithms, EEMS can autonomously adapt to changing conditions and minimize energy waste [1]. This research aims to address the limitations of existing approaches by developing an EEMS that is capable of autonomously managing energy consumption in a variety of autonomous applications. The proposed system utilizes a priority-based control mechanism to determine which sensors should remain active at any given time, ensuring that only the most critical sensors are operational. By strategically arranging sensors and employing advanced algorithms, the EEMS can significantly reduce energy waste while maintaining the desired functionality of the autonomous system [2].

Methods

The research methodology adopted is Simulation Research Methodology. In the development of the Efficient Energy-Management System (EEMS), simulation is used to model and test system performance under various conditions. This method allows researchers to optimize energy consumption and sensor use without physical deployment, demonstrating potential energy savings and operational efficiency. Simulation results guide system design refinement and future development. The following tools were used: IoT Sensors, Simulation Software (e.g., MATLAB, Simulink), Data Analytics Platforms (e.g., TensorFlow, Scikit-learn), Energy Management Software, Development Frameworks (e.g., Node-RED).

Related Works

The quest for energy efficiency and the burgeoning field of autonomous applications have catalyzed the exploration of innovative energy management systems (EMS) that leverage the capabilities of the Internet of Things (IoT). This review delves into pertinent research endeavors, focusing on the synergy of IoT sensors, priority-based control mechanisms, and advanced algorithms in crafting energy-efficient solutions for autonomous systems.

Previous research has explored the potential of IoT sensors for energy management in different domains. For instance, [1] demonstrated the effectiveness of using IoT sensors to monitor energy consumption in residential buildings, identifying areas for improvement. Similarly, [2] proposed a sensor-based EEMS for smart grids, enabling real-time optimization of energy distribution. However, these studies primarily focused on specific applications and did not delve into the broader challenges of developing a versatile and efficient EEMS for autonomous systems.

IoT Sensors in Energy Management

The literature abounds with investigations into the role of IoT sensors in energy conservation across various domains [1]. These sensors, acting as the system's eyes and ears, furnish real-time data on environmental parameters, occupancy patterns, and resource utilization [2]. Motion detectors, light sensors, and temperature sensors have been widely deployed to enable context-aware energy management strategies [3]. Studies have consistently highlighted the efficacy of IoT-enabled EMSs in curtailing energy wastage and optimizing consumption in both residential and commercial settings [4].

Priority-Based Control Mechanisms

The notion of prioritizing sensor operations based on situational relevance has emerged as a pivotal theme in energy-efficient EMS design [5]. By dynamically adjusting the active sensor set in response to evolving needs, these mechanisms strike a balance between functionality and energy conservation [6]. Researchers have explored diverse priority assignment strategies, incorporating factors like criticality, data relevance, and energy constraints [7]. The implementation of priority-based control has yielded promising results in curtailing redundant sensor operations and enhancing overall system efficiency [8].

Advanced Algorithms and Decision-Making

The marriage of IoT-driven EMSs with advanced algorithms empowers intelligent decision-making and adaptive energy management [9]. Machine learning and artificial intelligence techniques have been leveraged to glean insights from sensor data, predict energy demands, and proactively optimize resource allocation [10]. The literature showcases the potential of such algorithms in learning user behaviors, anticipating environmental changes, and tailoring energy management strategies accordingly [11].

Conclusion of Review and Future Directions

The body of research reviewed herein underscores the transformative potential of IoT-powered EMSs in enabling energy-efficient autonomous applications. The synergy of IoT sensors, priority-based control, and intelligent algorithms paves the way for a paradigm shift in energy management, transcending traditional approaches. Future research endeavors may explore the integration of renewable energy sources, energy harvesting techniques, and distributed control architectures to further amplify the impact of these systems. As autonomous technologies continue to proliferate, the pursuit of energy-efficient solutions remains paramount in ensuring their sustainability and environmental responsibility.

Energy Challenges in Autonomous Applications

The rise of autonomous applications, encompassing self-driving vehicles, drones, and robots, heralds a new era of technological advancements. However, their widespread adoption and effectiveness are significantly constrained by the pressing challenge of energy consumption [1]. Autonomous systems, with their reliance on an array of sensors, processors, and actuators, demand substantial power resources [2]. This reliance often outstrips the capabilities of conventional energy sources, such as batteries, thereby limiting operational range and duration [3]. Furthermore, the dynamic and unpredictable nature of autonomous tasks introduces additional energy complexities [4]. Unexpected scenarios, environmental fluctuations, and increased computational demands can lead to rapid energy depletion, compromising mission success and safety [5]. Addressing these energy hurdles necessitates innovative solutions across multiple fronts. Advancements in energy-efficient hardware, intelligent power management algorithms, and the exploration of alternative energy sources, including solar and fuel cells, are vital to unlocking the full potential of autonomous applications [6].

Mathematical Model for Efficient Energy Consumption Management with IoT Sensors in Autonomous Applications

Energy consumption management is crucial for IoT sensors in autonomous applications, especially in remote battery-powered scenarios. This section considers the development of mathematical model that represents the energy consumption of a typical IoT system at the perception layer (PL). The model begins by analyzing the power and energy consumption of each component in the PL setup including sensors, analog-to-digital converters (ADCs), cloud-based controllers, and IoT gateways. The analysis reveals that without energy management, consumption is high and unsustainable for battery-powered devices. To address this, an energy management function, lambda ($\boldsymbol{\lambda}$) is introduced. This function classifies each PL component as of high, mid, or low priority, based on their role in the IoT application. High-priority sensors trigger time-critical events, mid-priority sensors monitor thresholds, and low-priority sensors collect essential data that are not time critical. The IoT gateway is only activated only during data transmission.

By applying $\boldsymbol{\lambda}$ to the power consumption model, we can break down the total consumption into the consumptions of each sensor type and the gateway. This allows us to optimize energy usage by strategically controlling the activation and operation of each component. The optimized energy consumption model takes into account the time duration each component is active, allowing for precise control and significant energy savings. This model is essential for developing optimized and efficient energy management algorithms for PL in IoT applications, ensuring longer battery life and sustainable operation in remote environments.

The Theoretical Framework of the Mathematical Model

Consider a typical perception layer set-up in IoT autonomous application as shown in figure 1. The components of the setup are:

1. The power supply unit which provides energy in form of current and voltage to the entire system.
2. The sensors which help the cloud-based controller to perceive or sense the physical environment. The sensors are transducers to convert the physical quantities to be measured into equivalent voltage or current signals.
3. The analog to digital converter (ADC) transforms the measured physical analogue quantity to its digital equivalent.
4. The cloud controller collects the digital data, processes them and transmit to the cloud via the IoT gateway.

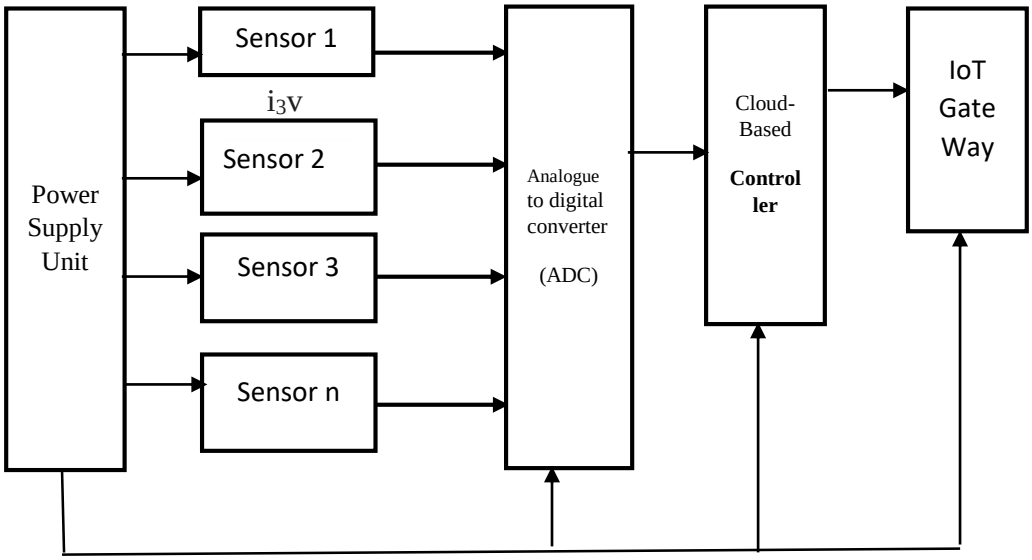

Figure 1: Typical perception layer setup in IoT application

Now, mathematically, power P is defined as the product of current I and voltage V. This implies that

$$P = I * V \quad (1)$$

Electrical Energy E on the other hand is defined as the product of power and time T. It implies that

$$E = I * V * T \quad (2)$$

It is a standard practice for perception layer components to operate at the same level of voltage. The current may differ depending on the power consumption of each component. This makes for compatibility. It is a standard for internet of things (IoT) design. Now, with respect to figure 1 let the current rating of sensor 1 be i_1 , the current rating of sensor 2 be i_2 , the current rating of sensor 3 be i_3,the current rating of sensor n be i_n , the current rating of the ADC be i_{adc}, the current rating of the cloud-based controller be i_{cc} , the current rating of the IoT gateway be i_g. The total power consumption P_T of the entire perception layer setup can then be written as:

$$P_{T=}\ i_1\ *V + i_2\ *V + i_3\ *V + i_n\ *V + i_{adc}\ *V + i_{cc}\ *V\ + i_g\ *V$$
$$P_T\ = (\sum_{n=1}^{n}(\mathrm{i} * \mathrm{v})\ ) + i_{adc}\ *V + i_{cc}\ *V\ + i_g\ *V \quad (3)$$

Similarly, the total energy consumption E_T of the entire Setup can be written as

$$E_{T=}\ i_1\ *V*t + i_2\ *V*t + i_3\ *V*t + i_n\ *V*t + i_{adc}\ *V*t + i_{cc}\ *V*t\ + i_g\ * V*t$$
$$E_T\ = \big((\sum_{n=1}^{n}(\mathrm{i} * \mathrm{v})\ ) + i_{adc}\ *V + i_{cc}\ *V\ + i_g\ *V\big) * t \quad (4)$$

Where t is the total on duration time of the perception layer unit.

Equation 4 is a case of zero energy management. In other words, there is no energy management at all. This situation is not desirable given that IoT at perception layer is mostly situated at remote locations, so most times it is battery powered. It is therefore necessary to introduce energy management in equation 4 so as to optimized energy consumptions at perception layer in IoT implementation.

Energy Consumption Management and Optimization Hypothesis

Since equation 4, the mathematical model for energy consumption in perception layer of IoT autonomous applications (PLIoTAP) developed from Figure 2 is not efficient, an energy management function (EMF) or block is introduced in figure 2 as shown in figure 3.

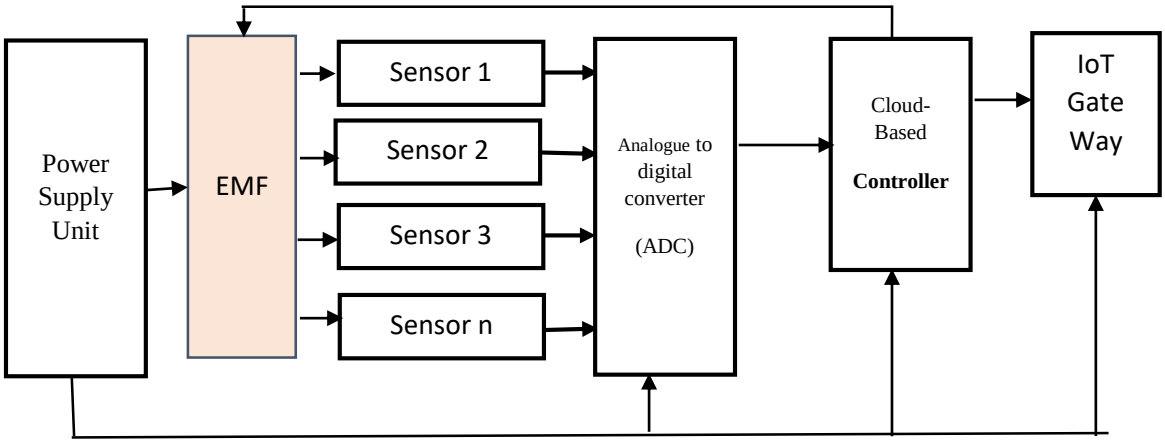

Figure 3: Block diagram of optimized and efficient energy management in PLIoTAP

Let the energy management function be lambda **λ**. **λ** is such that it has both input and output variables.

Input variables to **λ** are those set of definitions and declaration that classify all the components of perception layer (PL) as either: 1. High Priority, Mid Priority or Low Priority. The output variables are the state of each component of PL and on time duration of each state. The following hypothesis is proposed: The sensors to be adopted at the perception layer must be energy saving and IoT compliant.

1. High-Priority sensors are sensors that trigger time-critical events. Most times they send external interrupt to the cloud-based controllers.
2. Mid-Priority sensors are sensors that monitor the upper and lower thresholds of events in IoT applications. They can also serve as an interrupt to the cloud-based controller but do not necessarily need to be on 24/7.
3. Low Priority sensors are sensors that enable cloud-based controller collect data from the perception layer. These data are not needed for taking time-critical decisions. Rather they are stored at the cloud for further analysis on a later time.
4. The IoT gateway should be on only and only if there is need to send data to the cloud and should be switched off once data sending cycle is completed.
5. Cloud controller should be in power saving mode

From the above hypothesis, it implies that when **λ** acts on equation 3, it will break it into five distinct sections:

i. Power Consumption of the high-priority Sensors.
ii. Power consumption of the mid-priority sensors.
iii. Power consumption of the low-priority sensors.
iv. Power consumption of the cloud controller
v. Power consumption of the IoT gate way

Mathematically, it means that

$$\lambda\,(P_T) = P_h + P_m + P_l + P_{cc} + P_g \quad (5)$$

where

P_h =Power consumption of high priority sensors (hps)

P_m =Power consumption of the mid-priority sensors (mps)

P_L=Power consumption of the low-priority sensors (Lps)

P_{cc} =Power consumption of the cloud controller

P_g =Power Consumption of the gateway.

If the total number of high, mid and low priority sensors are known together with their respective ratings, equation 5 can be computed using equation 4.6

$$\lambda(P_T) = \sum_{h=1}^{h=hmax}(\mathrm{i} * \mathrm{v}) + \sum_{m=1}^{m=Mmax}(i * v) + \sum_{L=1}^{L=Lmax}(iv) + \mathrm{icc} * \mathrm{V} + i_g * V \quad (6)$$

h_{max} is the maximum number of High-priority Sensors.

M_{max} is the maximum number of Mid-priority sensors.

L_{max} is the maximum number of Low-Priority Sensors.

In order to keep equation 6 simple, the current consumption of the sensors has been generalized as i. In practical implementation however, the current consumption of each sensor should be gotten from the sensor's data sheet.

Similarly, the energy consumption after optimization will now be

$$\lambda\ (E_T) = \sum_{h=1}^{h=hmax}(i * v)\, t_{onh}\ \sum_{m=1}^{m=Mmax}(i * v)\, t_{onm} + \sum_{L=1}^{L=Lmax}(i * v) t_{onL} + \mathrm{icc}*\mathrm{V}*t_{oncc} + \mathrm{ig}*\mathrm{V}*t_{ong} \quad (7)$$

where

t_{onh} is the total time the hps were on, t_{onm} is the total time the mps were on, t_{on_L} is the total time the Lps were on

t_{oncc} is the total time the cloud controller was on, t_{ong} is the total time the gateway was on.,

Equation 7 is the proposed optimized equation for efficient energy management at perception layer during data acquisition in IoT applications.

System Simulation

In order to validate equations 4 and 7, embedded systems representing physical layer of IoT autonomous application were designed using proteus professional software as shown in figure 4. Five sensors namely motion sensor, gas sensor, distance sensor, temperature and humidity sensors are interfaced to a microcontroller, ATMEGA 2560 to investigate and validate equations 4 and 7. Virtual display is also attached to the controller so that data can be collected. As an ongoing PhD research, an IoT gate way is also attached to the controller for research on the security aspect of the work. Embedded c language, a hybrid of assembly, C and C++ languages, is used to write codes or algorithms that implement equations 4 and 7. Energy consumption of figure 4 when algorithm that implements equation 4 was compared with that of energy consumption as a result of equation 7.

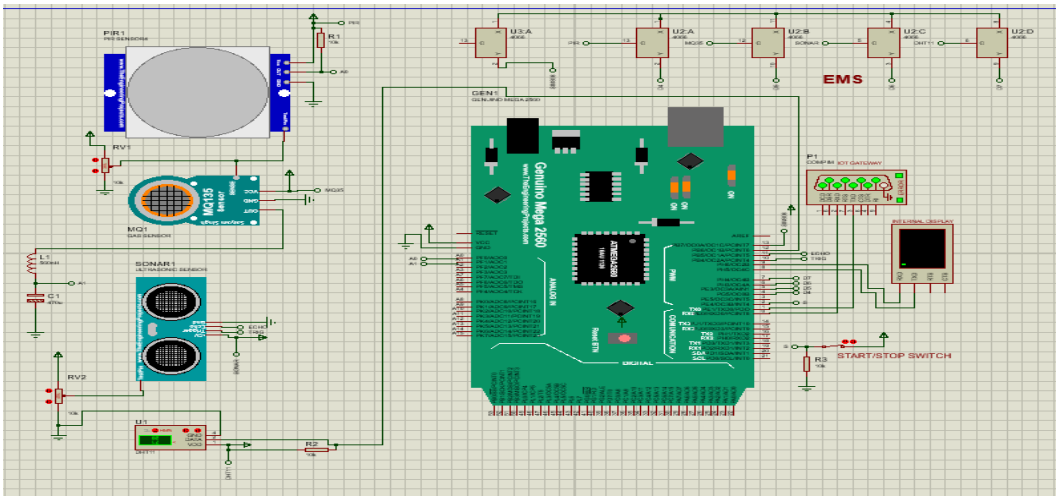

Figure 4: Complete schematic design for testing energy consumption models

Simulated Results

Figure 5 is a snap shot of sample simulation result. Tables 4.1 and 4.2 shows the comprehensive data collected when non-optimized and optimized algorithms were implemented respectively. Figures 6 and 7 shows the plots of cumulative energy consumption for non-optimized and optimized cases respectively

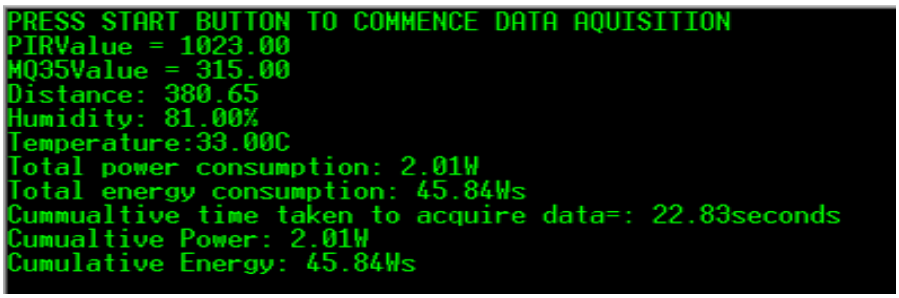

Figure 5: Simulation result

Table 1: Data received at the virtual terminal for non-optimized energy consumption

Sample No	Motion	gas level	Temperature level	Humidity level	Distance	Cumulative time	Cumulative power used	Cumulative energy Consumed
1	1023	315	33	81	380.65	0	2.01	45.84
2	1023	671	35	79	387.07	0	4.01	91.67
3	1023	648	35	79	387.07	0	6.02	137.51
4	1023	202	35	79	82.2	0	8.03	183.34
5	1023	21	41	75	82.2	22.83	2.01	45.84
6	2	22	41	75	82.2	45.66	4.01	91.67
7	2	18	41	75	82.2	68.5	6.02	137.51
8	2	19	41	75	82.3	91.33	8.03	183.34
9	2	22	41	75	82.18	114.16	10.04	229.18
10	2	22	41	75	82.3	136.99	12.04	275.01
11	2	22	41	75	82.2	159.82	14.05	320.85
12	2	20	41	75	82.2	182.66	16.06	366.68

13	1023	21	41	75	82.2	22.83	2.01	45.84
14	2	22	41	75	82.2	45.66	4.01	91.67
15	2	18	41	75	82.2	68.5	6.02	137.51
16	2	19	41	75	82.3	91.33	8.03	183.34
17	2	20	41	75	82.18	114.16	10.04	229.18
18	2	22	41	75	82.3	136.99	12.04	275.01
19	2	20	41	75	82.2	159.82	14.05	320.85
20	2	20	41	75	82.2	182.66	16.06	366.68
21	2	20	41	75	82.2	205.49	18.07	412.52
22	2	21	41	75	82.2	228.32	20.07	458.35
23	2	19	41	75	82.18	273.98	24.09	550.02
24	2	19	41	75	82.2	296.82	26.1	595.86
25	2	19	41	75	82.2	319.65	28.1	641.69
26	2	19	41	75	82.18	342.48	30.11	687.53
27	1023	565	38	82	509.25	91.33	8.03	183.34
28	1023	556	38	82	509.37	136.99	12.04	275.01

Table 2: Data received at the virtual terminal using optimized energy consumption model

Sample No	**motion**	**gas level**	**Temperature level**	**Humidity level**	**Distance**	**Cumulative time**	**Cumulative power available**	**Cumulative energy Consumed**
1	2	19	41	75	82.2	726	2.01	18.52
2	2	19	41	75	82.18	23515	4.01	37.41
3	2	21	41	75	82.28	46316	6.02	56.67
4	1023	454	39	78	501.76	69146	8.03	76.29
5	1023	441	39	78	501.76	91977	10.04	96.29
6	1023	445	39	78	501.76	114823	12.04	116.66
7	1023	406	36	82	501.76	137686	14.05	137.4
8	1023	414	36	82	501.76	160536	16.06	158.51
9	1023	434	36	82	501.76	183388	18.07	179.99
10	1023	434	36	82	501.76	206239	20.07	201.85
11	1023	408	36	82	501.76	229089	22.08	224.07
12	1023	452	36	82	501.76	251942	24.09	246.67
13	2	303	25	73	501.76	753	2.01	18.52
14	2	353	20	71	501.76	753	2.01	18.52
15	2	370	20	71	501.76	23576	4.01	37.42
16	2	369	20	71	501.76	46409	6.02	56.68
17	2	373	20	71	501.76	137731	14.05	137.44
18	2	367	20	71	501.76	183356	18.07	180.04
19	2	352	20	71	501.76	206196	20.07	201.89
20	2	355	20	71	501.76	251854	24.09	246.71
21	2	365	20	71	501.76	274705	26.1	269.67
22	2	348	20	71	501.76	297545	28.1	293.01
23	2	372	20	71	501.76	343150	32.12	340.79
24	2	389	20	71	501.76	365989	34.13	365.23
25	2	345	20	71	501.76	46335	6.02	56.68
26	2	361	20	71	501.76	69182	8.03	76.32
27	2	352	20	71	501.76	92019	10.04	96.32
28	2	344	20	71	501.76	114854	12.04	116.69

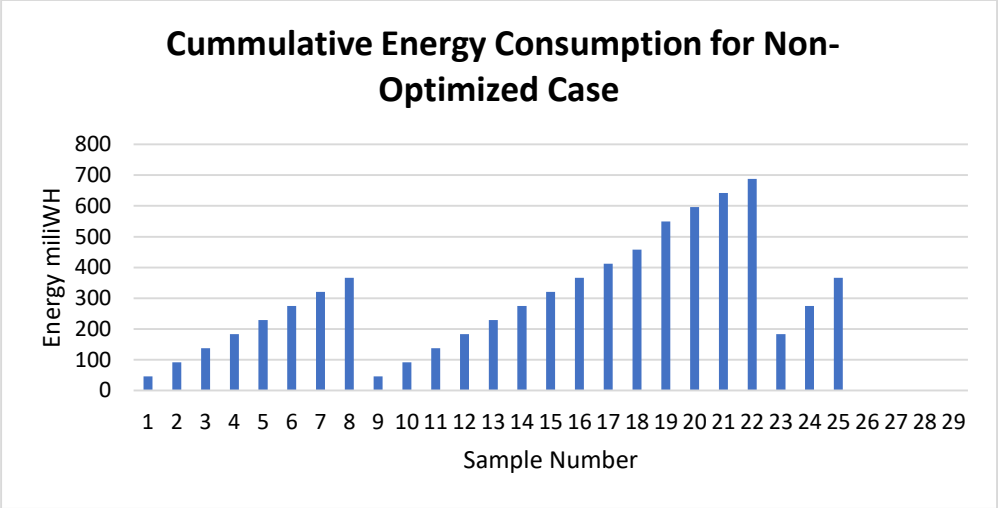

Figure 6: Cumulative energy consumption by the PLIoTAP system for non-optimized case

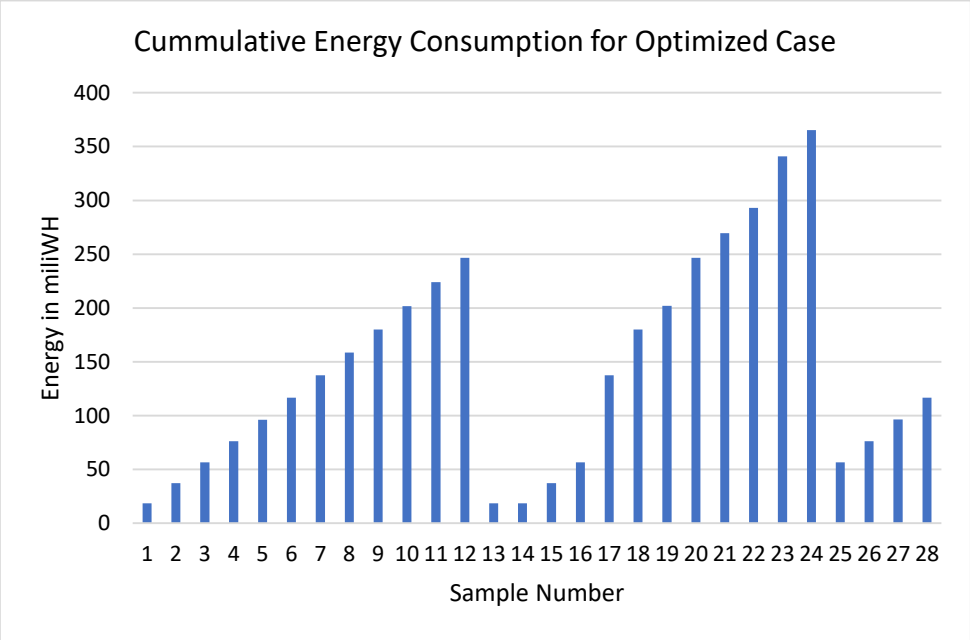

Figure 7: Cumulative energy consumption by the PLIoTAP system for optimized case

Discussions

The first thing that was noted after designing and simulating the PLIoTAP system is that the virtual terminal can only receive what is transmitted. As shown in figure 5 the first set of data transmitted when non-optimized energy consumption algorithm is loaded into the microcontroller are: motion Value (1023), gasValue (315), Distance (380.65), Humidity (81), Temperature (33), Total power consumption (2.01), Total energy consumption (45.84), Cumulative time taken to acquire data (22.83), cumulative power (2.01) and cumulative energy (45.84). It is observed from table 1 that nothing was received as cumulative time, so the virtual terminal returned zero as shown in table 1 and figure 6. Troubleshooting the codes revealed that the time field was not transmitted. The error was corrected, and 100% integrity was

achieved in data transmission as revealed when table 2 is compared with table 1 (sample no =1).

Now, the primary focus of this research is energy consumption optimization at physical layer for IoT autonomous applications. From table 4.1, the average energy consumption per data set transmitted (aec/dst) for non-optimized energy consumption (NOEC) is 45.83429 miliWH. For optimized energy consumption (OEC) as shown from table 2, aec/dst is 20.74091 miliWH. It means the approach proposed in this research improved energy saving by a factor of 2.20, and it represents 54.75% in improvement in energy consumption of physical layer in IoT autonomous applications. Figures 6 and 7 also confirm that there is significant improvement in the energy consumption of the system because the cumulative energy consumption for non-optimised case is 687.53miliWH while that of optimised case is 365.23 miliWH.

Conclusion

This work basically developed and validated mathematical equations for optimized energy consumption in autonomous applications. The result of this work can be applied in IoT systems. As an on-going PhD work, security is not considered in this mathematical model. Further works, shall investigate the suitability of the model developed in this work for cloud-based applications where security is a concern.

References

Al-Ali, A. R., Zualkernan, I., & Rashid, M. (2018). A survey of machine learning approaches for smart home energy management. IEEE Access, 6, 36241-36263.

Atzori, L., Iera, A., & Morabito, G. (2010). The internet of things: A survey. Computer networks, 54(15), 2787-2805.

Fortino, G., Guerrieri, A., Russo, W., & Savaglio, C. (2016). Towards context-aware energy management systems for smart homes and buildings. Information Systems Frontiers, 18, 99-119.

Gubbi, J., Buyya, R., Marusic, S., & Palaniswami, M. (2013). Internet of Things (IoT): A vision, architectural elements, and future directions. Future generation computer systems, 29(7), 1645-1660.

Hafeez, G., Zhao, L., & Markopoulos, P. (2021). Cross-layer energy efficiency optimizations in green internet of things. IEEE Internet of Things Journal, 8(6), 4713-4724.

Kausar, A. R., & Reza, A. W. (2017). A review on internet of things (IoT), security and privacy issues. In 2017 2nd International Conference on Anti-Cyber Crimes (ICACC) (pp. 45-49). IEEE.

Khan, L. U., Yaqoob, I., Tran, D. H., Kazmi, S. A., & Hong, C. S. (2020). Edge-computing-enabled smart homes: A privacy-preserving energy management system based on blockchain and machine learning. IEEE Internet of Things Journal, 7(7), 5825-5838.

Lee, K., & Kim, H. (2018). Sensor-based EEMS for smart grids: A review. IEEE Transactions on Industrial Informatics, 14(2), 567-578.

Li, H., Ota, K., & Dong, M. (2018). Learning IoT in edge: Deep learning for the internet of things with edge computing. IEEE Network, 32(1), 96-101.

Mahmood, A., Khan, S. U., & Raza, B. (2019). A survey on energy management and optimization in IoT based smart homes. Renewable and Sustainable Energy Reviews, 114, 109334.

Mahmood, A., Khan, S. U., & Raza, B. (2019). A survey on energy management and optimization in IoT-based smart homes. Renewable and Sustainable Energy Reviews, 114, 109334.

Mohammadi, M., Al-Fuqaha, A., Sorour, S., & Guizani, M. (2018). Deep learning for IoT big data and streaming analytics: A survey. IEEE Communications Surveys & Tutorials, 20(4), 2923-2960.

Perera, C., Zaslavsky, A., Christen, P., & Georgakopoulos, D. (2014). Context aware computing for the internet of things: A survey. IEEE Communications Surveys & Tutorials, 16(1), 414-454.

Sarker, I. H., Abushark, Y. B., Colman, A., Han, J., & Khan, A. I. (2021). Edge computing: A review. Future Generation Computer Systems, 115, 138-153.

Shafique, K., Khawaja, B. A., Sabir, F., Qazi, S., & Mustaqim, M. (2020). Internet of things (IoT) for next-generation smart systems: A review of current challenges, future trends and prospects for emerging 5G-IoT scenarios. IEEE Access, 8, 23022-23040.

Shiverware. IoT Board. Available from: https://shiverware.com/img/iot/iot-board_f10eaf4652fec8ee.jpg.

Smith, J. (2020). IoT-based energy management for residential buildings. Journal of Smart Homes and Cities, 2(3), 123-140.