Ocimum Gratissimum essential oil: A review of extraction methods, phytochemical constituents, pharmacological uses and formulation approaches

Ikeotuonye CB[1], Uronnachi EM*[1], Nwakile CD[1], Attama AA[2]

[1]Department of Pharmaceutics and Pharmaceutical Technology, Faculty of Pharmaceutical Sciences, Nnamdi Azikiwe University, Awka, Anambra State, Nigeria.

[2]Department of Pharmaceutics, University of Nigeria, Nsukka, Enugu State, Nigeria.

Submitted: 6th Oct., 2023; Accepted: 23rd Oct., 2023; Published online: 31st Oct., 2023
DOI: https://doi.org/10.54117/jcbr.v3i5.1
**Corresponding Author: Uronnachi EM;* em.uronnachi@unizik.edu.ng

Abstract

Ocimum gratissimum is a plant native to Africa. Its leaves have been used in local dishes over the years, with documented evidence of varying pharmacological uses of its essential oil. This review focuses on the extraction methods, phytochemical constituents, pharmacological uses and formulation approaches of *Ocimum gratissimum* essential oil. The traditional extraction methods that have been widely used include the solvent, cold press and hydrodistillation methods. However, newer methods such as steam distillation, ultrasound and microwave assisted hydrodistillation, supercritical fluid extraction, pressurized liquid extraction and pressurized hot water extraction methods have not been fully reported. These methods provide more yield of the essential oil compared with the traditional methods and their processes are less laborious. Furthermore, they are often limited to analytical applications as they cannot handle large quantities of samples. The phytochemical constituents of *Ocimum gratissimum* essential oil vary, based on location of the plant and the time of the season the plant parts were harvested for extraction. The African species have more thymol than eugenol. Other notable constituents are saponins, terpenes and flavonoids in both African species and others. The essential oil of *Ocimum gratissimum* bears the scent of the plant and other important properties such as protection of the plant from pests and to attract insects for cross-pollination. The essential oil of this plant has been noted to possess various pharmacological properties which explains its use in inflammatory conditions and the treatment of diarrhoeal disease, wound healing and cerebrovascular disorder, amongst others. The essential oil of *Ocimum gratissimum* has been embedded in gels, cream, silver nanoparticles and

nanoemulsion to improve its pharmacological activity and bioavailability. This review article highlights the potentials of the essential oil of this ubiquitous plant as a therapeutic source for the treatment of different tropical diseases.

Keywords: Ocimum gratissimum; essential oil; extraction; Pharmacologic uses; Phytochemicals.

Introduction

Essential oils are naturally occurring compounds that have been exploited for their unique medicinal properties (Lesgard et al., 2014). They are complex and multifunctional compounds present in plants and used by plants for various roles including defence against herbivores, insects and microorganisms, and can be used in signalling communication between plants (Lesgard et al., 2014). Each plant species has its own specific mix of essential oils (Blowman et al., 2018). Essential oils have been documented to bear the scent or flavour of its parent plant (West et al., 2023). The aromatic components of the compounds contained in the oil are responsible for the scent it bears (West et al., 2023).

Ocimum gratissimum is called 'Nchanwu' in Igbo language and widely available in our locality, used in preparing many local dishes in South-eastern Nigeria. It is native to Africa, Madagascar, Southern Asia, Mexico, Panama, Brazil etc (Orwa et al., 2009). There is the eugenol and the thymol subtypes. The Eugenol subtype being more prevalent in India and while the thymol subtype is prevalent in Africa and parts of South America (De Castro et al., 2019). The various species of *Ocimum gratissimum* usually produce essential oil but are mainly used as vegetables for food in local delicacies. It starts flowering at the about the 5th month while seeds generally mature at about the 7th month. Flowering is usually all year round for South-eastern species (Rojas-Sandoval et al., 2018). Oil content of the plants depends on the age of the plant, with oil content rising with increasing age (Orwa et al., 2009).

The essential oil of *Ocimum gratissimum* has varying phytochemical constituents depending on geographical location from where the leaves were sourced and the time of the season. As the components vary in location, the medicinal uses also vary with locations since the medicinal properties are dependent on its phytochemical constituents (Sharma et al., 2022). This review article discussed the extraction methods, phytochemical constituents, pharmacological uses and formulation approaches for the essential oil of this ubiquitous plant.

Methods of extraction of essential oils

Extraction methods of the *Ocimum gratissimum* essential oil have evolved overtime from simplified methods such as solvent method, cold press method and Clevenger method, a type of hydro-distillation method, to the more sophisticated methods such as steam distillation, ultrasound assisted and microwave extraction methods, with advancement in technology. These methods will now be described in details.

Solvent method

Solvent extraction is a commonly used method of separation of essential oils based on the solubility of its constituents. It is done using immiscible liquids and reserved for delicate plants like *Ocimum gratissimum* to encourage production of higher amounts of essential oils at lower cost (Wildwood et al., 2018). Some of the disadvantages of this method include an extended extraction time, high solvent usage and difficulty in reproducibility (Wildwood et al., 2018). Typically, a soxhlet apparatus is used. The solvents used are methanol, ethanol or water. The leaves of *Ocimum gratissimum* are crushed in the above apparatus. The solvents are then added and extraction done for about 6 hours at 40, 50 and 60˚C for the ethanol and methanol extracts respectively. The water extraction is usually done at 90, 100 and 110 ˚C (Onyebuchi et al., 2020). An evaporator is used to collect the crude extract which is then dried by refrigeration and stored at a temperature of 4 ˚C (Onyebuchi et al., 2020, Amengialue et al., 2013).

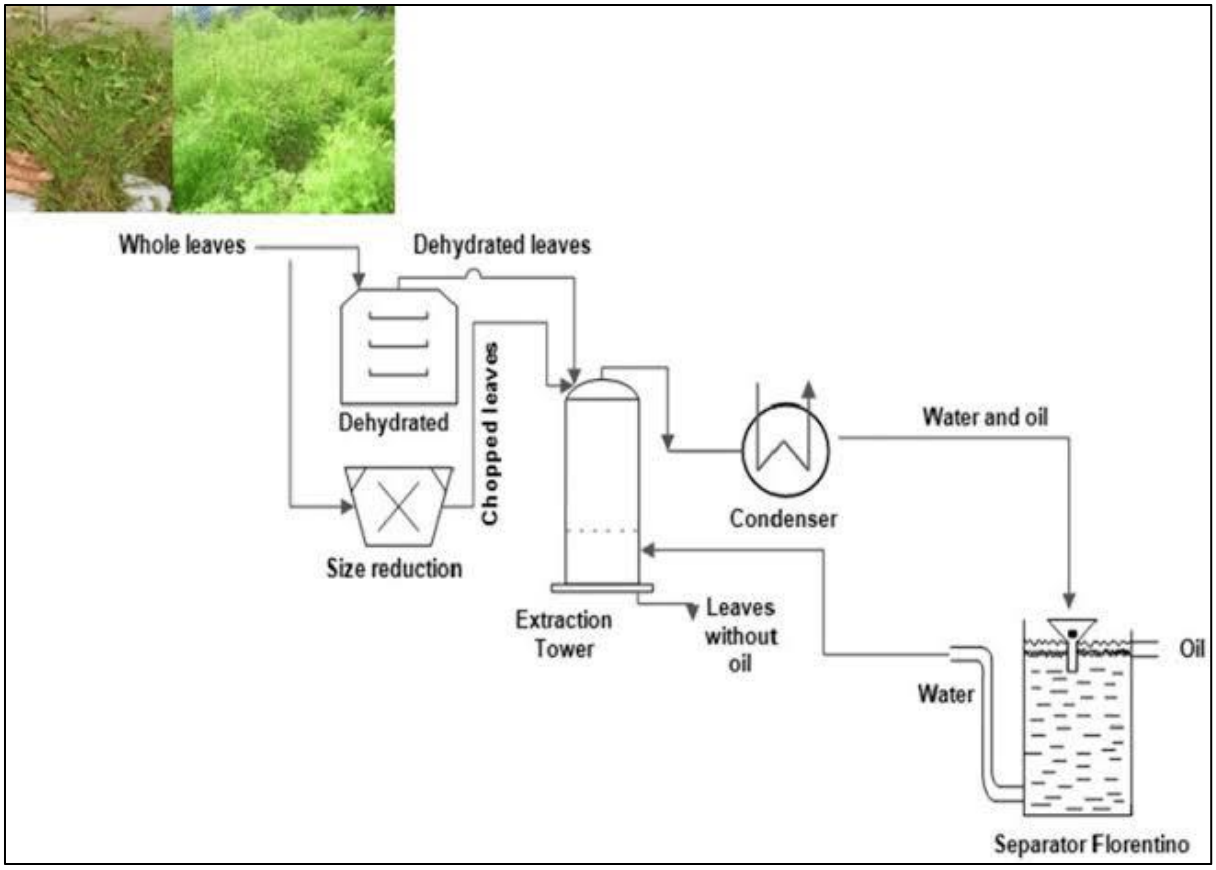

Figure 1: The solvent method of extraction flow chart (Quezada-Moreno et al., 2019)

Cold pressing method

Cold pressing is a mechanical method of extracting essential oil from different parts of the plant. It is one of the best methods for essential oil extraction as the resulting oil is usually 100 % pure (Khaskar et al., 2019). In this method, the plant materials are put in a specially designed container having spike-like components at the bottom which puncture the leaves and apply pressure as well to release the oils. The contents are then spinned and centrifuged to separate the oil from the pulp created from the plant material (Dawidowivz et al., 2018). Previously, the pressing was done by hand while a sponge was used to soak up the essential oil (Arnould-Taylor et., 1981). The sponges were then placed in a mechanical apparatus like a vice to press out the oil from the sponge into a container. The principle of this method is that the spinning and centrifugation punctures the sacs containing the oils. Advantages of cold pressing method include preservation of the pure form of the oil as heat is not required which can potentially damage the essential oil. It is not a preferred method of extraction of *Ocimum gratissimum*.

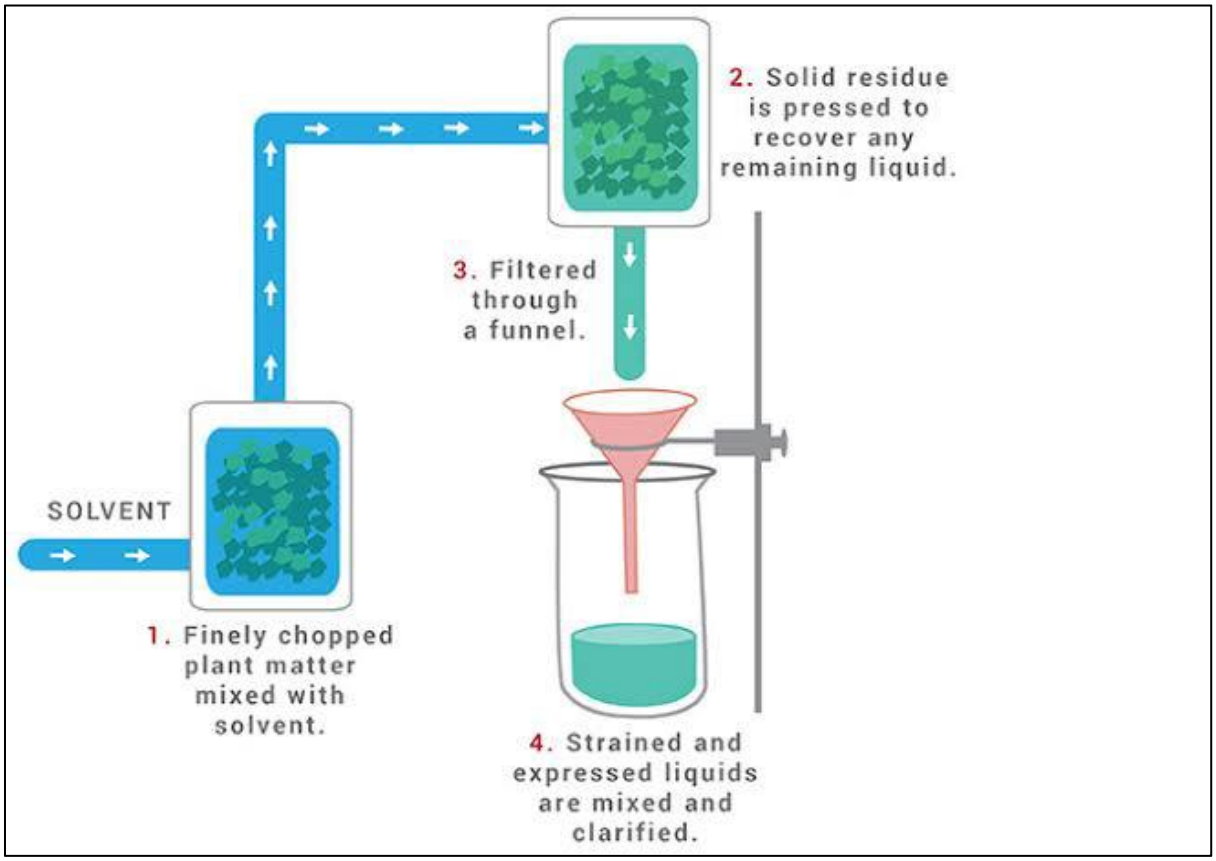

Figure 2: Processes involved in the cold press extraction method (New directions aromatics, 2023)

Hydro-distillation method

Hydro-distillation is a frequently used method for extraction of essential oils. The essential oils are obtained by heating a mixture of water or other solvents and the leaves in the case of *Ocimum gratissimum*. The vapour is then liquefied in a condenser. A condenser and a decanter are required to recover the essential oils from water. (Meyer-Warnod et al., 1984).

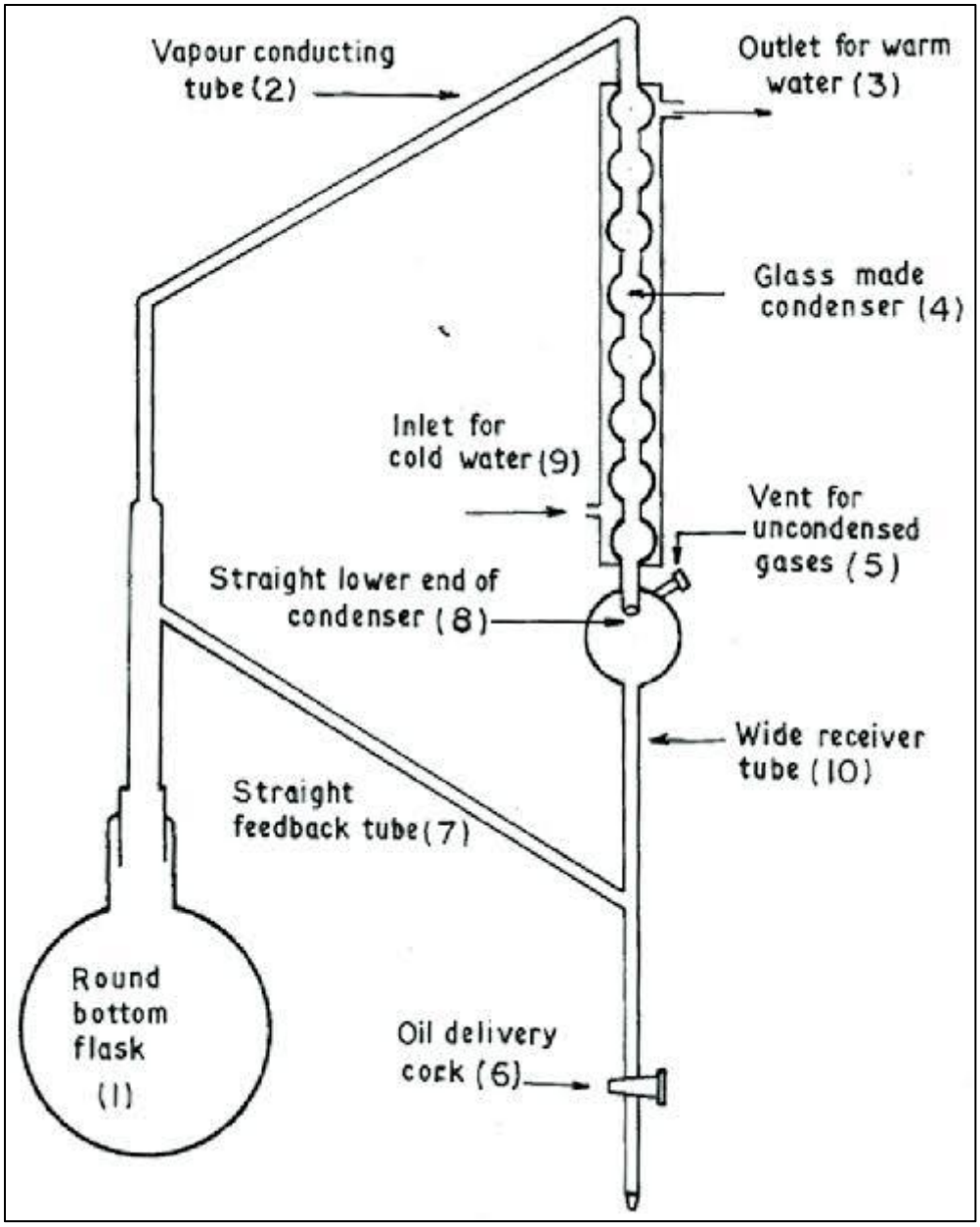

Figure 3: Hydrodistillation process (Guha et al., 2019)

Steam distillation method

This is employed for plant products that are sensitive to temperature and are aromatic in nature such as *Ocimum gratissimum*. The plant materials are pushed into a container and are steamed without breaking them into pieces in water. The steam is allowed to pass through the leaves from the bottom to the top. The vapour is then liquefied allowing for collection of the essential oil. This method allows vapour pressure to equilibrate ambient pressure at about 100 °C. This ensures that vaporization will occur at temperatures close to that of water (Rai et

al., 2014). Nguyen et al., (2020), Maharaj et al., (2020) and Faria et al., (2006) all employed this method in the extraction of essential oils.

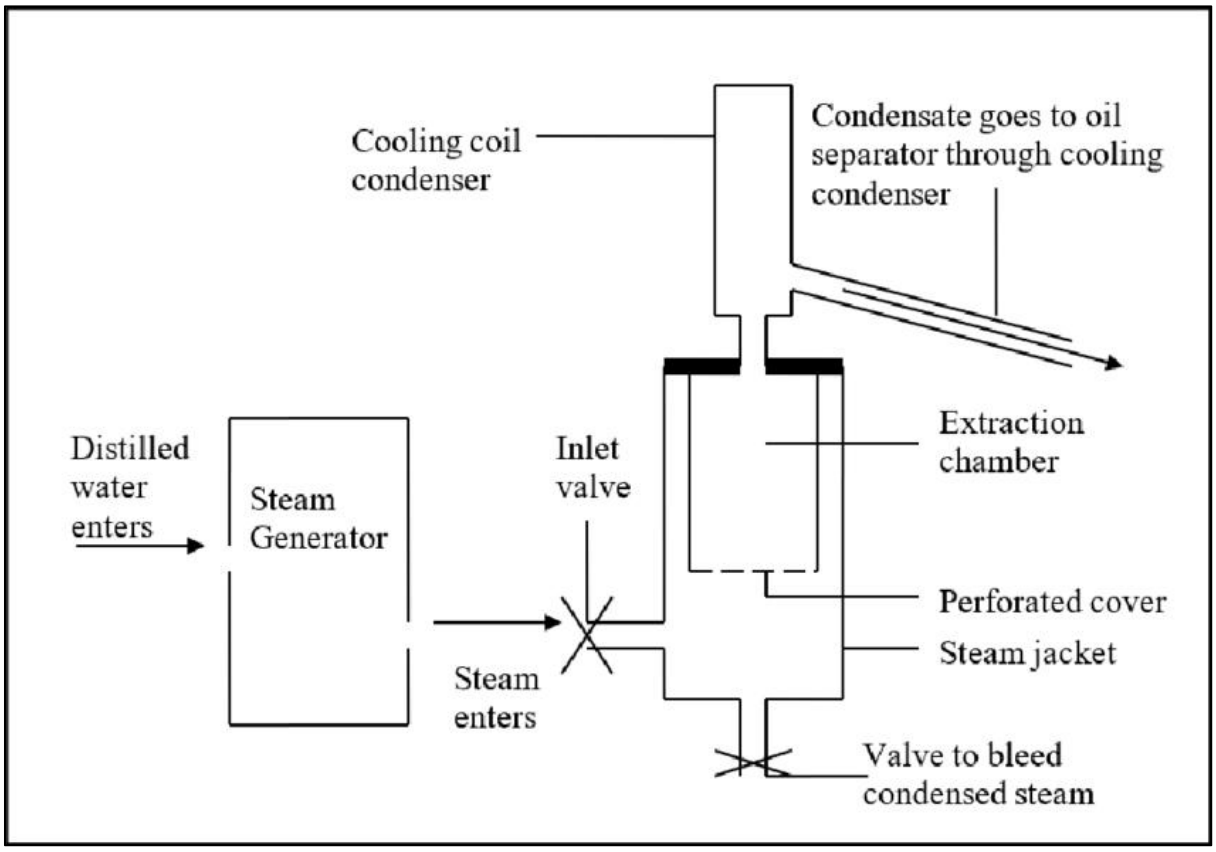

Figure 4: Steam distillation method (Maharaj et al., 2020)

Ultrasound assisted method

This is a new method of essential oil extraction which prevents the damage to heat labile compounds as it uses sonication, a non-heat thermal method of extraction (Kumar et al., 2021). It uses the mechanical waves of ultrasound which are more than the frequency range of human ear, usually greater than 20 kHz (Kumar et al., 2021). This energy generated together with some solvents are then used to target the desired substances from the plants. The ultrasound can be delivered using a probe or a bath (Wildwood et al., 2018). The advantages of this method include: rapid extraction process, protection of heat sensitive compounds. It is however expensive and not readily available. This method was employed by Anusmitha et al., (2022), Aloisio et al., (2023) and Sneha et al., (2013) for the extraction of the essential oil of *Ocimum gratissimum*. The yield of essential oils from *Ocimum gratissimum* leaves were noted to be higher in all the above studies using the ultrasound

assisted method compared to the unassisted hydrodistillation method. Sample volumes of 5ml to 1 L can be handled by this method (Moorthy et al., 2015).

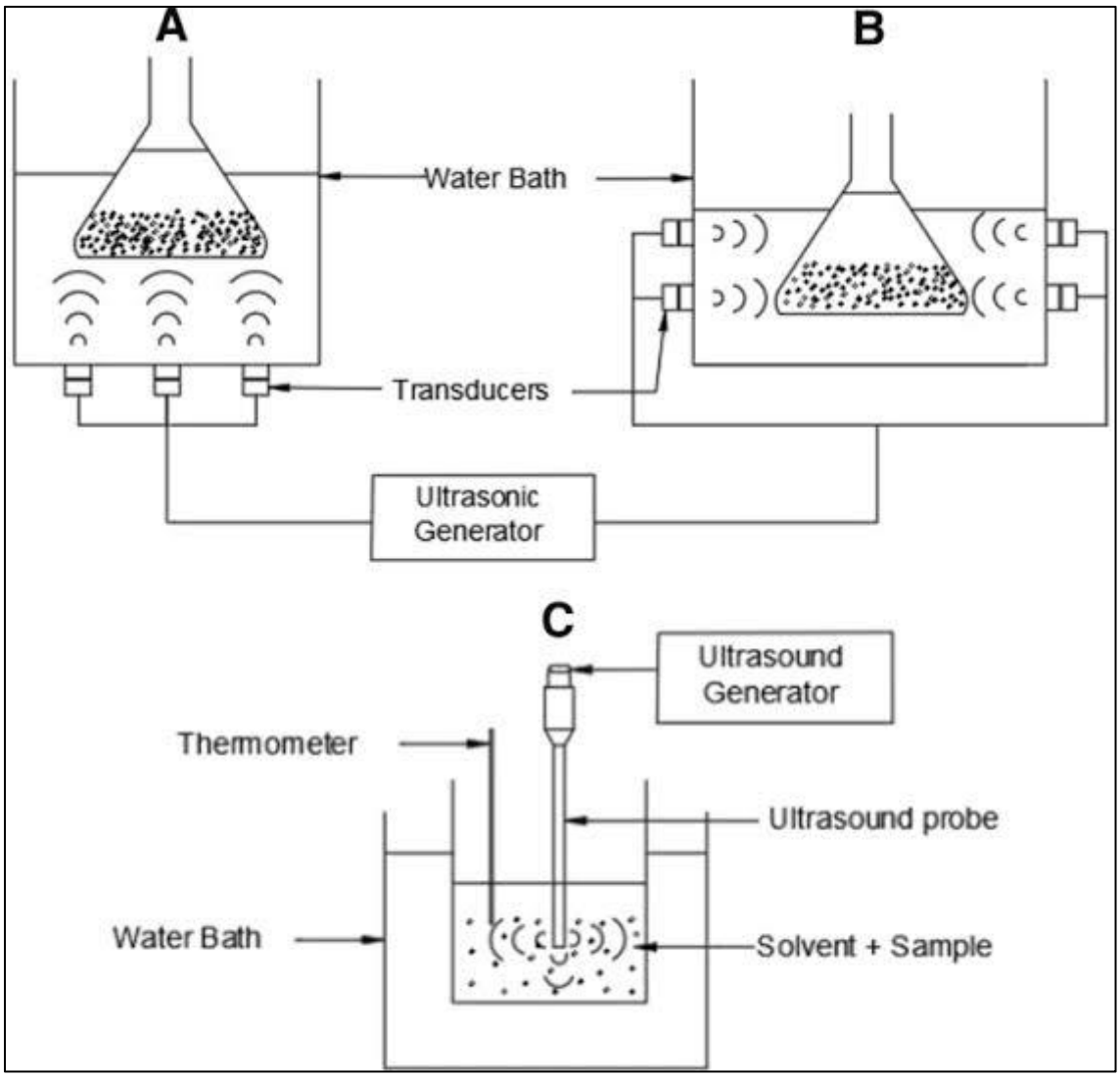

Figure 5: Ultrasound assisted hydro-distillation method (Thilakarathna et al., 2022)

Microwave assisted method

In this method, the microwave energy is used to heat solvents with a plant material so as to partition the target substance from the plant source into the solvent. The advantage of this method is that the sample-solvent mixture is rapidly heated to produce the target substance or oil. Other advantages include reduced CO_2 emission, energy consumption and costs (Moradi et al., 2018). The pre-treatment with microwave energy accelerates the conventional hydro-distillation, steam distillation methods or the solvent approach (Moradi et al., 2018). This

method was employed by Alara et al., (2020) and Shelar et al., (2016) and they noted an improvement in the yield of the essential oils of *Ocimum gratissimum*.

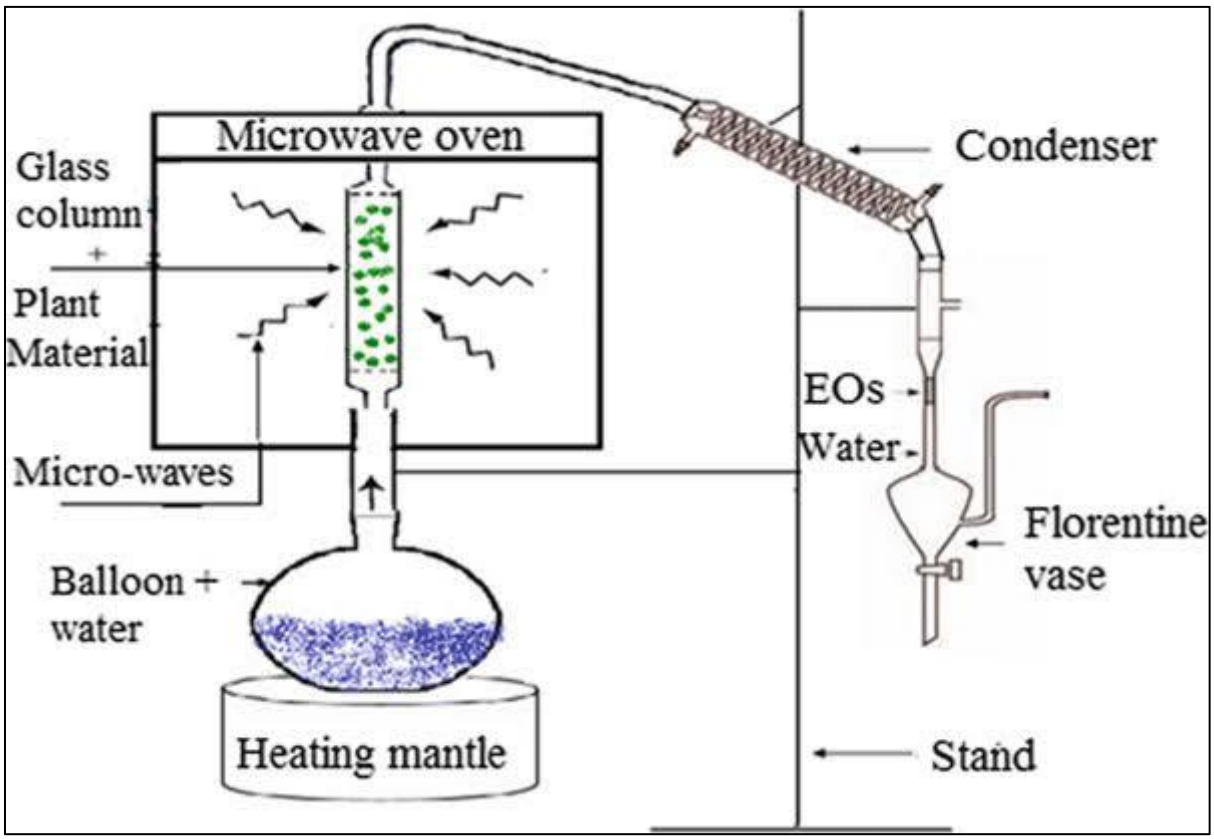

Figure 6: Microwave assisted method of extraction of essential oils (Moradi et al., 2018)

Phytochemical constituents of *Ocimum gratissimum*

The phytochemical constituents of *Ocimum gratissimum* vary from country to country and season to season. Joshi (2021) described differences in the constituents of *Ocimum gratisssimum* obtained during summer and winter. The constituents that are central in the essential oil of *Ocimum gratissimum*, irrespective of season or country of origin include tannins, flavonoids and saponins. Other constituents vary according to the country of location and the season of harvest of the leaves for essential oil extraction. Being a plant ubiquitous in the tropics, the literature search revealed results from mainly India and Nigeria. Plant extracts from the Indian subcontinent also contain large quantities of eugenol unlike extracts from Africa (Gilles et al., 2023). Eugenol is an often colourless and sometimes yellow oily substance extracted from essential oil of some plants like *Ocimum gratissimum,* clove and nutmeg. It is aromatic with a spicy scent. It has been used as antiseptics

and in fragrance, insecticides, seasonings and flavourings. Tannins are substances which shrinks body tissues and easily bind fast to other materials. They contain amino acids and alkaloids and are generally thought to interfere with absorption of nutrients in the body (Bate-Smith et al., 1962). Flavonoids on the other hand are substances which abound in human diet. Flavonoids do not have a direct antioxidant effect (Cornell, 2014). Rather, after their consumption, they are converted to uric acid by depolymerisation (Bhavani et al., 2019). This brings about its antioxidant effect as noted in the essential oil of *Ocimum* gratissimum (Cornell, 2014). Flavonoids have also been noted to have unproven anti-cancer effect as well as lower blood pressure and cardiovascular risk in studies. Flavonoids in *Ocimum gratissimum* include nepetrin, quercetin and rutin (Cornell, 2014). Other substances that have been extracted from the essential oil *of Ocimum gratissimum* include thymol, gratissimol and terpene (Bhavani et al, 2019); others include sinapic acid, rosmarinic acid, luteolin, hymenoxin and oleanolic acid while using methanol as the extracting substance (Venuprasad et al., 2014). Usunobun et al., (2016) found varying quantities of sodium, manganese, calcium, potassium, copper, zinc and iron in addition to the usual tannins, flavonoids, alkaloids and saponins. Idigo et al., (2022) also found epihedrine, spartein, lectin, reservatol and proanthocyanin. From the foregoing, it can be deduced that the phytochemical constitution of the *Ocimum gratissimum* may be dependent on the method of extraction used and the locality from which the leaves were sourced.

Pharmacological uses of the essential oil of *Ocimum gratissimum*

The essential oil of *Ocimum gratissimum* has a wide range of pharmacological activity and has been touted as a potential new drug due to its immense qualities. From available literature, the essential oil of *Ocimum gratissimum* has antioxidant, anti-inflammatory, anxiolytic, neuroprotective, immunomodulatory, anti-microbial, wound healing, analgesic and cytotoxic properties. These pharmacological activities put *Ocimum gratissimum* out as a potential new drug that may offer alternatives for diseases such as bacterial infection, diarrhoea, diabetes, musculoskeletal pain, helminthiasis and cancer (especially with its antioxidant and immunomodulatory capacity). These activities will be described in details below.

Antioxidant effect

The antioxidant effect of *Ocimum gratissimum* is proven. *In vivo* studies on rats and mice showed significant inhibition of peroxidase activity and ferrous sulphate when compared with a known antioxidant

like vitamin C (Njoku et al, 2011). It may help to reduce the effects of oxidative stress in the body.

Anti-microbial activity

Anti-microbial property of *Ocimum gratissimum* essential oil against *Staphylococcus aureus*, *Escherichia coli* and *Salmonella typhi* has been demonstrated (Adebolu et al., 2005). These organisms have been implicated in diarrhoeal and gastrointestinal diseases. The minimum inhibitory concentration (MIC) of *Ocimum gratissimum* ranges from 0.001 to 0.1% (v/v) (Adebolu et al., 2005).

Anti-inflammatory/analgesic activity

Anti-inflammatory/analgesic property of *O. gratissimum* essential oil has also been demonstrated hitherto (Sahouo et al, 2003). This effect is mediated through its activity on cyclooxygenase and lipoxygenase enzymes in the prostaglandin H_2 system at IC_{50} values of 125 µg/ml and 144 µg/ml for both enzymes (Sahouo et al, 2003). This property of *O. gratissimum* may be useful in treating musculoskeletal pain and other inflammatory conditions.

Neuroprotective activity

The essential oil of O. *gratissimum* have also shown promise in disease conditions that cause cerebral ischemia as seen in some types of stroke. The neuroprotective effect was thought to be executed through its antioxidant effect on oxidative stress. When the middle cerebral artery of Wistar rats were occluded to produce cerebral ischemia, with pre-treatment using the *Ocimum gratissimum* essential oil (150 mg/kg or 300 mg/kg), there was significant attenuation of the oxidative stress and neurologic deficits produced by the occlusion of the middle cerebral artery, showing a possible neuroprotective characteristic (Bora et al, (2011); Imosemi et al, (2017).

Immunomodulatory activity

Some studies have demonstrated the immunomodulatory effect of *O. gratissimum*. A study by Akachukwu et al, (2011) showed an increase in the haematocrit level when albino rats were fed with the essential oil of *Ocimum gratissimum*. The study also noted an increase in the antibody titre of the rats suggesting that its immunomodulatory activity is mediated through stimulation of antibodies. Okojie et al, (2016) noted also an increase in packed cell volume, platelet count, interleukin-2 and CD_4 counts which were dose dependent. Other studies that corroborated this are Chien-Cheung et al., (2014); Ugbogu et al., (2021) and Valdivieso et al., (2019).

Cytotoxicity

The extracts of the leaves of *Ocimum gratissimum* have demonstrated anticancer activity across several cancer cell lines. *In vivo* activity has also been reported suggesting that the leaf extracts can become potential anticancer agents. Chen and co-workers showed that the aqueous extract of *Ocimum gratissimum* was able to induce cellular apoptosis and antiangiogenic effects in lung cancer cell lines (adenocarcinoma) (Chen et al., 2011). Absence of apoptosis and angiogenesis are essential steps in cancer prognosis. A review by Ohiagu et al., (2021) showed that the caffeic acid and Oleanolic acid in *Ocimum gratissimum* possessed anticancer activity against breast, cervical, pancreatic, colon, bone and prostate carcinomas. They noted that other anticancer substances in the extracts of *Ocimum gratissimum* include saponins, thymol, alkaloids, citral, geraniol and eugenol.

Wound healing

Ibezim et al., (2018) demonstrated that the ointment of *Ocimum gratissimum* showed superior wound healing effect when compared with cicatrin powder. Orafidiya et al., (2003) also showed from their studies that the topical application of *Ocimum gratisimum* promoted better wound healing than cicatrin powder used as control and Cetavlex® cream when applied on rabbit wounds for 15 days. *Ocimum gratissimum* ointment even demonstrated further healing properties where Cetavlex® cream did not, after a three-day wash out period. The above were corroborated by studies conducted by Osuagwu et al., (2004) and Umeh et al., (2022)

Previously employed formulation approaches for *Ocimum gratissimum*

Formulations of substances have been made to protect the bioactive contents of the substance, make the substance more stable under physical conditions and in some cases, to enhance its bioactivity. The extracts of *Ocimum gratissimum* have been embedded in nanoemulsions, nanoparticles, gels and creams.

Nanoemulsions

A nanoemulsion is a colloid, consisting of the dispersion of two liquids that do not mix, with one acting as the dispersed phase while the other liquid acts as the dispersion medium. The components of nanoemulsion include oil, surfactants, water and water-soluble co-solvents. Some of the surfactants that have been used include tween (polyoxyetylene derivatives), cremophor (poly oxyl-35 castor oil), polysaccharides and phospholipids (Quian et al., 2011). Nanoemulsions enhance the ability of several drugs because of their characteristics which include high solubilization, transparency or translucence, small droplet

size, low viscosity, large surface area, kinetic stability and the ability to protect encapsulated active substances (Kumar, et al, 2021). Formulation of nanoemulsions can be achieved using either a high energy method like ultrasonication, high pressure homogenization and microfluidization. Low energy method involves phase inversion emulsification and self-nanoemulsification. Low energy methods are preferred to high energy methods as they need less equipment and have better cost-benefit profile due to the low energy it requires. Nanoemulsions are usually reserved for hydrophobic drugs which have solubility and bioavailability issues as described by Chuo et al., (2023), Karthik et al., (2023), Quian et al., (2011). Nanoemulsions of *Ocimum gratissimum* have been used to improve the antimicrobial activity of the essential oil of *Ocimum gratissimum* and has been demonstrated in studies by Mahajan et al., (2021); Araujo-Silva et al., (2016); Ontao et al., (2021); and Okonkwo et al., (2020).

Silver Nanoparticles and gel

Extracts of *Ocimum gratissimum* have been embedded in silver nanoparticles. Silver nanoparticles have distinctive features such as being highly mobile, having specific surface area and having smaller sizes than their parent compounds (King et al., 2023). These properties have become advantageous in their application to medicine such as drug carriers, anti-cancer therapy, medical diagnosis and imaging. As nanoparticles can circulate freely in the blood and targeted at specific tissues, it has also been found useful in the treatment of neurological conditions such as Parkinson disease, Alzheimer disease and multiple sclerosis. Prabu et al, (2017) described the use of gel incorporated with silver nanoparticle of *Ocimum gratissimum* in the treatment of acne vulgaris. Mfon et al., (2020) described the embedding of zinc oxide nanoparticle of *Ocimum gratissimum* leaf extract.

Creams

Keziah et al., (2015) produced a cream of *O. gratissimum* as mosquito repellants using the method described by Adeniran and Fabiyi (2012). The creams produced showed comparable repellent activity to conventional repellents. Ilomuanya et al., (2018) formulated and evaluated a poly herbal anti-oxidant facial cream, containing ethanol extracts of *Psidium guajava* and *Ocimum gratissimum*, which showed effective antioxidant property.

Conclusion

Ocimum gratissimum essential oil has shown huge promise as a therapeutic agent in the treatment of different ailments in the tropics. Being a ubiquitous plant with varying inexpensive and available methods for its extraction, improvement of its

pharmacological activities can be achieved using encapsulation by nanoemulsion and other formulation approaches to ensure its efficacy, improve its solubility and bioavailability.

References

Adebolu TT, Oladimeji SA (2005): Antimicrobial activity of leaf extract of ocimum gratissimum on selected diarrhoea causing bacteria in southwestern Nigeria. Afr J Biotech. 4, 682-84.

Adeniran O, Fabiyi E (2012). A cream formulation of an effective mosquito repellent: a topical product from lemon grass (cymbopogon citratus). J Nat Prodt Plant Resource. 2, 322-27.

Alara OR (2020). Optimization of microwave-assisted extraction of phenolic compounds from ocimum gratissimum leaves and its LC-ESI/MS profiling, antioxidant and antimicrobial activities. 14, 3590-604.

Aloisio C, Razola-Diaz MDC, Aznar-Ramos MJ, Longhi MR, Andreatta AE Verardo V (2023): Optimization of the extraction conditions of bioactive compounds from ocimum basilicum leaves using ultrasound-assisted extraction. 28, 5286

Akachukwu C. Immunomodulatory activity of the methanolic extract of ocimum gratissimum in Wistar albino rats. Available at mouau.afribary.org/work/view/immunomodulstory-activity-of-methanolic-extract-of-ocimum-gratissimum-in-wistar-albino rats-7-2. Accessed 19th July, 2023.

Amengialue O, Edobor O, Egharevba AP (2013): Antibacterial activity of extracts of Ocimum gratissimum on bacteria associated with diarrhoea. BAJOPAS. 6, 143-45.

Anusmitha KM, Aruna M, Job JT, Narayanankutty A, Benil PB, Rajagopal R et al (2022): Phytochemical analysis, antioxidant, anti-inflammatory, anti-genotoxic and anticancer activities of different Ocimum plant extracts prepared by ultrasound-assisted method. Phy Mol Plant Path. 117, doi.org/10.1016/j.pmpp.2021.101746

Araujo-Silva V, Da Sousa JP, De Luna FP, DeFreitas AFR, Coutinho HDM, Alves LBN (2016): Ocimum basilicum: Anti-bacterial activity and association study with antibiotics against bacterial of clinical importance. Pharm Biol. 54, 863-867.

Arnould-Taylor, WE (1981). Essential oils, In: Arnould-Taylor editor. Aromatherapy for the whole person. Stanley Thornes, United Kingdom, p: 22-26.

Bate-Smith S (1962). Flavinoid compounds. In: Florkin M, Mason HS editors. Comparative biochemistry. Academic press, New York, p.75-809.

Bhavani T, Mohan R, Mounica C, Nyamisha J, Krishna AG, Prabhavathi P et

al (2019): Phytochemical screening and anti-microbial activity of ocimum gratissimum review. J Pharm and Phyto. 8, 76-79.

Blowman K, Magalhaes M, Lemos MFI, Pires IM (2018): Anticancer properties of essential oils. *Evid based Complement Alternat Med* . 2018, 1-12

Bora KS, Monga J (2011): Cerebroprotective effect of ocimum gratissimum against focal ischemia and reperfusion-induced cerebral injury. Pharm Biol. 49, 175-81.

Chen H, Lee M, Kuo C, Tsai P, Liu J, Kao S (2011). Ocimum gratissimum aqueous extract induces apoptotic signalling in lung carcinoma cell A549. Evidence-based Compl Alt Med. 2011, doi.org/10.1155/2011/739093.

Chien-Chung Lin, Pei-Yu C, Chia-Yao S (2014): Novel target genes responsive to apoptotic activity by Ocimum gratissimum in human osteosarcoma cells. Am J Chinese Med. 42, 743-67.

Chuo SC, Setapar SHM. Application of nanoemulsion in comestics. Available at sciencedirect.com/article/abs/pii/B98012822 9675000. Micro & Nano Tech. Assessed on 19th July, 2023

Cornell college of Animal science. Saponins. Available @ Poisonousplants.ansci.cornell.edu/toxicagen ts. Accessed 16th July, 2023.

Dawidowicz AL, Rado E, Wianowska D, Mardarowicz M, Gawdzik J (2018): Application of PLE for the determination of essential oil component of Thymus vulgaris. Talanta. 76, 878-84.

De Castro JAM, Monteiro OS, Coutinho DF, Rodrigues AAC, Da Silva JKR, Maia JGS (2019): Seasonal and circadian study of a thymol/γ-Terpinene/p-cymene type oil of Ocimum gratissimum L and its antioxidant and antifungal effects. J Braz. Chem Soc. 30, 930-939.

Faria TJ, Ferreira RS, Yassumoto L, De Souza JRP, Ishikawa NK, Barbosa AM (2006): Antifungal activity of essential oil of Ocimum gratissimum L (Eugenol chemotype). Brazilian Arch Bio Tech. 49, 867-71.

Gilles L, Antoniotti S (2023): Chemica and olfactory analysis of the volatile fraction of ocimum gratissimum concrete from Madagascar. Chem biodiversity. 20, e202300252.

Guha P. Nandi S. Essential oil of Betel leaf (piper betle L) (2019): a novel addition to the world of food sector. Nat Swit. Available at https://10.1007/978-3-030-16546-8

Ibezim EC, Momoh MA, Onyishi VI, Nwabubike LA, Ibezim NE, Nzekwe NJ (2018): Phytochemical constituents and wound healing properties of ointment formulations of ocimum gratissimum crude aqueous leaf extracts. JOPHAS. Available at

ajol.info/index.php/jophas/article/view/16859

Idigo MA, Egbuche CM, Ezenwata IS, Onyemeka RM (2022). Phytochemical analysis and pesticidal effects of ocimum gratissimum leaf oil extract in the management of callosbruchus maculatus infecting vigna unguculata. WJARR. 16, 78-87.

Imosemi IO (2017): Neuroprotective effects of ethanol extracts of ocimum gratissimu leaf on monosodium glutamate- induced oxidative stress in developing wistar rat cerebellum. Afr J Med Med Sci. 46, 463-72.

Ilomuanya MO, Ajayi T, Cardoso-Daodu I, AKhimien T, Adeyinka O, Aghaizu C (2018): Formulation and evaluation of polyherbal anti-oxidant face cream containing ethanol extraction of Psidium gujava and Ocimum gratissimum. *N J Pharm Res.* 14, 61-68.

Joshi RK (2021): Anti-oxidant activity influenced by seasonal variation of essential oil constituents of ocimum gratissimum. ACS Food Sci Technol. 1, 1661-9.

Karthik P, Dutta S, Anandharmakrishnan C. Nanoemulsion preparation, stability and application in food. Available at taylorfrancis.com/chapter/edit/10.1201/9781315153872-8/nanoemulsionspreparation-stability-application-food-kathik-sayantani-dutta-anandharmakrishnan. Accessed 19th July, 2023.

Keziah EA, Nukenine EN, Danga SP, Younoussa L, Esimone CO (2015). creams formulated with Ocimum gratissimum L and Lantana camara L crude extracts and fractions as mosquito repellents against Aedes aegypti L. J Insect Sci. 15, 45.

Khaskar G, Assatarakul K, Srikantaramas S (2019): Effect of cold pressd and normal centrifugal juicing on quality attributes of fresh juices: do col-pressed juices harbour a superior nutritional quality and anti-oxidant capacity? Heliyon. 5, e01917.

King S, Jarvie H, Dobson P. Available at www.britannica.com/science/nanoparticles/nano-particle-application-in-materials. Accessed 24th October, 2023.

Kumar K, Srivastav S, Sharanagat VS (2021): Ultrasound assisted extraction of bioactive compouns from fruit and vegetable processing by-products: a review. Ultrason Sonochem. 70, doi.10.1016/j.ultsonch.

Kumar N (2021): Formation, characterization and oil industry applications of nanoemulsion: a review. J Pet Sci Eng. 206,: 1-24

Lesgards J, Baldovini N, Vidal N, Pietri S (2014): Anti-cancer activities of essential oil constituents and synergy with conventional therapies: A review. *Phytother Res.* 28, doi.10.1002/ptr.5165

Mahajan R, Tandon R, Kaila A, Mahajan BVC (2021): Nanoemulsion formulation of Ocimum Gratissimum essential oil and its

anti-fungal activity against penicillium digitatum. J Nanosci Nanotechnol. 21, 3556-65.

Maharaj S, McGaw D (2020): Mathematical model for the removal of essential oil constituents during steam distillation extraction processes. 8, doi/10.3390/pr8040400.

Meyer-Warnod. Natural essential oils (1984): Extraction processes and application to some major oils. *Perfume Flavours.* 9, 93-104.

Mfon RE, Hall SR, Sarua A (2020): Study on the effect of Ocimum gratissimum and Veronia Amygdalina plant leaf extracts and Ph in the synthesis of zinc oxide nanoparticles. *Scientia Africana.* 19, 25-36.

Moorthy IG, Maran JP, Muneeswari S, Naganyashree S, Shivamathi CS (2015): Response surface optimization of ultrasound assisted extraction of pectin from pomegranate peel. *IJBIOMAC*.72, 1323-8

Moradi S, Fazlali A, Hamedi H (2018): Microwave assisted hydro distillation of essential oils from rosemary: comparison with traditional distillation. Avicenna J *Med Biotechnol*. 2018, 1022-28

Ngujen NH, Phan NDH, Tran TTT, Nguyen BVH, Nguyen NL, Mai C (2022): Extraction of essential oil from Ocimum gratissimum L, Ocimum basilicum L, and Rosmarinus officinale cultivated in Vietnam using steam distillation method. Egypt J Chem. 65, 171-77.

Njoku OU, Joshua OU, Joshua P, Agu CV, Ogugua V, Dim NC (2011): Antioxidant properties of ocimum gratissimum. New York Sci J. 4, 98-103

Ohiagu FO, Chikezie PC, Enyoh CE (2021): Anti-cancer activity of Nigerian medicinal plants: a review. Future J Pharm Sci. 7, doi.org/10.1186/s43094-021-00222-6.

Okojie RO, Eghafon NO (2016): Assessment of ocimum gratissimum leaves on haematological parameters and cell mediated immunity of rabbits. Int J Basic Sci Tech. 2, 46-9.

Okonkwo S, Emeje M, Peters O, Okhale S (2020): Extraction and nanoencapsulation of Ocimum gratissimum leaf extract and its anti-mycobacterial activities. Chemistry and Materials. 12, 15-9

Onyebuchi C, Kavaz D (2020): Effect of extraction temperature and solvent type on the bioactive potential of Ocimum gratissimum L extracts. Scientific reports. 10, 21760

Ontao N, Athikomkulchai S, Tadtong S, Phuriwat , Chuda C (2021): Formulation, physical, and chemical stability of Ocimum gratissimum leaf oil Nanoemulsion. KEM. 901, 117-22.

Orafidiya LO, Agbani EO, Abereoje OA, Awe T, Abudu A, Fakoya FA (2003): An investigation into the wound healing properties of the essential oil of ocimum gratissimum linn. J Wound Care. 12, 331-4.

Osuagwu FC,Oladepo OW, Imosemi IO, Adewoyin BA, Aiku A, Ekpo OE et al (2004): wound healing properties of Ocimum gratissimum leaf in Wistar rats- a preliminary Study. Afr J Med Sci. 33, 23-6.

Orwa C, Mutua A, Kindi R, Jamnadass R, Simons A. Agroforestry database: a tree reference and selection guide. Available at http;//www.cabidigitallibrary.org. Accessed 19th July, 2023.

Prabu SL, Umamaheswari A, Rajakumar S, Bhuvaneswari PL, Muthupetchi S (2017): Development and evaluation of gel incorporated with silver nanoparticles from ocimum gratissimum for the treatment of acne. Am J Advanced Drug Del. 5, 107- 117.

Quian C, McClements DJ (2011): Formation of nanoemulsions stabilized by model food-grade emulsifiers using high pressure homogenization: Factors affecting particle size. Food hydrocolloids. 25(5), 1000-8.

Quezada-Moreno WF, Quezada-Torres WD, Proaño-Molina M, Mora-Gutiérrez M, Viva-Vivas M, Jiménez-Sánchez A et al (2019): Extraction and chemical characterization of essential oil of Tagetes pusilla in fresh and stored samples. AFINIDAD. 76, https://raco.cat/index.php/afinidad/article/view/361885.

Rai R, Suresh B (2014): Extraction of essential oil. *Ind J Trad Knowledge.* 23, 187-191.

Rojas-Sandoval J (2018): Ocimum gratissimum (African basil). *CABI Compen,* doi.org/10.1079/cabicompendium.115839.

Sahraoui N, Hazzit M, Boutekedjiret C (2017): Effects of microwave heating on the antioxidant and insecticidal activities of the essential oil of Origanum glandulosum Desf. Obtained by microwave steam distillation. J Essential oil Res. 2017, https//doi.org/10.1080/10412905.2017.1322009.

Sahouo GB, Tonzibo ZF, Boti B, Chopard C, Mahy JP, Yao TN (2003): Anti-inflammatory and analgesic activities: chemical constiteunts of essential oil of ocimum gratissimum, eucalyptus citriodora and cymbopogon giganteus inhibited lipo-oxygenase L1 and cyclo-oxygenase of PGHS. Bull Chem Soc Ethiop. 17, 191-197.

Sharma AD, Angish S, Thakur A, Sania S, Singh A (2022): Comparative phytochemistyr, antioxidant, anti-diabetic and anti-inflammatory activities of traditionally used Ocimum gratissimum, Ocimum basilicum and Ocimum tenuiflorum L. Bio Technologia. 103, 131-142

Shelar UB (2016). Microwave assisted extraction of Ocimum gratissimum. IJPPR.Human. 5, 111-5

Sneha K, Narayanankutty K, Job JT, Olatunji OJ, Alfarhan A, Famurewa AC et al (2013): Antimicrobial and larvicidal activities of different Ocimum essential oils

extracted by ultrasound-assisted hydrodistillation. 27, 1456

Thilakarathna RCN, Siow LF, Tang TK, Lee YY (2022): A review on application of ultrasound and ultrasound assisted technology for seed oil extraction. Open Access. 60, 1222-1236.

Ugbogu O.C, Okezie E, Agi GO, Ibe C, Ekweogu CN, Ude VC et al (2021): A review on traditional uses, phytochemistry and pharmacological activities of clove basil (ocimum gratissimum L). Helyion. 7, e08404.

Umeh OI, Babalola AS, Edoga JO, Chidi DI (2022): Evaluation of the healing properties of the crude oil extract of Ocimum gratissimum leaves on exicion wound in rabbit buck. IVSA. 17, 95-105.

Untapping the power of nature: Essential oil extraction methods. Available at www.newdirectionsaromatics.com/blog/articles/how-essential-oils-are-made.html. Accessed 3rd September, 2023.

Valdivieso-Ugarte M, Gomez-Llorente C, Plaza-Diaz J, Gil A (2019): Anti-microbial, anti-oxidant and immunomodulatory properties of essential oils: a systematic review. Nutrients. 11, doi.10.3390/nu11112786.

Venuprasad MP, Kandkattu K, Razack S, Khanum F (2014). Phytochemical analysis of ocimum gratissimum by LC- ESI-MS/MS and itsantioxidant and anxiolytic effect. South Afri J Bot. 92, 151-158.

West H. What are essential oils and do they work? Available at https://www.healthline.com/nutrition/what-are-essential-oils. Assessed 19th July, 2023.

Wildwood C (2018). Essential oils. In: Simon and Shuster editors. Encyclopedia of aromatherapy. Healing Arts Press, United Kingdom. Available at: www.simonandschuster.com. Assessed on 19th July, 2023