Journal of Innovative Research in Engineering and Science 2(1), March, 2011.
ISSN : 2141-8225
© Global Research Publishing, 2011.

# Development of Microcontroller-based Electric Power Distribution Automation System *(pp. 10-28)*

I.A. Adejumobi[1] , I.G. Adebayo[2] and A.J. Olanipekun[3]
[1]Electrical and Electronics Engineering Department,
University Of Agriculture, Abeokuta.
[2]Department of Electronics and Electrical Engineering,
Ladoke Akintola University of Technology, Ogbomoso.
[3]Electrical and Electronics Engineering Department,
University Of Agriculture, Abeokuta.
Correspondence E-mail: **engradejumobi@yahoo.com**

**Abstract:** The demand on the electric power for the household, commercial and industrial loads is on the increase. Also, the management of electric distribution system is becoming more complex. Lack of information at the base station on the status of the distribution network has been identified as the major bottleneck to its effective monitoring and control. This work is a development of Microcontroller-based Electric Distribution Automation system for the purpose of effective monitoring and control of distribution system. Designed components include Remote Terminal Unit (RTU) with Microcontroller(ATmega8A) as the major component for acquisition, monitoring, transmission and processing of data; Modulation and Demodulation (MODEM) module for serial data communication; Man–Machine interface(MMI) which is the Distribution Automation Software designed with Visual C-Sharp,2008 and it is residents on Personal Computer(PC). The modules circuits were built on the Printed Circuit Board (PCB) whose design was custom-made using PCB Editor Software. To authenticate the functionality of the developed MODEM, high frequency signals at the extremes 50 kHz, 100 kHz, 200 kHz and 500 kHz, using 12volts signal source was impressed on MODEM. The responses shown on the Oscilloscope indicated that it is possible, using the developed system, to generate the high frequency signals necessary to establish communication between the distribution substation (DSS) modules. The next stage of this work is the implementation.

**Key words**: distribution automation, microcontroller, modulation, demodulation, remote terminal unit, interfacing.

## 1 INTRODUCTION

Electric power is essential to all areas of human life. However, the generated electric power, irrespective of its capacity has very little value or importance if it cannot be effectively and efficiently distributed. Usually, in Nigeria due to the absence of an

automatic monitoring and control system on distribution network, which is the major link between electricity utilities and the consumers of electricity, excessive current resulting from overloading occurs. More so, lack of adequate information at the base station on the status of distribution network is another bottleneck in obtaining efficient distribution of electric power.

Why in Nigeria, efforts have been made to include automation scheme in the operation and control of our generation and transmission system, relative scanty attention is being given to distribution system automation. This research work is a development of microcontroller-based electric power distribution automation system for the monitoring and control of significant parameters at the secondary distribution system. These parameters include the voltage of each of the three phases and the corresponding loading from the substation transformers. The Automation system makes use of communication system techniques and computer software to transport data to and from base station to load end.

## 2 DISTRIBUTION AUTOMATION

To cope with the complexity of the distribution network, the latest computer, communication and distribution technologies need to be employed (http://www.iitk.ac.in and Pabla, 2000). The word Automation means doing the particular task automatically in a sequence with faster operation (Palak, 2009). Automation in the power distribution allows utilities to implement flexible control of distribution systems, which can be used to enhance efficiency, reliability, and quality of electric service (Gupta and Varma, 2005).The Distribution automation (DA) system is also referred to as the Distribution Management System (Pabla, 2000). In this research work, attention is given to Secondary Distribution Automation with specific interest in service restoration after transient fault occurrences and protection of consumers from overvoltage and under-voltage situations, and also to protect the distribution transformer from overheating due to overload. Real-time information on the condition of the remotely located distribution substation will be made available to the distribution control centre for decision making by the operator. The operator can receive substation status signals and send commands or control signals to the substation via a Personal Computer (PC) connected to the substation through Power Line Carrier Communication (PLCC).

At the core of the distribution automation system being proposed is a microcontroller which is simply a computer on a chip. This is used to develop a circuit that will be used to collect, monitor, process and transmit data such as voltage and current measurements from the substation to the remote control centre; and in return receive control signals and set-points from the base station.

### 2.1 Distribution Automation (DA) Realization

In distribution automation system, the various quantities (*e.g.*, voltage, current, switch status, temperature and oil level, etc.) are recorded in the field at the distribution transformers and feeders, using a data acquisition device called Remote Terminal Unit (RTU). These quantities are transmitted on-line to the base station through a

communication media. The acquired data is processed at the base station for display on computers through a Graphic User Interface (GUI). In the event of a system quantity crossing a pre-defined threshold, an alarm is generated for operator intervention (Theraja and Theraja, 2005).

In DA system, the system data consisting of the status signals and electrical analog quantities are obtained using a suitable Data Acquisition System and processed by the control computer for typical functions of fault detection, isolation and network reconfiguration for supply restoration. Distribution Automation involves the following processes (Pabla, 2000):

- Data Collection/Acquisition
- Data Monitoring
- Data Processing
- Data Transmission
- Man-Machine Interfacing

## 2.2 The Distribution Automation Scheme

The distribution automation system will be made up of features as described in *the* figure 1. However, these features when configured, can be used at a lower voltage (415V three-phase) . The RTU collects substation parameters at the Distribution substation (DSS) and routes same to the modulation and demodulation module ( MODEM) at the DSS side. The MODEM converts the digital signal (representing the measured parameters – voltages and currents) to modulated analog signal and vice versa. There are two MODEMs – one used for the Distribution Control Centre( DCC) side and one used for the DSS side. The MODEM at the DSS converts the digital signal to modulate analog signal by impressing it on the carrier. The digital signal is obtained from the RTU while the carrier signal is internally generated by the MODEM. The modulated signal is then coupled to the power line through the line coupler. The line coupler blocks the 50Hz power voltage, preventing it from reaching the MODEM and the RTU. The line trap prevents the high frequency communication signal from being short-circuited by the low impedance of the DSS transformer or the DCC transformer.

At the DCC side, the modulated signal present on the transmission line is coupled to the MODEM at the DCC by the line coupler. The MODEM then demodulates the modulated signal (extracting the original modulating digital signal initially impressed on the carrier at the DSS). The digital signals are then transmitted to the Personal Computer (PC) via the serial interface (RS-232). The software on the PC then analyses the 1's and 0's in the digital signal and displays on the interface the measured phase voltages and currents of the transformer at the DSS.

The DA Software Interface gives visual indication of the various readings of the transformer at the DSS and commands can be sent to remotely shutdown the substation in case of unsatisfactory readings. This makes the communication a full-duplex (two-way) communication. This shutting down can also be automatically performed by the

microcontroller in the RTU if configured in software to do so. The complete modules for Distribution Automation when it is connected are shown in figure 2.

## 3 REMOTE TERMINAL UNIT (RTU)

All the functions of data acquisition, monitoring, transmission, and processing are usually performed by a single unit called the Remote Terminal Unit (RTU). As the name implies, a remote terminal device, RTU, is an Intelligent Electronic Device (IED) that can be installed in a remote location, and acts as a termination point for field contacts. IEDs are (Instrumentation and Control (I&C) devices built using microprocessors (David, 1999). The RTU records and checks measured values before transmitting them to control station and in the opposite direction transmits commands, set point values and other signals to the monitored substation (David, 1999).

### 3.1 Design Consideration for the RTU

The remote terminal unit is designed around a microcontroller – the ATmega8. The design calculations and the choice of the components have been presented in (Adejumobi and Adetomi, 2009), but the designed circuit is shown in figure 3.

The transformers T1 to T3 represent the distribution substation transformers whose line currents and voltages are to be measured. T4, T5 and T6 are 220V/12V potential transformers (PTs) used for stepping down the phase-to-phase voltages for measurement (metering) and supply of low voltage to power the whole circuit.

D1 through D6 are bridge rectifiers used to convert the alternating (analog) current and voltage signals to dc (still analog). Advantages of using bridge rectifiers include: reduced inverse voltage rating per diode and reduced size of smoothing capacitor needed.

T7, T8 and T9 are current transformers and are used to scale down the high-current of the power line for metering.

U7, U8 and U9 are opto-couplers used to interface the microcontroller to the relays and the MODEM. The PC817 with an isolation voltage of 5kVrms (Sharp Corporation, 1996) is an opto-coupler suitable for this application.

D10 is a green LED to indicate that power is supplied to the circuit; R7 is the series dropping resistance to limit the current flowing in the diode. For a green LED, the forward voltage is typically 2.2V (Paul, 2000). The regulators 7805 and 7812 are used to provide regulated dc voltages of 5V and 12V for the board. The 78XX series of regulators can provide up to 1A current and they have excellent characteristics that render them useful for this application. These characteristics include: thermal overload protection and short circuit protection. (Fairchild, 2001).

U6 is the microcontroller ATmega8A. The ATmega8A is a high-performance, low-power AVR® 8-bit Microcontroller. It has six multiplexed ADC channels (in the PDIP package) which make it useful for the intended application and produces a 10-bit resolution result for the ADC output. It has 32x8 general-purpose working register and up to 16MIPS (Mega Instructions Per Second). One other reason in the favour of the choice of ATmega8A is the

fact that it has inbuilt capability for Universal Synchronous/Asynchronous Receiver/Transmitter, which has specifications for communicating with the PC. The firmware on the microcontroller executing the Distribution Automation algorithm is presented with flowchart of figure 4.

## 4 DATA COLLECTION, TRANSMISSION AND THE APPLICATION OF MODULATION AND DEMODULATION MODULE (MODEM)

Data transmission includes all the features required to transmit the collected and processed data from the substation/process location to the base station (Distribution Control Centre) and in converse to transmit commands and set points from the control centre to large number of remotely located devices. Acquired data can be used locally within the device collecting it, sent to another device in a substation, or sent from the substation to one or several databases for use by operators, engineers, planners, and administration (David, 1999). A wide range of communication technologies is available to perform the task of DA system. Some of these include public telephone communication (leased or dedicated line), power line carrier communication (PLCC), UHF MARS (Ultra High Frequency Multi Address Radio System)(http://en.wikipedia.org) .

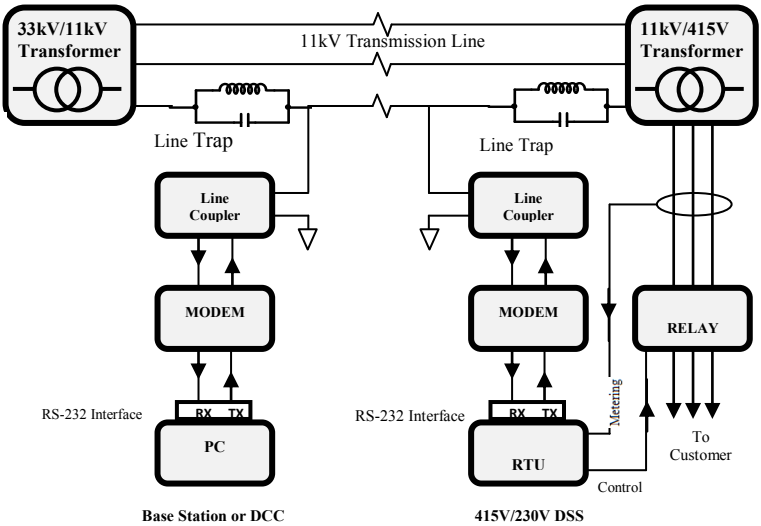


**Figure 1: The Distribution Automation Scheme**




**Figure 2 : The Connection of the Different Modules**

## 5 POWER LINE CARRIER COMMUNICATION (PLCC)

Power Line Carrier Communication involves the transmission of data over power lines. Since power lines are designed to carry high voltages, coupling circuits and Line trap are usually made use of to block the 50/60Hz voltage from the communications circuit and impress the high frequency communication signal on the line (Miriam et al,2000). Also, the fact that power lines are actually designed to carry low frequency signals imposes some technical challenges at the high frequency needed for communication. Of importance also are the huge noises and ever varying levels of impedance and attenuation attendant in the power line.

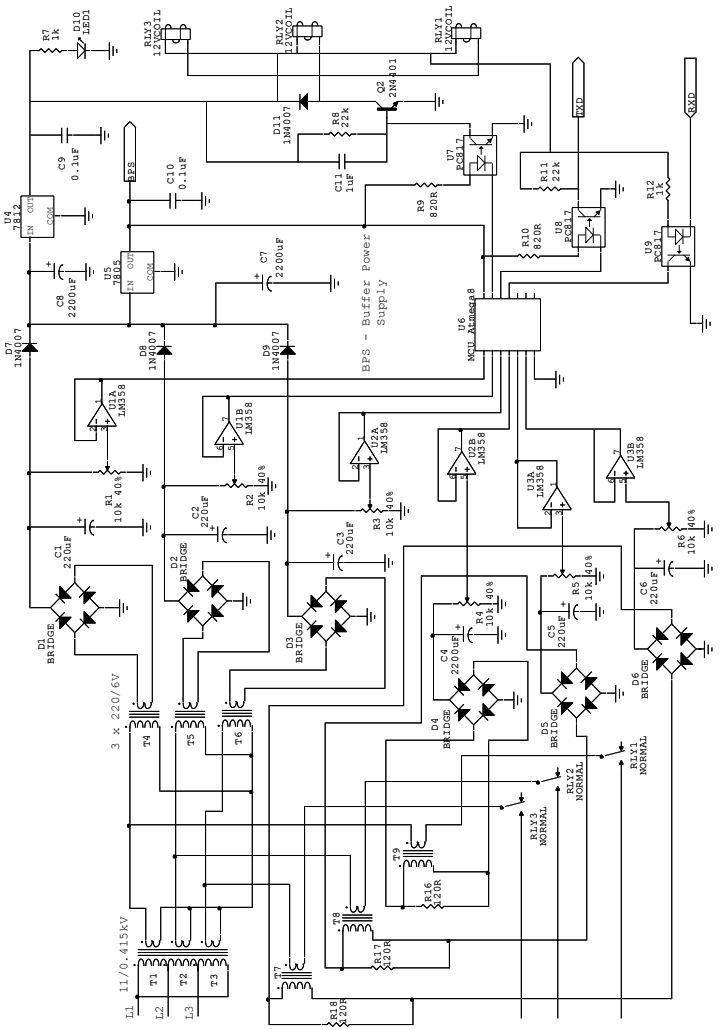


**Figure 3: The RTU Circuit**

## 6 MODULATION-DEMODULATION METHOD

Since the system relies on the microcontroller for its working and microcontrollers operate basically on digital data, it will be necessary only to consider digital modulation schemes. Usually, the power line is a hostile environment for communication. This is partly due to its intense noise levels and the harmonics due to switching and corona (Pabla, 2000 and Wadhwa, 2005). With the use of Frequency Shift Keying modulating method, the effects of noise are highly reduced (Wadhwa, 2005).Hence the Frequency Shift Keying modulating method has been adopted for this work.

The detail of modulating and demodulating using FSK MODEM have been fully discussed in (Adejumobi and Adetomi, 2009). The full design and operation of the Frequency Shift Keying were also presented.

### 6.1 The Choice of Carrier Frequency and Bandwidth Requirement:

The bandwidth of a system is the range of frequency over which the system will work satisfactorily. The bandwidth of a communication system determines to a great extent, the amount or speed of data transmitted. This is because there is a close relationship between the range of frequency allowable or used for transmission and the data transmission rate (measured in bps – bits per second). The bandwidth requirement of a BFSK is given by (Behrouz, 2007):

$$BW = S(1 + m) + 2\Delta f \quad (1)$$

where, $S$ = baud rate,

$m$ = modulation index, and

$$2\Delta f = f_2 - f_1 \quad (2)$$

Where $f_1$ $and$ $f_2$ are lower and upper bands of the bandwidth.

The modulation index is the ratio of the frequency deviation to the modulation frequency and this is equal to (Theraja and Theraja, 2005).

$$m = \frac{frequency\ deviation}{modulation\ frequency} \quad (3)$$

The baud rate measures the number of signal or symbol changes per second as against the data rate which measures the bit rate (bits per second – bps. The relationship between baud rate and data rate can be expressed as (Microsoft, 2009):

$$S = \left(N \times \frac{1}{r}\right)\ baud \quad (4)$$

where, $N$ is the data rate (bps) and $r$ is the number of data elements carried in one signal element. The data element is the smallest piece of information to be exchanged, which is the bit (1 or 0). On the other hand, the signal element is the smallest unit of a signal that is constant.

It may have to be noted that in analog transmission r can be expressed as:

$$r = \log_2 L \quad (5)$$

where, $L$ is the type of signal element, not the level. $L$ is 2 for BFSK.

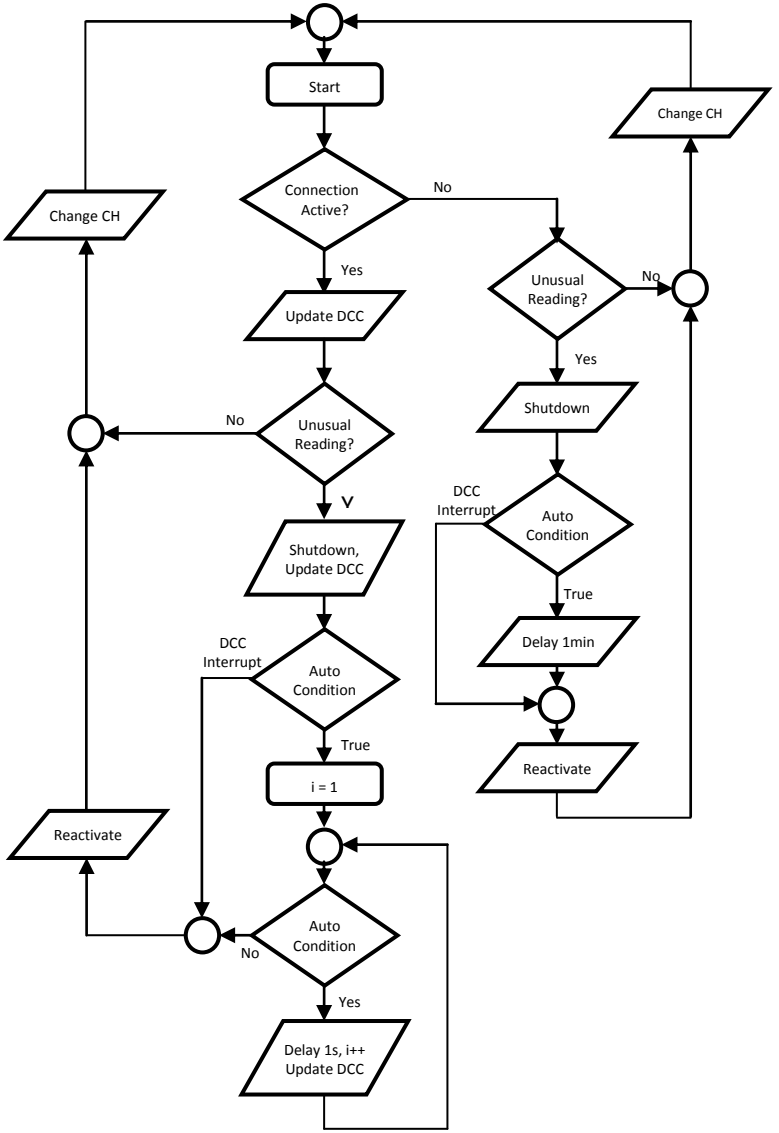


**Figure 4: Distribution Automation Algorithm**

## 7 SERIAL COMMUNICATION

Serial communication involves the transmission of data by sending one bit (binary digit) at a time over a single communication channel. Compared to parallel communication, where a byte (group of eight bits) are sent at the same time over eight separate communication media (one bit per time over each of the lines), serial communication requires only one channel and thus is more economical though relatively slow because of the additional bits needed for synchronization. Since the power line cannot render more than three communication channels (three-wire, three-phase system is used for distribution at the primary level), then it is clear that the best mode of communication to use is the serial data communication (Weedy, 1998)

## 8 DATA FLOW

Communication between two devices can be simplex, half-duplex, or full-duplex. For effective communication between the Distribution Control Center (DCC) and the Distribution Substation (DSS), a full-duplex mode of data flow (Microsoft, 2009) is employed between the DCC Powerline MODEM and the DSS Powerline MODEM as shown in figure 5.

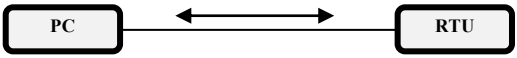


**Figure 5: Full-duplex Mode of Data Flow between DCC and DSS**

## 9 MAN-MACHINE INTERFACING

The Man-Machine Interface (MMI) is the interface between man and technology for control of the technical process. The computer system at the master control centre or central control room integrates with RTU over the communication link with its transmission protocol, acquires the remote substation or distribution transformer/feeder data and transfers the same to the computer system for man-machine interface.

The Man-Machine Interface used for this work is software (DA software) resident on a PC. The software was designed using Visual C-Sharp in the Microsoft Visual Studio 2008 Interactive Development Environment (IDE). Some of the features built into this software include:

- Visual indication of the load (current loading) status of each of the phases
- Visual indication of the voltage status of each of the phases
- Visual indication of the substation connection status
- Load profile indication – daily, hourly and minute-wise
- Logging capability
- Auto-control capability of the operations at the DSS

The captured screen diagram of the interface designed is shown in figure4.

## 10 THE USE OF MICROCONTROLLER

The microcontroller is a specialized microprocessor that houses much of the support circuitry onboard, such as ROM, RAM, serial communications ports, A/D converters, etc. In essence, a microcontroller is a minicomputer, but without the monitor, keyboard, and mouse. They are called microcontrollers because they are small (micro) and because they control machines, gadgets, etc. With one of these devices, one can build an "intelligent" machine, write a program on a host computer, download the program into the microcontroller via the parallel or serial port of the PC, and then disconnect the programming cable and let the program run the machine.

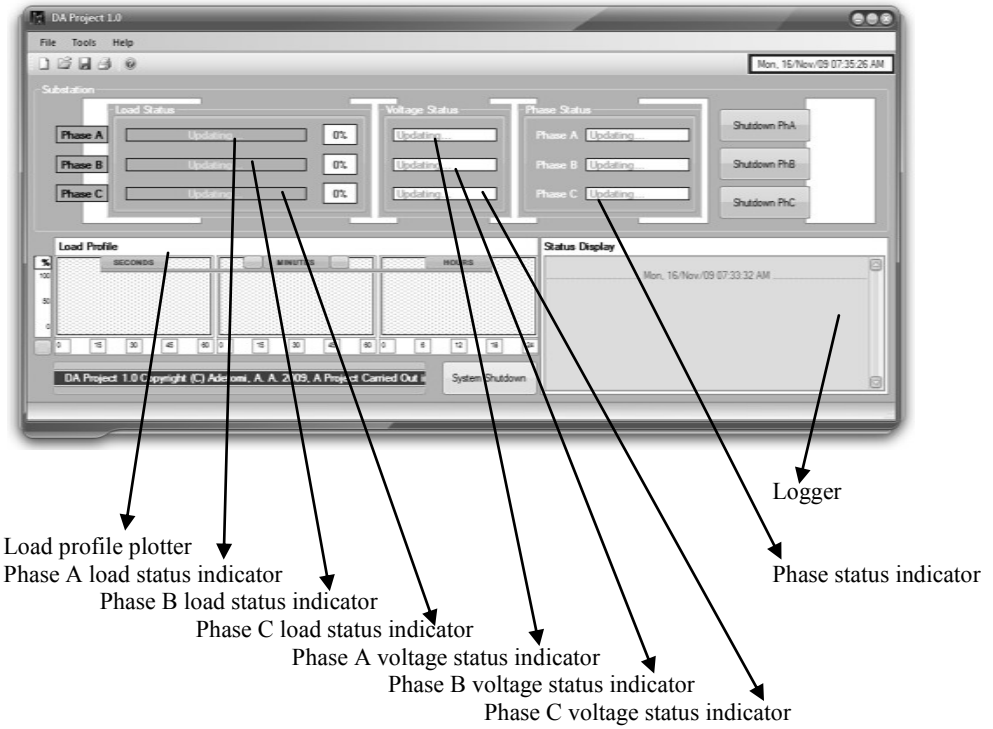


**Figure 6: The DA Software Interface**

## 11 DATA COMMUNICATION PROTOCOL

The analog values of the voltages and current loading of the phases are converted to digital by the microcontroller through its internal ADC peripheral. The ATmega8 microcontroller being used has six (6) ADC input channels (PDIP package) that are internally multiplexed and can be selected by software. The communication protocol employed is proprietary in nature, in that it is specific to the application. Eight bits are used for each transmission from the RTU to the base station. The three most significant bits (MSBs) represent the address while the five least significant bits (LSBs) represent the value of the actual data being transmitted. The analog input channel is selected by writing to the MUX bits in the ADMUX (ADC Multiplexer Selection) register. The values of the last three bits in ADMUX (bits 3:0 – MUX3:0) select which analog inputs are connected to the ADC (figure 7)

| Bit | 7 | 6 | 5 | 4 | 3 | 2 | 1 | 0 | |
|---|---|---|---|---|---|---|---|---|---|
| | REFS1 | REFS0 | ADLAR | – | MUX3 | MUX2 | MUX1 | MUX0 | ADMUX |
| Read/Write | R/W | R/W | R/W | R | R/W | R/W | R/W | R/W | |
| Initial Value | 0 | 0 | 0 | 0 | 0 | 0 | 0 | 0 | |

**Figure 7: The ADMUX Register**

The ADC generates a 10-bit result which is presented in the ADC Data Registers, ADCH and ADCL. By default, the result is presented right adjusted, but can optionally be presented left adjusted by setting the ADLAR bit in ADMUX.

The C-coding for preparing the parameter measured for transmission to the DCC as outlined below.

```
/*-------------------------------------------------------------
---
 *----------FUNCTION to prepare data for transmission--------
---
 *-------------------------------------------------------------
-*/

 unsigned char dataPrepare(unsigned char ADCvalue)
 {
      unsigned char data = 0x00;

      //Clear the three LSB using dataExtract = 0xF8
      //Shift the result right by 3 to convert it to 5-bits
      data = (ADCvalue & dataExtract)>>3;

      //Retrieve the current channel
      int channel = (ADMUX & 0x07);
```

```
        //Add the address/channel value to the data.
        //The channel value is first shifted left 5 times to
        //make it 8-bits then it is ORed with the 5-bit data
        //to give an 8-bit data for transmission
        data += (channel<<5);

        return data;
}
```

When the transmitted data (that has the channel/address information included) reaches the PC at the Distribution Control Centre (DCC), the address and data are extracted by using similar manipulations as for the transmission. Written below is the C-sharp code part of the DA Software responsible for extracting the address and the data information. Once this is done the data is appended to the appropriate *object* in the software referenced by the address. (Note that an object on the DA Software interface means any control e.g. a progress bar or text editor).

```
#region Address Extractor

//Address extractor method definition
int AddressExtractor(int var1)
{
    const int addressExtract = 0xE0;
    int address = (var1 & addressExtract) >> 5;
    return address;
}

#endregion

#region Data Extractor

//Data extractor method definition
int DataExtractor(int var1)
{
    const int dataExtract = 0x1F;
    int data = (var1 & dataExtract);
    return data;
}

#endregion
```

## 12 THE DA SOFTWARE INTERFACE CODE

The software was designed using Visual C-Sharp in the Microsoft Visual Studio 2008 Interactive Development Environment (IDE). The code contains about 10 forms depicting subroutines, the detail of which has been presented in (Adejumobi and Adetomi, 2009).

## 13 THE HARDWARE DESIGN AND CONNECTION

The circuits were put together on PCB (Printed Circuit Board). The PCB design was custom-made using PCB Editor Software. The layout printed from the computer was transferred to a mesh using artistic exposure, after which a resist (artist paint) was used to transfer the layout onto the board. The board was then dipped in a warm etchant to remove the unwanted copper area. The details of the hardware components assembly and connections have been presented by (Adejumobi and Adetomi, 2009). However, the RTU layout on PCB is shown in figure 8.

## 14 RESULTS AND DISCUSSION

To authenticate that it is possible to generate from the built DCC and DSS MODEMs the high-frequency capable of establishing communication between the distribution control centre (DCC) and the distribution substation (DSS), the outputs from the MODEMs were measured through terminals U3, using the oscilloscope as shown in figure 9a **.**

The signal as taken at pin3 (output) of the HEF4046 designed as transmitter (U3 in the MODEM circuit of 9b. The potentiometer R22 of value 100 kΩ was varied in order to observe on the oscilloscope the high-frequency signals at the extremes of 50 kHz and 500 kHz, and also at the desired centre frequencies of 100 kHz and 200 kHz. The waveforms observed are shown in figures 9c – 9f

It is to be noted that the peak-to-peak voltages of the high-frequency signals, as seen on the oscilloscope are about 12V as expected . The volt/div setting of the oscilloscope used for the testing was set at 5volts/div. Each division has five (5) grids. So as it can be seen in figures 9b- to 9f, that there are about 12 grids from peak-to-peak on the oscilloscope. This corresponds to:

$$\frac{12grids}{5grids} \times 5Volts = 12Volts$$

This is the voltage that will be impressed on the power line through the power line coupler. From the testing it has been observed that it is possible to achieve the desired frequencies of operation: 100/120 kHz at the DSS and 200/220 kHz at the DCC.

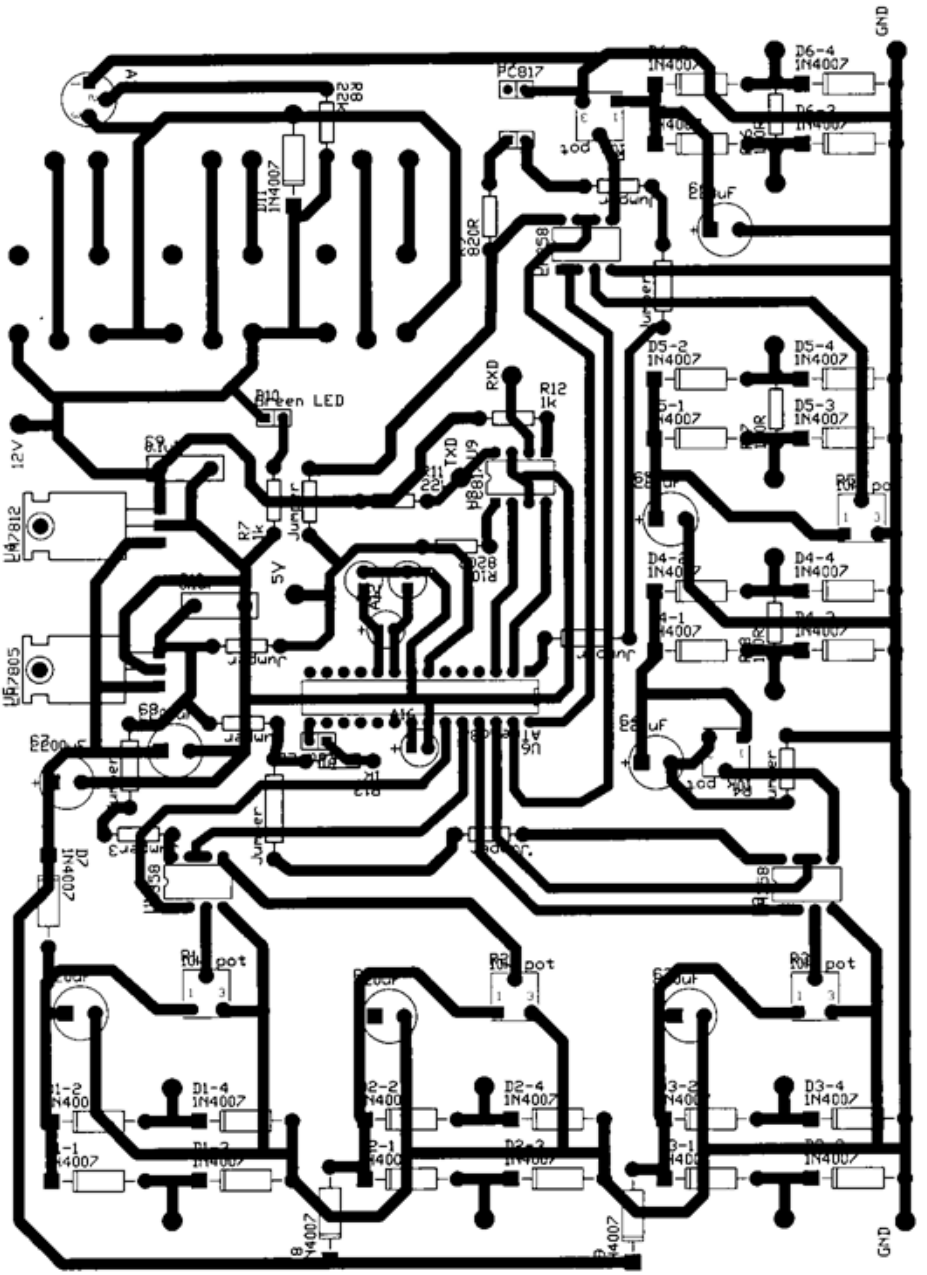


**Figure 8: The RTU PCB Layout**

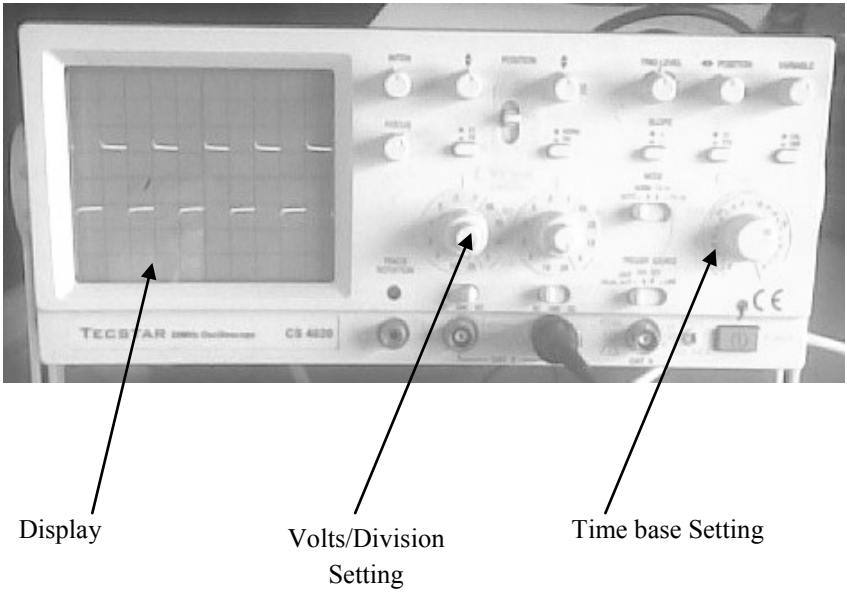


**Figure 9a: Amplitude and the Frequency of the Measured Signals.**

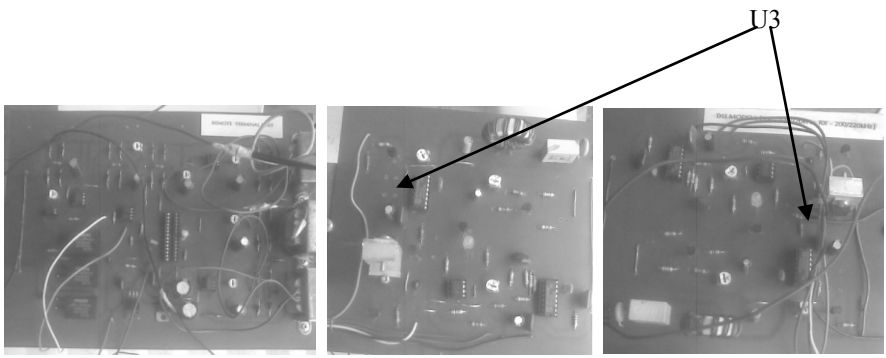


**Figure 9b: The Built Module Showing Terminals U3.**

**50 kHz (20 μs period)**

Oscilloscope setting: VOLT/DIV - 5V/DIV ( Amplitude of the displayed signal)
TIMEBASE - 10 μs/DIV (Frequency of the displayed signal)

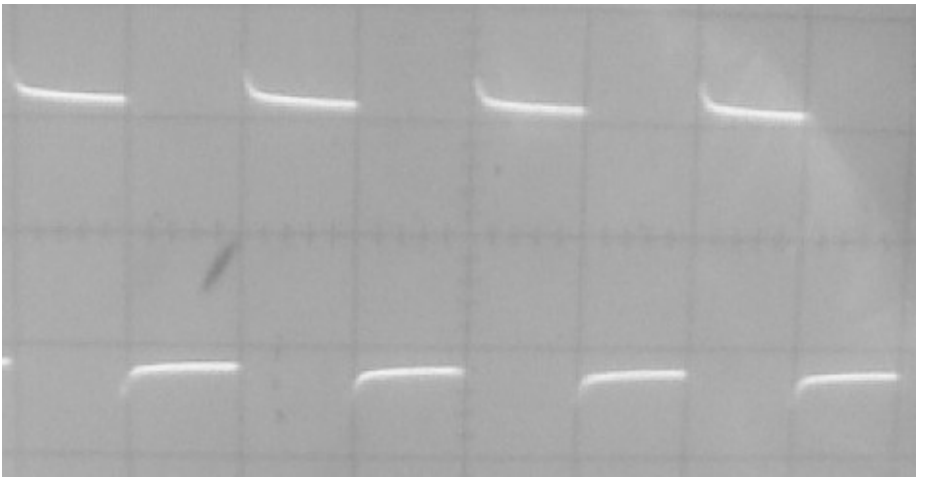

**Figure 9c: Waveform Observed at 50 kHz**

**100 kHz (10μs period)**

Oscilloscope setting: VOLT/DIV - 5V/DIV( Amplitude of the displayed signal)
TIMEBASE - 5μs/DIV( Frequency of the displayed signal)

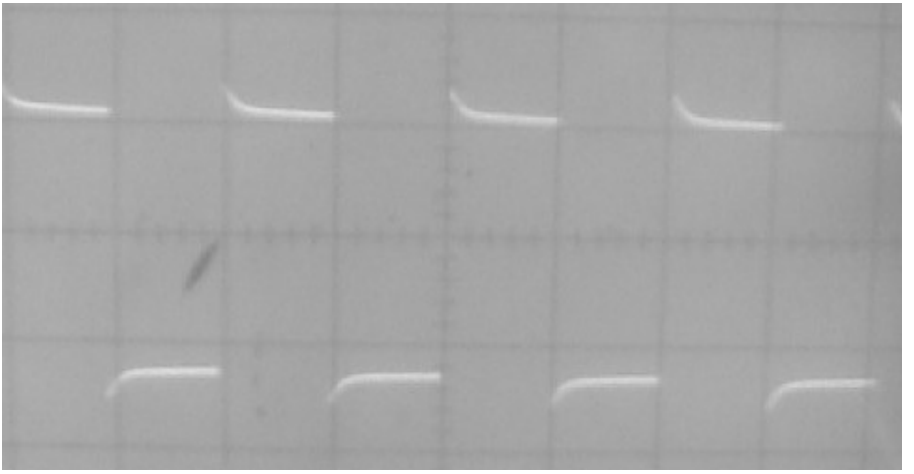

**Figure 9d: Waveform Observed at 100 kHz**

**200 kHz (5μs period)**

Oscilloscope setting: VOLT/DIV - 5V/DIV( Amplitude of the displayed signal)
TIMEBASE - 5μs/DIV( Frequency of the displayed signal)

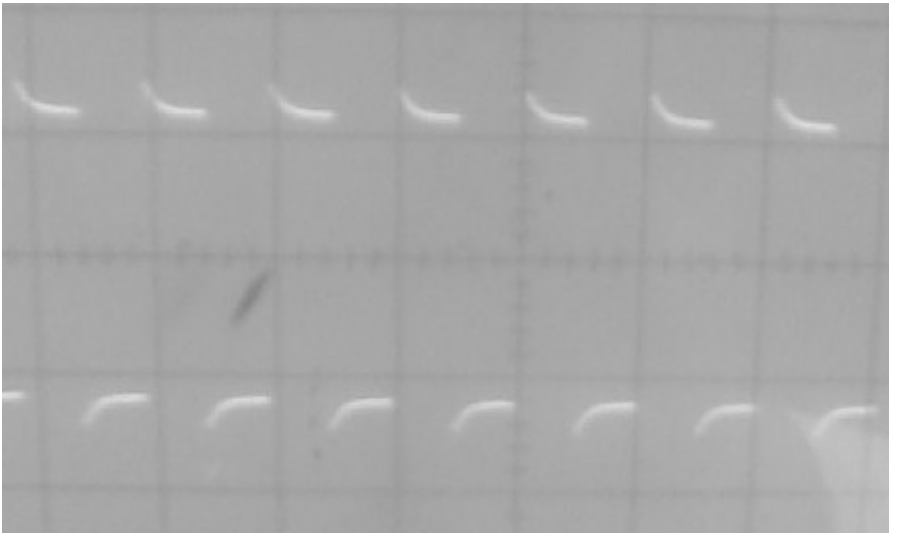

**Figure 9e: Waveform Observed at 200 kHz**

**500 kHz (2μs period)**

Oscilloscope setting: VOLT/DIV - 5V/DIV( Amplitude of the displayed signal)
TIMEBASE - 1μs/DIV( Frequency of the displayed signal)

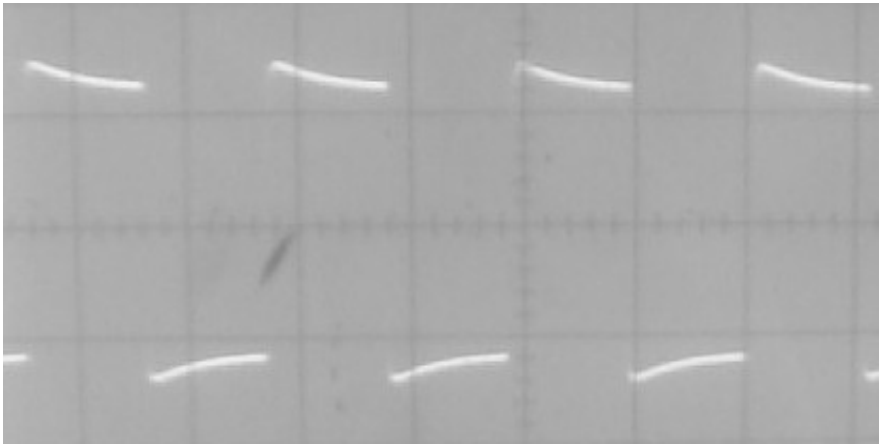

**Figure 9f: Waveform Observed at 500 kHz**

## 15 CONCLUSION

The use of automation system for the monitoring and controller of electric distribution system has been identified as one of the major way to provide efficient and reliable electric power to electricity consumers. The developed Distribution Automaton system is much necessary for continuous update at the base station, of the loading situations and the state of distribution system.

The developed modules have been tested and found to dependable and reliable. It is flexible, and so the communication speed for data can be updated as load and distance vary. When the automation scheme is fully implemented, it will allow automation judgement and control of electric power to consumers. The use of microcontroller has been shown to be a good platform upon which the distribution automation can be developed. Its flexibility in programming allows for easy future modification and implementations.

The Distribution Automation scheme is recommended for all appropriate utilities responsible for electric power distribution management in order to engender a better quality of service to consumers of electricity in Nigeria.

## 16 REFERENCES

Adejumobi, I.A and Adetomi, A.A (2009). "Development of Microcontroller-based Electric Power Distribution Automation System", a final year (B.Eng) Thesis, Submitted to the Department of Electrical/Electronics Engineering, University of Agriculture, Abeokuta, Nigeria.

Behrouz, A. F. (2007). *Data Communication and Networking*. McGraw-Hill: New York

David, J. D. (1999): *"Power System Automation"* Schweitzer Engineering Laboratories, Inc. Pullman, WA USA.

Fairchild Semiconductor® (2001). KA78XX/KA78XXA 3-Terminal 1A Positive Voltage Regulator. Pg 1.

Gupta, R. P. and Varma, R. K. (2005). Power Distribution Automation: Present Status. *Academic Open Internet Journal*, Volume 15.

Indian Institute of Technology Kanpur (2009). Automatic Power Distribution. [Online].Available:http://www.iitk.ac.in/infocell/Archive/dirmar1/power_distribution.html

Microsoft® Encarta® 2009. © 1993-2008 Microsoft Corporation. All rights reserved.

Miriam, P. Sanders and Roger, E. Ray: Power Line Carrier Channel & Application Considerations for Transmission Line Relaying,Pulsar Technology, Inc,Coral Springs,Available:http://www.pusattech.com/docs. Pg 11.

Pabla, A.S (2000). *Electric Power Distribution*, Tata McGraw-Hill Publishing Co. Ltd, New Delhi,(4th Edition)

Palak Parikh (2009): *Distribution System Automation* ES 586b Course Project Report, Pp. 1 – 9.

Paul Scherz (2000). *Practical Electronics for Inventors*. McGraw-Hill

Sharp Corporation (1996). Device Specification for Photocoupler, Model No. PC817. Pp 1 – 4.

Theraja, B. L. and Theraja, A. K. (2005). *A Textbook of Electrical and Electronic Engineering.* S. Chand & Company LTD : New Delhi.

Wadhwa, C. L. (2005). *Electrical Power Systems*. New Age International (P) Ltd., Publishers: New Delhi. Pp. 656 – 657.

Weedy, B. M. (1998). *Electric Power Systems*. Second Edition, John Wiley and Sons, London.

Wikipedia(2009). Powerline communication.[Online].Available: http://en.wikipedia.org/wiki/Power_line_communication