UNIZIK JOURNAL OF AGRICULTURAL AND BIOSYSTEMS ENGINEERING

Journal homepage: https://journals.unizik.edu.ng/ujabe/

UJABE

August (2026), 1(4): 99-112

ISSN:3141-2912

ISOCHORIC PRETREATMENT AND NANOCOMPOSITE PACKAGING IMPACT ON VITAMIN C AND MICROBIAL STABILITY OF JUTE MALLOW

Adeshina Fadeyibi[1], *Aisha Muhammad Ahmad[1], Opadiran Zainab Omolola[2] and Muhammed Kawata A[3].

[1]Department of Food and Agricultural Engineering, Faculty of Engineering and Technology, Kwara State University, Malete.

[2]Department of Food Science and Technology, Institute of Applied Sciences, Kwara state Polytechnic, Ilorin.

[3]Department of Agricultural and Bio-environmental Engineering, Institute of Technology, Kwara state Polytechnic, Ilorin.

**Corresponding Author's E-mail: ahmadaaiishah@gmail.com*

Received: 19th August 2026; **Accepted:** 26th August 2026; **Available Online:** 31st August 2026

ABSTRACT

Rapid moisture loss, nutritional deterioration, and microbial spoiling are the main causes of postharvest losses in leafy vegetables. The quality of jute mallow leaves subjected to isochoric pretreatment and nanocomposite packaging during refrigerated storage was assessed in this study. Starch-based nanocomposite films reinforced with peanut shell nanoparticles were produced for packaging, and an isochoric pretreatment chamber was designed and built to provide a constant-volume thermodynamic environment under subfreezing temperatures. The chamber maintained stable constant-volume conditions during cooling. Vitamin C content declined from 0.74 ± 0.10 to 0.46 mg/100 g ± 0.01 during storage, while total viable count and yeast and mold count increased from 5.04 $\log_{10}$ to 6.14 $\log_{10}$ CFU/g and YMC from 2.61 $\log_{10}$ to 3.73 $\log_{10}$ CFU/g, respectively, over 15 days, although all samples maintained microbiological stability. The 18 µm nanocomposite film provided better microbial control and storage stability than the 16 µm film. Overall, the combination of isochoric pretreatment and nanocomposite packaging, effectively preserved the nutritional and microbiological stability of jute mallow leaves, demonstrating its potential as a sustainable preservation approach for highly perishable leafy vegetables.

Keywords: Isochoric preservation, *Corchorus olitorius*, nanocomposite film, Vitamin C retention, refrigerated storage.

1.0 INTRODUCTION

An essential component of post-harvest processing for green leafy vegetables (GLVs) is extending their shelf life (Sapna et al., 2024). Despite the difficulties these fresh leafy greens provide, their rich nutritional profiles and vivid colors make them a vital component of the diet (Farha et al., 2018; Sarma et al., 2024). Reducing postharvest losses has several advantages, such as increasing food supply and availability, which could eventually improve food security; raising household incomes through additional food sales; and easing the strain on the climate, energy, water, and land resources by lowering greenhouse gas emissions and making effective use of finite natural resources (FAO 2022, Aragie et al., 2018, Lipinski et al., 2017; Shafiee-Jood et al., 2016). Bioactive compounds such as glycosides, polysaccharides, triterpenes, ionones, phenolics, sterols, and fatty acids are abundant in the genus Corchorus (Kumari et al., 2019). Hassan et al. (2019)

conducted a study to determine the lipid contents (fatty acids, phytosterols, and hydrocarbon components) of the seeds, roots, leaves, and stems of *C. olitorius* as well as the seeds and vegetative part of C. capsularis. The results indicated that cholesterol was the main compound. To delay the deterioration of green vegetable quality, traditional preservation methods such as freezing, hoover packing, controlled environment packaging, and refrigeration have been widely employed. These techniques often do not completely avoid tissue damage, even while they reduce respiration rates and microbial growth. Cellular structures may be disturbed by ice crystal formation during freezing, which may result in membrane rupture, textural deterioration, nutritional losses, and a faster deterioration in quality after thawing. These limitations have prompted interest in alternative preservation techniques that can maintain cellular integrity while extending shelf life.

The application of nanotechnology in food systems has resulted in a wide range of novel products with improved food quality attributes such as texture, taste, sensory properties, stability, and so on (Anand Haramakrishnan and Parthasarathi, 2019). Research has shown that isochoric systems can prevent the formation of ice crystals, reduce cellular damage, maintain nutritional quality, and extend the shelf life of extremely perishable goods. Recent advances in isochoric preservation have shown great promise for preserving the quality of a variety of food items during cold storage, including fruits, vegetables, seafood, and meat. (Bilbao-Sainz et al., 2019; Bilbao-Sainz et al., 2020; Bilbao-Sainz et al., 2021). Despite these promising findings, studies on the application of isochoric preservation technologies, which are primarily concerned with fruits, root crops, and products generated from animals, continue to pay very little attention to leafy greens.

However, little is known about the use of isochoric pretreatment for native green vegetables in Africa, especially *Corchorus olitorius*. In a similar vein, the current study combines starch-based peanut shell nanocomposite packing with isochoric pretreatment, followed by refrigerated storage. The evaluation of this combination preservation sequence for jute mallow leaves utilising three isochoric temperatures, three pretreatment times, and two nanocomposite film thicknesses, followed by refrigerated storage, is what makes the current work innovative. Thus, the objective of this study was to assess how effectively isochoric pretreatment and nanocomposite packaging maintains the qualitative attributes of jute mallow leaves during refrigerated storage.

2.0 MATERIALS AND METHODS

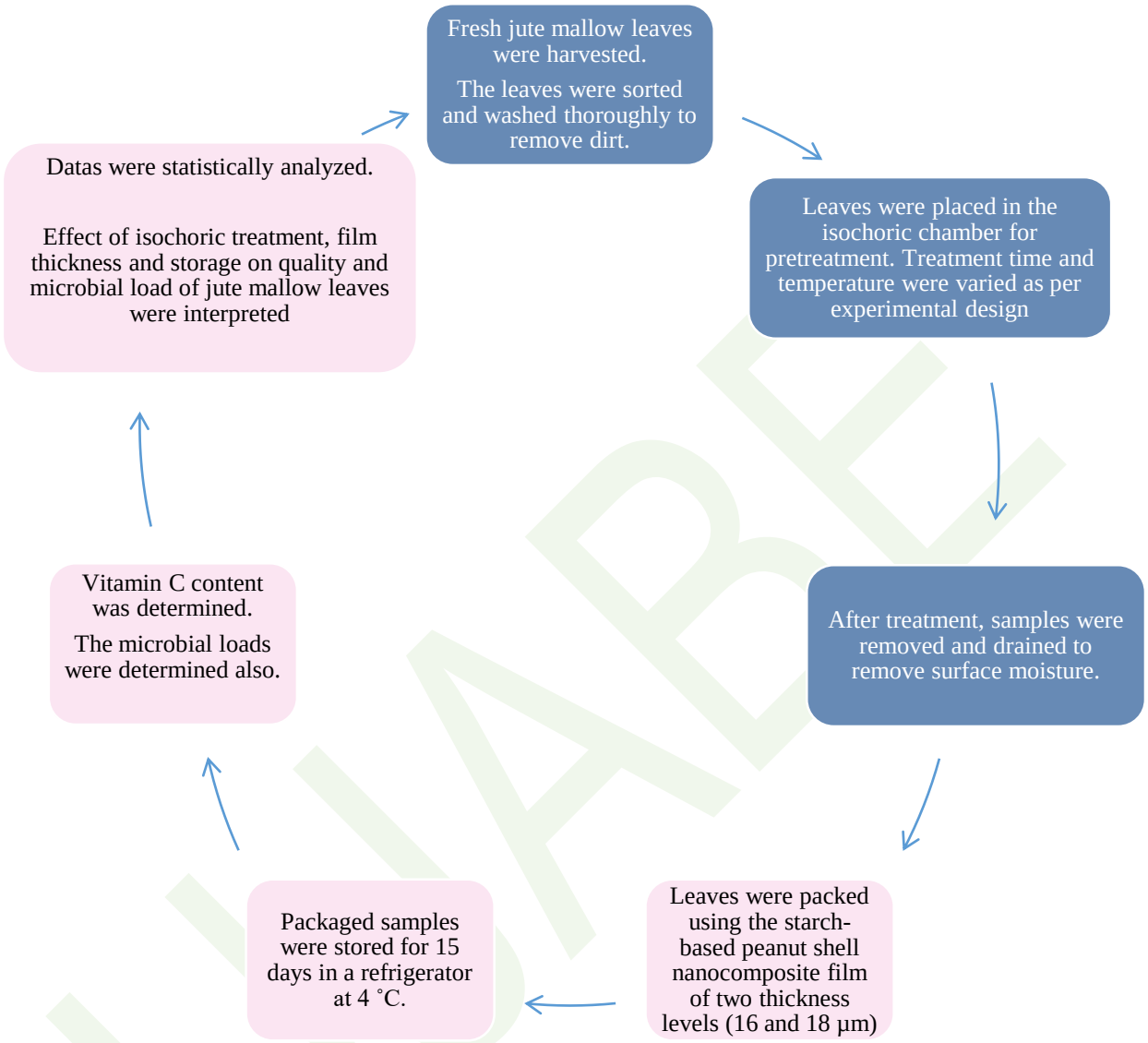

Fig. 1: Cyclic flow diagram showing the connection between isochoric treatment, nanocomposite film packaging, and refrigerated storage.

2.1 Raw Materials

Fresh jute mallow (*Corchorus olitorius*) leaves were obtained from a local vegetable farm in Ilorin, Kwara State, Nigeria. The leaves were harvested at commercial maturity during the early hours of the day and transported immediately to the Laboratory for further processing. For the experiment, only healthy leaves of comparable maturity, size, and color were chosen. The starch used for this experiment was prepared from a freshly harvested white yam tuber purchased from Oja Oba

market Ilorin, Kwara State. The peanut shells were sourced from a local peanut processing plant in Patigi Local Government Area, Kwara State, Nigeria.

2.2 Samples Preparations

2.2.1 Jute Mallow

The harvested jute mallow leaves were manually sorted to remove dirt and other foreign materials, gently rinsed in distilled water for 1-2 mins to eliminate soil particles and surface contaminants and drained on sterile perforated trays. The rinsing was done carefully to minimize damage and possible nutrient loss. Air drying at room temperature (27 ± 2 °C) for about 30 mins eliminated surface moisture.

2.2.2 Extraction of white yam starch

Starch extraction was carried out following the method described by Fadeyibi et al. (2022) with slight modifications. Four hundred grams of white yam tubers was peeled and soaked in a clean bowl containing water for 24 h after which it was ground into pastes. The ground paste was then sieved using a muslin cloth and the resulting filtrates was left undisturbed for 24 h to allow the starch to settle at the bottom of the bowl. The prepared starch was dried using an air circulated oven dryer (Model- Air flow direction: vertical and horizontal, 2 kW, 50- 250 deg. C, China) for 10 h. The dried starch was subsequently sieved to obtain fine starch particles. The starch was stored in a sealed polyethylene bag for subsequent experiment.

2.2.3 Preparation of peanut shell nanoparticles

The peanut shell was milled using the attrition mill to form a powder of varying particle sizes. The mechanical sieve shaker was used to separate the particles of the powder into various categories of sizes. The particle size of the fine materials was determined using a dispersive light scattering equipment (Zetaziser vr 7.0).

2.2.4 Preparation of the starch-based peanut shell nanocomposite film

Based on previous studies and preliminary investigation (Farhoodi, 2015; Fadeyibi et al., 2023). In order to create the film, 18 g starch, 0.38 g peanut nanoparticles, and 16 g glycerol were combined in 300 ml of distilled water at 70 °C to create a thermoplastic solution. After filling a prepared plastic mould, the solution was dried for 24 h at 60 °C and 75 % relative humidity in an air-circulated oven dryer. Before the packaging experiment, the film was carefully removed from

the mould, its thickness was measured using a plastic micrometer, and it was packed in a polyethylene bag to prevent hydration. Films of two thickness levels (16 and 18 µm) were produced for subsequent packaging studies.

2.2.5 Design and Fabrication of the Isochoric Chamber

The chamber was made of grade 316 stainless steel with an inner diameter of 17 cm, an outer diameter of 23 cm and total volume capacity of 4.5 L. A cylindrical shape pressure chamber was used in the isochoric system. It was closed with a lid almost the same size as the chamber body and connected to a pressure gauge. Constant volume operation was achieved by hermetically sealing the rigid chamber after filling with the thermodynamic medium and sample. Sodium chloride (NaCl) at a concentration of 25 g dissolved in 4 L of distilled water (0.625% w/v) was used. The use of salt solutions as nucleation control agents has been reported in studies on isochoric freezing and cryopreservation (Powell-Palm et al., 2020; Zhao et al., 2022). In order to control the temperature, a thermocool freezer was used. For safety, a rupture disk limited the pressure to 40 MPa.

2.2.6 Isochoric Pretreatment Procedure

The prepared salt solution served as the thermodynamic medium inside the chamber, and the jute mallow samples were placed in the specified food compartment. After that, the chamber was sealed to provide the constant volume state and remove any deliberate gas headspace. To obtain subzero chilling, the sealed compartment was then moved into a 379 L turbo inverter chest freezer (220–240 V, 50 Hz; temperature range −18 to −24 °C). Changes in the chamber's temperature was continuously observed using a laboratory thermometer while it cooled. The samples were removed and packaged for refrigeration after being subjected to predefined isochoric treatment conditions.

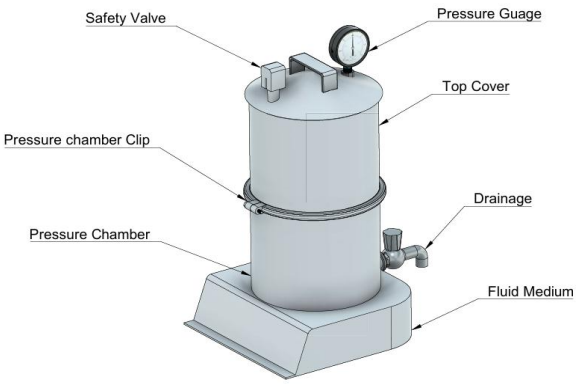

Fig. 2 Fabricated isochoric pretreatment device

2.2.7 Experimental Design

A factorial completely randomized design (CRD) was used for the experiment. The independent variables were: thickness of the packaging film (16 and 18 µm), the isochoric pretreatment state and Vitamin C content and microbial stability parameters were the dependent variables.

Table 1: Experimental treatment combinations of isochoric pretreatment temperature, exposure time, nanocomposite film thickness and refrigerated storage condition

s/n	Temp (˚C)	Thickness (µm)	Time (mins)	Storage Temp (˚C)
1	0	0	0	**0**
2	0	16	5	**4**
3	0	18	5	**4**
4	-2.5	18	5	**4**
5	-2.5	18	10	**4**
6	-2.5	18	15	**4**
7	-2.5	16	5	**4**
8	-2.5	16	10	**4**
9	-2.5	16	15	**4**
10	-5	16	5	**4**
11	-5	16	10	**4**
12	-5	16	15	**4**
13	-5	18	5	**4**
14	-5	18	10	**4**
15	-5	18	15	**4**
16	-7.5	16	5	**4**
17	-7.5	16	10	**4**
18	-7.5	16	`15	**4**
19	-7.5	18	5	**4**
20	-7.5	18	10	**4**
21	-7.5	18	15	**4**

Sample 1 is fresh untreated, unpackaged and unrefrigerated jute mallow leaves as natural control. While, sample 2 received no isochoric pretreatment, packaged with 16 µm nanocomposite film and stored at 4 ± 1 °C for 15 days. Also, sample 3 received no isochoric pretreatment, packaged

with 18 µm nanocomposite film and stored at 4 ± 1 °C for 15 days. However, samples 4–21 received isochoric pretreatment followed by nanocomposite packaging and refrigerated storage.

2.2.8 Packaging and Storage Studies

The produced nanocomposite films were used to package jute mallow leaves after isochoric pretreatment. For fifteen days, packaged samples were kept in a refrigerator at 4 ± 1 °C.

2.2.9 Vitamin C content determination

According to AOAC (2019), the standard 2,6-dichlorophenolindophenol titrimetric method was used to evaluate the vitamin C content of the stored jute mallow leaves.

2.2.10 Microbial Evaluation

The microbial loads were determined using the pour plate methods reported by Fadeyibi et al. (2017). Nutrient Agar was used to culture the bacteria growth in the media. 1 mL of the diluent was poured into sterile Petri dishes and about 10 mL of nutrient agar was carefully added to it. The plate was stirred gradually to solidify and there-after inverted and incubated at 37°C for 24 h. The experiment was duplicated (2 experimental runs per sample) and the average value and standard error of mean were recorded as the microbial loads of the packaged jute mallow leaves.

2.2.11 Statistical Analysis

Analysis of variance (ANOVA) was used to evaluate the experimental data. With two replicate observations for each treatment combination, samples 4–21 were examined using a 3 × 3 × 2 factorial arrangements that included isochoric pretreatment temperature (−2.5, −5, and −7.5 °C), pretreatment time (5, 10, and 15 min), and nanocomposite film thickness (16 and 18 µm). Total viable count (TVC), yeast and mould count (YMC) were assessed in relation to the primary parameters and their two- and three-way interactions. Appropriate post-hoc comparisons were carried out at the 5% significance level where significant effects were found. The mean ± standard error of the mean (SEM) was used to express the results, and $p < 0.05$ was considered significant.

3.0 RESULTS AND DISCUSSION

3.1 Size Range Characteristics of the Peanut Shell Nanoparticles

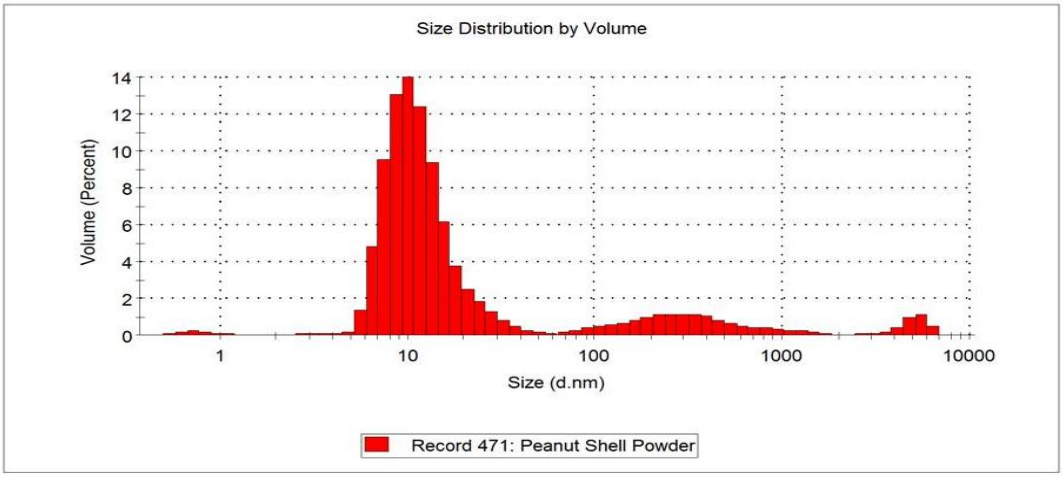

Fig. 3 Size distribution of peanut shell nanoparticles by volume.

The particle size distribution profile of the peanut shell nanoparticles is presented in **Figure 3**. The research verified that the processes of milling and particle separation effectively generated fine particles centered around 12.26 µm with a volume distribution of 82.0% that could be used to reinforce the starch matrix during the manufacturing of nanocomposite films. Also, Minor peaks occur around 379.9 µm and 4986 µm, indicating a multi-modal particle size profile. The distribution profile shows that the peanut shell particles were shrunk to sizes suitable for nanoscale reinforcement, which increased the surface area that could interact with the polymer matrix. The material's capacity to absorb and transfer heat energy within the packaging system is indicated by the molecules' absorption and transmission properties (Hao et al., 2020). The absorbance and particle size of nanoparticles are clearly related, according to Goh et al. (2014), (Mohammadpour and Naghib 2021), and Pesika et al. (2003).

3.2 Performance of the Isochoric Pretreatment Chamber

The results demonstrate that the isochoric pretreatment system efficiently produced a constant-volume thermodynamic environment. As the cooling process continued, some ice formed, which caused the water to expand in volume. This pressure rise shifted the phase balance and prevented total solidification, stabilizing the system in a two-phase (ice-liquid) condition. The pressure gradient discovered in this study confirms the attainment of thermodynamic equilibrium, as studies have shown that isochoric systems reach a stable state where further freezing is prohibited despite

ongoing chilling (Dhanya et al., 2024). The functionality seen in the current work is compatible with the findings of Bilbao-Sainz et al. (2021), who discovered that isochoric systems establish pressure-mediated thermodynamic equilibrium capable of limiting excessive ice formation during low-temperature preservation. Similarly, Dhanya et al. (2024) demonstrated that by avoiding complete freezing and maintaining the ice-liquid equilibrium, pressure generated in constant-volume systems preserves the quality of biological products.

3.3 Effect of Isochoric Pretreatment and Nanocomposite Packaging on Vitamin C Retention

The effect of isochoric pretreatment and nanocomposite packaging on the vitamin C content of jute mallow leaves during refrigerated storage is presented in Table 1 below:

Table 2: Vitamin C content of the jute mallow leaf

Samples	Vitamin C (mg/100 g)
1	0.74 ± 0.10^{f}
2	0.71 ± 0.01^{e}
3	0.67 ± 0.02^{d}
4	0.64 ± 0.01^{c}
5	0.55 ± 0.01^{ab}
6	0.58 ± 0.01^{b}
7	0.63 ± 0.01^{c}
8	0.62 ± 0.01^{c}
9	0.56 ± 0.01^{ab}
10	0.57 ± 0.01^{b}
11	0.55 ± 0.01^{ab}
12	0.51 ± 0.01^{a}
13	0.61 ± 0.01^{c}
14	0.56 ± 0.01^{b}
15	0.53 ± 0.01^{a}
16	0.53 ± 0.01^{a}
17	0.52 ± 0.01^{a}
18	0.46 ± 0.01^{a}
19	0.55 ± 0.02^{ab}
20	0.52 ± 0.01^{a}
21	0.50 ± 0.01^{a}

Values are Mean±SEM.

The relatively substantial amount of vitamin C retention found in this study suggests that the combination of isochoric pretreatment and nanocomposite packaging successfully reduced nutrient breakdown, notwithstanding the observed reduction. There are various ways to explain the preservation effect. Because cellular segmentation is maintained, this maybe, attributed to lower oxygen exposure which, improves vitamin C retention. However, quality gradually

deteriorates as treatment intensity increases, suggesting a trade-off between preservation and processing severity. Previous studies report 40–70% losses in conventionally refrigerated greens after 10–15 days, whereas the present values show higher retention (62.2-75%), indicating the protective effect of isochoric treatment and nanocomposite packaging.

3.4 Effect of Isochoric Pretreatment and Nanocomposite Packaging on Microbial Quality

The influence of isochoric pretreatment and nanocomposite packaging on the microbial quality of jute mallow leaves during refrigerated storage is presented in Table 3 and 4 below

Table 3: Microbial Load of the treated, packaged and stored jute mallow leaf

Samples	Isochoric temperature (°C)	Pretreatment time (min)	Film thickness (µm)	Storage temperature (°C)	TVC (log_{10} cfu/g)	YMC (log_{10} cfu/g)
1	0	0	0	0	5.04 ± 0.02^{a}	2.61 ± 0.01^{a}
2	0	5	16	4	5.22 ± 0.02^{ab}	2.73 ± 0.01^{a}
3	0	5	18	4	5.24 ± 0.02^{ab}	2.83 ± 0.01^{a}
4	-2.5	5	18	4	5.44 ± 0.01^{b}	3.22 ± 0.01^{ab}
5	-2.5	10	18	4	5.56 ± 0.01^{b}	3.32 ± 0.02^{ab}
6	-2.5	15	18	4	5.72 ± 0.01^{c}	3.42 ± 0.01^{b}
7	-2.5	5	16	4	5.31 ± 0.01^{ab}	3.04 ± 0.04^{a}
8	-2.5	10	16	4	5.44 ± 0.01^{b}	3.19 ± 0.01^{ab}
9	-2.5	15	16	4	5.57 ± 0.01^{b}	3.26 ± 0.01^{ab}
10	-5	5	16	4	5.63 ± 0.01^{b}	3.42 ± 0.01^{b}
11	-5	10	16	4	5.81 ± 0.01^{d}	3.53 ± 0.02^{b}
12	-5	15	16	4	6.01 ± 0.01^{e}	3.68 ± 0.02^{c}
13	-5	5	18	4	5.47 ± 0.01^{b}	3.32 ± 0.01^{ab}
14	-5	10	18	4	5.72 ± 0.01^{c}	3.43 ± 0.01^{b}
15	-5	15	18	4	5.85 ± 0.02^{d}	3.57 ± 0.03^{b}
16	-7.5	5	16	4	5.84 ± 0.02^{d}	3.57 ± 0.01^{b}
17	-7.5	10	16	4	6.03 ± 0.03^{e}	3.74 ± 0.01^{c}
18	-7.5	15	16	4	6.34 ± 0.01^{e}	3.93 ± 0.01^{d}
19	-7.5	5	18	4	5.73 ± 0.01^{c}	3.45 ± 0.02^{b}
20	-7.5	10	18	4	5.92 ± 0.02^{e}	3.61 ± 0.01^{b}
21	-7.5	15	18	4	6.14 ± 0.01^{e}	3.73 ± 0.02^{c}

Values are Mean ± SEM. (n = 2). For the factorial analysis, Samples 4 to 21 were analyzed as a 3 × 3 × 2 factorial arrangement comprising isochoric temperature, pretreatment time, and film thickness. Statistical significance was evaluated at $p < 0.05$.

Table 4: TVC and YMC factorial ANOVA (VC factorial ANOVA)

Source	df	F	p-value	Decision
Isochoric temperature	2	2691.50	<0.001	Significant
Pretreatment time	2	1503.26	<0.001	Significant
Film thickness	1	607.51	<0.001	Significant
Temperature × Time	4	36.09	<0.001	Significant
Temperature × Film	2	0.07	0.931	Not significant
Time × Film	2	11.77	<0.001	Significant
Temperature × Time × Film	4	3.24	0.036	Significant
Error	18	—	—	

YMC factorial ANOVA

Source	**df**	**F**	**p-value**	**Decision**
Isochoric temperature	2	1194.51	<0.001	Significant
Pretreatment time	2	439.96	<0.001	Significant
Film thickness	1	352.80	<0.001	Significant
Temperature × Time	4	6.83	0.002	Significant
Temperature × Film	2	4.74	0.022	Significant
Time × Film	2	2.83	0.086	Not significant
Temperature × Time × Film	4	1.30	0.308	Not significant
Error	18	—	—	

The microbiological stability (TVC and YMC) of jute mallow leaves during cold storage is greatly impacted by nanocomposite packaging and isochoric pretreatment, as Tables 3 and 4 demonstrate. Temperature, pretreatment duration, and film thickness all demonstrated significant main impacts on TVC ($p < 0.001$). Temperature × time × thickness and temperature × time both showed significant interactions ($p < 0.05$), however the temperature × thickness interaction was not significant ($p = 0.931$). There were no reported interaction terms for YMC; only the main effects of temperature, time, and film thickness were significant ($p < 0.001$). Temperature × time ($p = 0.002$) and temperature × film thickness ($p = 0.022$) was likewise significant, but the three-way interaction ($p = 0.308$) and time × film thickness ($p = 0.086$) were not. Temperature and pretreatment duration have a major impact on microbial counts; harsher (more severe) conditions result in greater numbers. However, the microbial response is complex and cannot be attributed to any one factor in isolation due to considerable interaction effects among temperature, time, and film thickness; the result depends on the combined amounts of these variables.

Packaging with 18 µm nanocomposite film significantly reduced microbial growth compared to 16 µm, which maybe, due to improved barrier properties that limited oxygen transmission and moisture loss. Increasing isochoric exposure time resulted in higher microbial loads, possibly due

to cellular stress and tissue softening, which enhanced microbial colonization. In similar studies, Fadeyibi et al. (2020) reported a low level of microorganisms on some fruits and vegetables when nanocomposite films were used to package them.

4.0 CONCLUSION

The isochoric device was successfully designed and manufactured. The developed chamber was able to endure pressure with little distortion since it maintained a constant volume system. In order to prevent the production of ice crystals in the plant tissues, the system successfully established a controlled thermodynamic environment in which pressure-temperature interactions-controlled phase transitions. Furthermore, the effects of temperature, exposure duration, film thickness, and cooling on the vitamin C content and microbial stability of jute mallow leaf were clearly established. The results showed that isochoric pretreatment in conjunction with nanocomposite packaging significantly improved vitamin C retention, while microbial loads increased during storage; moderate isochoric conditions were found to best preserve nutritional quality of the leaves, while excessive treatment intensity had a detrimental effect.

ACKNOWLEDGMENT

The authors would like to express their gratitude for all of the help, advice, and helpful criticism they received while conducting the study. We also genuinely recognize the support offered by institutional facilities and a supportive research environment.

Conflicts of Interest

The authors of this work declare that they have no conflicting interests with regard to its publication.

REFERENCES

Ambuko, J., Wanjiru, F., Chemining'wa, G. N., Owino, W. O., & Mwachoni, E. (2017). Preservation of postharvest quality of leafy amaranth (*Amaranthus* spp.) vegetables using evaporative cooling. *Journal of Food Quality*, 2017, Article 5303156. https://doi.org/10.1155/2017/5303156

AOAC. (2019). *Official Methods of Analysis of AOAC International* (21st ed.). Association of Official Analytical Chemists.

Aragie, E., Balié, J., & Morales-Opazo, C. (2018). Does reducing food losses and waste in sub-Saharan Africa make economic sense? *Waste Management & Research*, 36(6), 483–494.

Arienzo, A., Murgia, L., Fraudentali, I., Gallo, V., Angelini, R., & Antonini, G. (2020). Microbiological quality of ready-to-eat leafy green salads during shelf-life and home-refrigeration. *Foods*, 9(10), Article 1421. https://doi.org/10.3390/foods9101421

Bilbao-Sainz, C., Sinrod, A., Powell-Palm, M. J., Dao, L., Takeoka, G., Williams, T., & McHugh, T. (2019). Preservation of sweet cherry by isochoric (constant volume) freezing. *Innovative Food Science & Emerging Technologies*, 52, 108–115. https://doi.org/10.1016/j.ifset.2018.10.016

Bilbao-Sainz, C., Zhao, Y., Takeoka, G., Williams, T., Wood, D., Chiou, B., & ... (2020). Effect of isochoric freezing on quality aspects of minimally processed potatoes. *Journal of Food Science*, 85(8), 2656–2664. https://doi.org/10.1111/1750-3841.15377

Bilbao-Sainz, C., Chiou, B. S., & Sablani, S. (2021). Isochoric freezing of foods: Fundamentals, applications, and energy-saving potential. *Innovative Food Science & Emerging Technologies*, 74, Article 102890.

Dhanya, R., Panoth, A., & Venkatachalapathy, N. (2024). A comprehensive review on isochoric freezing: A recent technology for preservation of food and non-food items. *Sustainable Food Technology*, 2(1), 9. https://doi.org/10.1039/d3fb00146f

Fadeyibi, A., Osunde, Z. D., & Egwim, E. C. (2017). Performance evaluation of cassava starch zinc nanocomposite film for tomatoes packaging. *Journal of Agricultural Engineering*, 48(3), 137–146. https://doi.org/10.4081/jae.2017.565

Fadeyibi, A., Osunde, Z. D., & Yisa, M. G. (2020). Effects of period and temperature on quality and shelf-life of cucumber and garden-eggs packaged using cassava starch–zinc nanocomposite film. *Journal of Applied Packaging Research*, 12(1), Article 3.

Fadeyibi, A., Alabi, K. P., Fadeyibi, M., & Adewara, A. O. (2022). Synthesis, characterization, and suitability of cocoyam starch–banana peels nanocomposite film for locust beans packaging. *Bulletin of the National Research Centre*, 46, Article 190. https://doi.org/10.1186/s42269-022-00882-1

Fadeyibi, A., Alabi, K. P., Fadeyibi, M., & Asaniyi, T. O. (2023). Application of maize starch–peanut shell nanocomposite packaging on mushroom under varying moisture, thickness, and cold storage. *Journal of Microbiology, Biotechnology and Food Sciences*, 13(1), e6071.

FAO. (2011). *Global Food Losses and Food Waste: Extent, Causes and Prevention*. Food and Agriculture Organization. https://www.fao.org/3/i2697e/i2697e.pdf

Farha, W., Abd El-Aty, A. M., Rahman, M. M., Jeong, J. H., Shin, H., Wang, J., Shin, S. S., & Shim, J. (2018). Analytical approach, dissipation pattern and risk assessment of pesticide residue in green leafy vegetables: A comprehensive review. *Biomedical Chromatography*, 32(5), Article e4134. https://doi.org/10.1002/bmc.4134

Farhoodi, M. (2015). Nanocomposite materials for food packaging applications: Characterization and safety evaluation. *Food Engineering Reviews*, 8(1), 35–51. https://doi.org/10.1007/S12393-015-9114-2

Hao, X., Hou, W., Shi, Z., & Fan, C. (2020). Sensitivity study of synthetic polarization measurements in UV wavelength bands. *Proceedings of SPIE*, 19. https://doi.org/10.1117/12.2579307

Kumari, N., Choudhary, S. B., Sharma, H. K., Singh, B. K., & Kumar, A. A. (2019). Health-promoting properties of *Corchorus* leaves: A review. *Journal of Herbal Medicine*, 15, Article 100243. https://doi.org/10.1016/j.hermed.2018.10.005

Mohammadpour, Z., & Naghib, S. M. (2021). Smart nanosensors for intelligent packaging. In *Nanosensors for Smart Manufacturing*. Elsevier. https://doi.org/10.1016/B978-0-12-823358-0.00017-4

Rubinsky, B., Perez, P. A., & Carlson, M. E. (2005). The thermodynamic principles of isochoric cryopreservation. *Cryobiology*, 50, 121–138. https://doi.org/10.1016/j.cryobiol.2004.12.002

Sapna, C., Sharma, P., Pathak, P., Yadav, S. P., & Gautam, S. (2024). Potential of emerging "all-natural" edible coatings to prevent post-harvest losses of vegetables and fruits for sustainable agriculture. *Progress in Organic Coatings*, 193, Article 108537. https://doi.org/10.1016/j.porgcoat.2024.108537

Sarma, U., & Tr, B. (2024). Dietary phytonutrients in common green leafy vegetables and the significant role of processing techniques on spinach: A review. *Food Production, Processing and Nutrition*, 6(1), Article 10. https://doi.org/10.1186/s43014-023-00192-7

Shafiee-Jood, M., & Cai, X. (2016). Reducing food loss and waste to enhance food security and environmental sustainability. *Environmental Science & Technology*, 50(16), 8432–8443. https://doi.org/10.1021/acs.est.6b01993.

To cite this article:
Adeshina Fadeyibi, Aisha Muhammad Ahmad, Opadiran Zainab Omolola and Muhammed Kawata A. 2026. Isochoric Pretreatment and Nanocomposite Packaging Impact On Vitamin C and Microbial Stability of Jute Mallow. 1(4): 99-112. https://journals.unizik.edu.ng/ujabe/