UNIZIK JOURNAL OF AGRICULTURAL AND BIOSYSTEMS ENGINEERING

Journal homepage: https://journals.unizik.edu.ng/ujabe/

UJABE

August (2026), 1(4): 49-63

ISSN:3141-2912

MODELLING THE INFLUENCE OF RICE HUSK-SAWDUST BLEND AND NATURAL BINDER TYPE ON AGRO-WASTE PARTICLEBOARD PROPERTIES

Chinedu C. C. Anyene[1], Nneka J. Ogbuagu[2*], Ogochukwu B. Anyene[3]

[1]Department of Agricultural and Bioenvironmental Engineering, Federal Polytechnic, Oko, Nigeria;

[2]Department of Agricultural and Bioresources Engineering, Nnamdi Azikiwe University, Awka, Nigeria;

[3]St. Lawrence Anglican Church Ndiowu, Anambra State, Nigeria.

**Corresponding Author's E-mail: nj.ogbuagu@unizik.edu.ng*

Received: 6th July 2026; **Accepted:** 18th July 2026; **Available Online:** 31st August 2026

ABSTRACT

The valorisation of agricultural and wood-processing wastes into particleboard presents a sustainable alternative to conventional wood-based panels. This study investigates the main effects and interaction on the base material composition (rice husk, sawdust, and their hybrid blend) and natural binder type (para rubber sap and starch) on the physical properties of particleboard using a 3×2 factorial design (n = 18). Analysis of Variance (ANOVA) revealed that both the base material and binder type had significant effects on particleboard density and mass ($p < 0.01$). The two-way ANOVA showed that both base material ($F = 192.47$, $p < 0.001$) and binder type ($F = 86.34$, $p < 0.001$) significantly influenced particleboard density. A significant interaction effect between base material and binder type was also observed ($F = 8.92$, $p = 0.002$). Among the base materials, rice husk boards exhibited the highest mean density (25.0 ± 4.5 kg/m³), followed by hybrid boards (22.8 ± 4.2 kg/m³), while sawdust boards had the lowest mean density (13.1 ± 1.6 kg/m³). Starch binder increased density by approximately 6.42 kg/m³ compared to para rubber sap. Hybrid boards exhibited optimal dimensional stability (-33.07% to -40.94% thickness change). Multiple regression models demonstrated strong predictive capability for density ($R^2 = 0.93$) and mass ($R^2 = 0.90$). The regression equation $\hat{Y}_{density} = 11.24 + 0.153X_1 + 4.86X_2 + 0.021X_1X_2$ confirmed rice husk proportion as the dominant densification contributor, with starch contributing an additional 4.86 kg/m³. This interaction is attributed to enhanced capillary penetration of starch into porous rice husk surfaces. These findings provide a validated quantitative framework for predictive design of sustainable particleboards from locally available agro-waste, addressing deforestation and waste disposal challenges while supporting circular economy objectives.

Keywords: Particleboard, rice husk, sawdust, natural binders, statistical analysis, sustainable composites.

1.0 INTRODUCTION

The escalating global demand for environmentally responsible construction materials has intensified efforts to replace conventional wood-based panels with sustainable alternatives derived from renewable resources (Dukarska *et al.*, 2025). Among these alternatives, particleboard produced from agricultural residues has attracted growing attention due to its potential to simultaneously reduce deforestation pressures and address persistent agro-industrial waste disposal challenges (Blasi *et al.*, 2023; Pandey *et al.*, 2025). At the same time, heightened awareness of indoor air quality has raised serious concerns regarding synthetic, formaldehyde-based adhesives, prompting a shift toward safer, bio-derived bonding systems (Goncalves *et al.*, 2024; Calvez *et al.*, 2024). Natural binders sourced from plant- and latex-based materials offer a promising route toward non-toxic, biodegradable particleboards (Islam *et al.*, 2021), but their performance remains strongly dependent on formulation and processing variables. Despite extensive experimental investigations into agro-waste-based composites, much of the existing

literature relies on descriptive comparisons or single-factor experimental strategies that inadequately capture the interactive effects between material constituents and binder systems (Baharuddin *et al.*, 2023; Mirindi, 2024). Particle geometry, including size distribution, aspect ratio, and surface roughness, governs packing efficiency and stress transfer within the board structure (Engehausen *et al.*, 2024; Monfared *et al.*, 2025; Ulusoy, 2023), while the chemical composition of the lignocellulosic furnish dictates surface energy and adhesive compatibility (Gurau *et al.*, 2020; Leontijevic *et al.*, 2024; Yang *et al.*, 2019). Adhesive-related factors, including binder type and concentration, further determine bond quality and continuity (Pędzik *et al.*, 2022; Wan Abd Rahman *et al.*, 2019), while pressing parameters control mat densification and curing kinetics (Silva *et al.*, 2024; Shalbafan and Thoemen, 2022). Board density, widely recognized as a primary governing variable, exhibits strong relationships with mechanical strength, dimensional stability, and machinability (Cabral *et al.*, 2022; Żabowski *et al.*, 2024), with international standards such as ANSI A208.1 and EN 312 classifying particleboards primarily according to density categories (Hannuowood, 2022). The limited application of statistically robust modelling frameworks that capture these interactive effects remains a significant challenge to industrial-scale optimization and quality assurance for bio-based particleboards.

Nigeria, as one of West Africa's major agricultural producers, presents a compelling context for sustainable particleboard development (Okeke *et al.*, 2024). Rice cultivation generates substantial quantities of rice husk, a silica-rich residue commonly disposed of through open burning (Kordi *et al.*, 2024; Satbaev *et al.*, 2021; Taiye *et al.*, 2024), while the timber-processing sector produces large volumes of sawdust that often accumulate as unmanaged waste (Owoyemi *et al.*, 2016; Udokpoh and Nnaji, 2023). The local availability of renewable binders such as cassava starch and para rubber (*Hevea brasiliensis*) latex creates an opportunity to fabricate fully bio-based particleboards (Islam *et al.*, 2021; Oladele and Okoro, 2015). Rice husk, containing approximately 20% silica, imparts enhanced surface hardness and fire resistance (Hamidu *et al.*, 2025; Tyagi *et al.*, 2017), while sawdust possesses a fibrous morphology that facilitates mechanical interlocking and improved adhesive bonding (Sikhosana *et al.*, 2025). Hybrid formulations combining these residues have gained increasing attention for their ability to exploit complementary characteristics, resulting in improved particle packing and balanced physical performance (Kariuki *et al.*, 2020). Starch-based binders function through gelatinization to produce rigid adhesive matrices (Wang *et al.*, 2018; Bao and Bergman, 2018), though their hydrophilicity and brittleness present limitations (Yang *et al.*, 2024), whereas natural rubber latex forms flexible films that impart superior toughness (Thavaseelan *et al.*, 2022) despite thermal softening at elevated temperatures (Kaiser *et al.*, 2021). Statistical design and analysis tools have become indispensable in composite materials research (Aristizábal-Alzate *et al.*, 2024; Chen and Chen, 2025), with Analysis of Variance (ANOVA) partitioning experimental variability to determine factor significance (Moore *et al.*, 2023), and regression-based modelling translating experimental data into predictive relationships (Bhattacharya *et al.*, 2021). However, the systematic application of these methodologies to agro-waste particleboards bonded solely with natural adhesives remains underdeveloped (Júnior *et al.*, 2018; Martin *et al.*, 2017; Mirindi *et al.*, 2025). Hydraulic pressing systems, operating on Pascal's

principle, provide a practical solution for particleboard manufacturing in resource-constrained settings (Balangao *et al.*, 2022; Yanglipress, 2025), with recent technological developments improving repeatability and quality consistency (Gupta *et al.*, 2022).

Therefore, this study adopts a statistically driven experimental framework integrating factorial design, ANOVA, and regression modelling to systematically evaluate the combined influence of base material composition (rice husk, sawdust, and their hybrid blend) and natural binder type (starch and para rubber sap) on the physical properties of particleboard. Specifically, the study aims to determine the statistical significance of main effects and interactions, develop validated regression models for property prediction, and identify application-oriented formulations using locally available, sustainable resources.

2.0 Materials and methods

2.1 Experimental design

A 3×2 full factorial experimental design was adopted to evaluate the main effect and the interactions of material formulation on particleboard physical properties. The first factor, base material composition, was investigated at three levels: rice husk (RH), sawdust (SD), and a 50:50 hybrid blend (H), enabling comparison between single-residue and blended systems. The second factor, binder type, was examined at two levels: para rubber sap (PRS) and starch (ST), selected for their local availability, renewable origin, and contrasting bonding mechanisms (elastic film formation versus rigid gelatinized matrix). The factorial combination produced six treatment conditions, each replicated three times, yielding 18 specimens (n = 18). Response variables included density (kg/m³), mass (kg), and dimensional change (%), providing a robust framework for ANOVA and regression modelling to quantify main effects, interactions, and predictive relationships.

2.2 Materials and processing

Figure 1 outlines the sequential manufacturing workflow for the composite material, detailing the stages from raw material preparation through forming, bonding, and final surface finishing, all governed by integrated process monitoring and control.

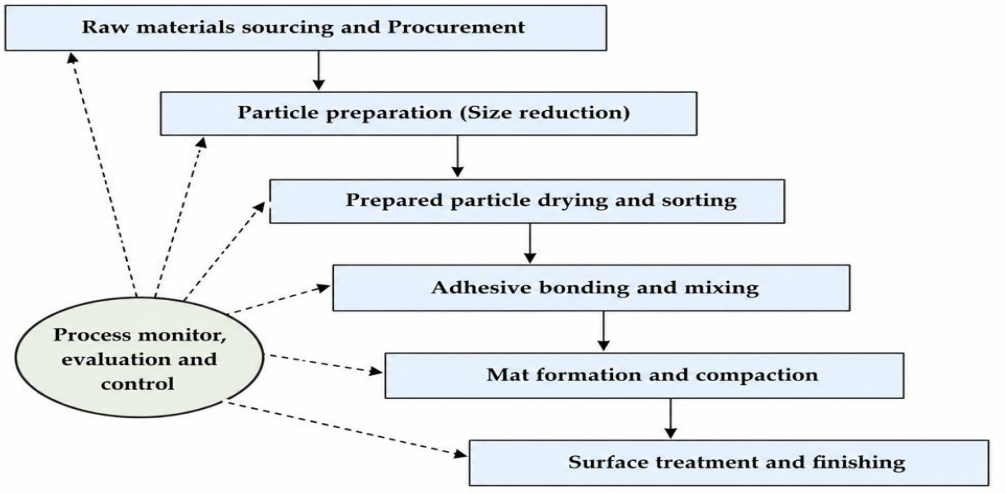

Figure 1: Flowchart of particleboard production processes.

2.2.1 Sample preparation

Rice husk and sawdust were sourced from JOSAN rice farm and mills and Ekwulobia timber-processing shop in Anambra State (6°20′ N 7°00′ E), cleaned to remove extraneous matter, and sun-dried to below 10% moisture content. The dried materials were mechanically milled and sieved to a particle size range of 0.5–1.0 mm. Two natural binders were employed: para rubber sap (PRS) and starch (ST). Fresh PRS was collected from *Hevea brasiliensis* trees, filtered to remove impurities, and diluted with water at a ratio of 3:15 (sap: water). Starch binder was prepared by dispersing 100 g of locally produced cassava starch powder in 15 L of water and heating the mixture to **75 ± 5 °C** with continuous stirring until gelatinization was complete and a viscous adhesive paste was formed. Both binders were prepared fresh to prevent degradation.

2.2.2 Board production

Particleboard fabrication employed a locally fabricated hydraulic compaction press (1-tonne capacity, Figure 2). For each batch, 5 kg of dried particles were manually blended with binder, hand-formed into a rectangular mat within a steel mold, and compacted from 51 mm to 25.4 mm thickness. Boards were removed, sun-dried for 96 hours, and conditioned prior to physical property evaluation.

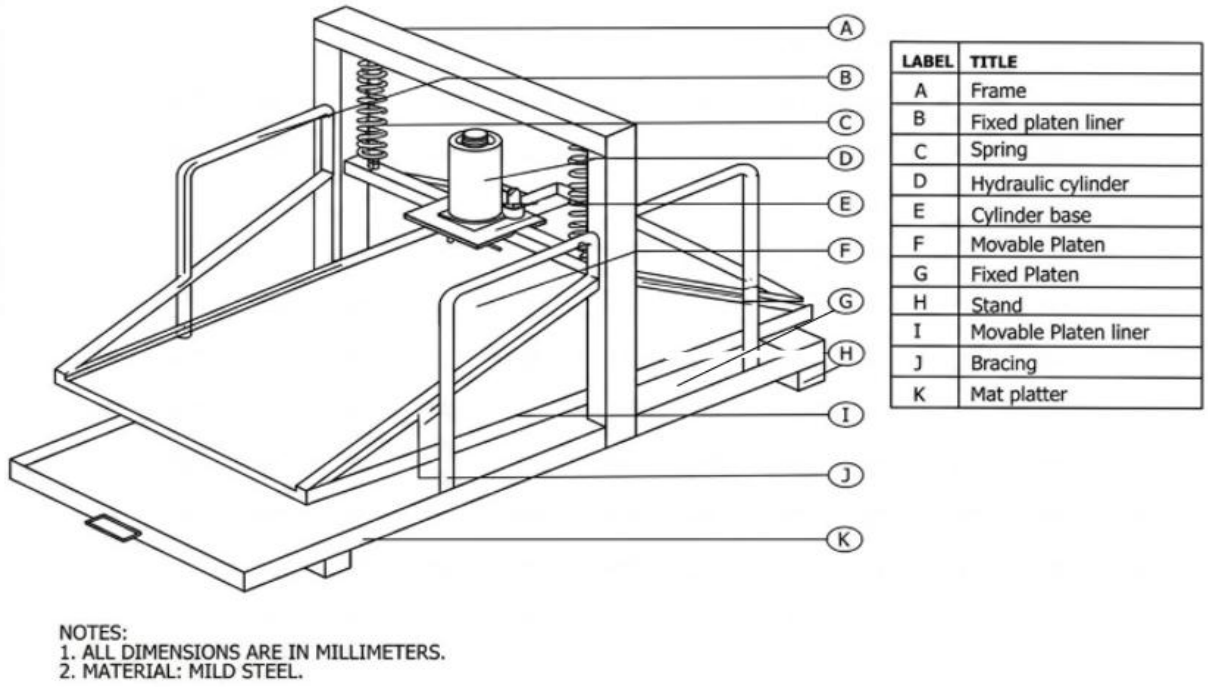

LABEL	TITLE
A	Frame
B	Fixed platen liner
C	Spring
D	Hydraulic cylinder
E	Cylinder base
F	Movable Platen
G	Fixed Platen
H	Stand
I	Movable Platen liner
J	Bracing
K	Mat platter

Figure 2: Assembly drawing of manual hydraulic particleboard compaction machine.

2.3 Measurements and data collection

For each fabricated particleboard specimen, a comprehensive set of **physical property measurements** was conducted to assess density, mass, dimensional stability, and surface quality. Measurements were performed under controlled laboratory conditions at room temperature (25 ± 2°C) and relative humidity (50 ± 5%) to minimize environmental variability.

2.3.1 Dimensional measurements

Board length, width, and thickness were measured at five points using digital callipers (0.01 mm precision), with thickness additionally recorded at corners and centre to capture compaction variability. Mean values were used for volume and density calculations, while dimensional stability was determined by comparing initial and post-conditioning dimensions.

2.3.2 Mass determination

The mass of each particleboard was determined using a **digital analytical balance with 0.01 g precision**. Boards were weighed after conditioning to equilibrium moisture content to ensure consistency across specimens. Three consecutive readings were taken for each board, and the average value was recorded to reduce measurement error.

2.3.3 Determination of the density of particleboard

Board density (ρ) was computed using the standard formula:

$$\rho = \frac{Mass\ (kg)}{Volume\ (m^3)} = \frac{Mass}{L \times W \times \mathrm{T}} \quad \ldots\ldots\ldots\ldots\ldots\ldots\ldots\ldots (1)$$

Where, L, W, and T are the mean values of the respective dimensions in meters.
This approach allowed for precise determination of compaction efficiency and comparison across different material and binder treatments.

2.3.4 Dimensional change assessment

Dimensional change, particularly thickness swelling or shrinkage, was calculated as a percentage using the formula:

$$\text{Dimensional change (\%)} = \frac{Final\ dimension - Initial\ Dimension}{Initial\ dimension} \times 100 \quad \ldots\ldots\ldots\ldots\ldots\ldots\ldots\ldots (2)$$

This parameter provided quantitative insight into the board's stability under drying conditions, capturing both expansion and contraction behaviour associated with the base material and binder type.

2.3.5 Visual inspection of defects

Boards were visually and tactilely inspected for surface and internal defects (cracks, warping, delamination, uneven compaction), with observations recorded qualitatively by severity (minor, moderate, severe) to assess usability and quality. These assessments collectively generated a comprehensive dataset for statistical evaluation and predictive modelling of particleboard properties.

2.4 Statistical analysis

All experimental data were analysed using R statistical software (version 4.2.1). Descriptive statistics (means, standard deviations, coefficients of variation) were calculated for response variables (density, mass, dimensional change), with boxplots and error bars generated to visualize treatment differences. Two-way ANOVA was performed to evaluate the main effects of base material composition and binder type, as well as their interaction, on density and mass at $\alpha = 0.05$. Tukey's HSD post-hoc test was employed for pairwise comparisons where ANOVA indicated significant differences. Simple and multiple linear regression models were developed to predict

board properties from material variables, with model performance evaluated using R^2, adjusted R^2, residual plots, and diagnostic statistics. ANOVA assumptions were verified using Shapiro-Wilk tests (normality), Levene's tests (homogeneity of variance), residual plots (linearity and homoscedasticity), and Durbin-Watson statistics (autocorrelation). This comprehensive approach enabled robust identification of significant factors and reliable predictive modelling for formulation optimization.

3.0 Results and Discussion

3.1 Descriptive statistics

The mean values and standard deviations for key physical properties across treatments were presented in Table 1. Clear patterns emerge: RH-based boards show highest density, SD-based lowest, with hybrid intermediate. Starch-bound boards consistently exhibit higher density than sap-bound counterparts.

Table 1: Mean physical properties of particleboard treatments (n=3 per treatment).

Source	DF	Sum Square	Mean Square	F-value	p-value
Base Material	2	420.15	210.08	192.47	<0.001***
Binder Type	1	188.92	188.92	86.34	<0.001***
Interaction	2	19.48	9.74	8.92	0.002**
Residuals	12	13.10	1.09		

Note: RH = Rice Husk, SD = Sawdust, PRS = Para Rubber Sap, ST = Starch, H = Hybrid

3.2 Analysis of variance

3.2.1 Density analysis

Two-way ANOVA for density (Table 2) revealed highly significant main effects for both base material ($F=192.47$, $p<0.001$) and binder type ($F=86.34$, $p<0.001$), with a significant interaction ($F=8.92$, $p=0.002$).

Table 2: Two-way ANOVA for particleboard density.

Source	DF	Sum square	Mean square	F-value	p-value
Base Material	2	420.15	210.08	192.47	<0.001***
Binder Type	1	188.92	188.92	86.34	<0.001***
Interaction	2	19.48	9.74	8.92	0.002**
Residuals	12	13.10	1.09		

***p<0.001, **$p<0.01$

The significant interaction indicates that the effect of binder type depends on base material composition. Post-hoc Tukey tests (Table 3) show all base material levels differ significantly ($p<0.01$), and starch produces significantly higher density than para rubber sap across all base materials.

Table 3: Tukey HSD multiple comparisons for density.

Comparison	Mean Difference	p-value	Significance
RH vs. SD	11.98 kg/m³	<0.001	***
RH vs. H	2.33 kg/m³	0.042	*
SD vs. H	-9.65 kg/m³	<0.001	***
ST vs. PRS	6.42 kg/m³	<0.001	***

***p<0.001, * $p<0.05$

3.2.2 Mass analysis

ANOVA for mass shows similar patterns (Table 4) with highly significant main effects for base material ($F=178.23$, $p<0.001$) and binder type ($F = 72.86$, $p<0.001$), and significant interaction ($F = 7.45$, $p=0.004$).

Table 4: Two-way ANOVA for particleboard mass.

Source	DF	Sum square	Mean square	F-value	p-value
Base Material	2	6.12	3.06	178.23	<0.001***
Binder Type	1	2.51	2.51	72.86	<0.001***
Interaction	2	0.26	0.13	7.45	0.004**
Residuals	12	0.21	0.0175		

***p < 0.001, **$p < 0.01$

3.3 Effect of material composition and predictive modelling

3.3.1 Effect of rice husk proportion on particleboard density

Particleboard density increased with increasing rice husk proportion (Table 5). The mean density increased from 13.1 ± 1.6 kg m^{-3} for boards without rice husk to 22.8 ± 4.2 kg m^{-3} and 25.0 ± 4.5 kg m^{-3} for boards containing 50% and 100% rice husk, respectively. The observed increase is attributed to the relatively high silica content and rigidity of rice husk particles, which improve particle packing and board compaction during hot pressing. One-way analysis of variance (ANOVA) showed that rice husk proportion significantly influenced particleboard density ($p < 0.05$). Where significant differences occurred, treatment means were separated using Tukey's Honestly Significant Difference (HSD) test.

Table 5: Effect of rice husk proportion on particleboard density.

Rice husk proportion (%)	Particleboard density (kg m^{-3})
0	13.1 ± 1.6
50	22.8 ± 4.2
100	25.0 ± 4.5

Values are presented as mean ± standard deviation (n = 2). Statistical groupings should only be included where supported by Tukey's HSD test ($p < 0.05$).

3.3.2 Multiple regression models for predicting board properties

To quantify the combined effects of rice husk proportion and binder type on particleboard properties, multiple linear regression models were developed.

i. Model for predicting density from material variables

$$\hat{Y}_{density} = 11.24 + 0.153X_1 + 4.86X_2 + 0.021X_1X_2 \quad \ldots\ldots\ldots\ldots\ldots\ldots\ldots\ldots \quad (3)$$

Where: X_1 = Rice husk proportion (0 - 100%), X_2 = Binder type (0 = PRS, 1 = ST), and X_1X_2 = Interaction between rice husk proportion and binder type.

The regression model adequately described particleboard density with a coefficient of determination of $R^2 = 0.93$ (Adjusted $R^2 = 0.91$; $p < 0.001$), indicating that 93% of the observed variation was explained by the predictor variables. The significant interaction term demonstrates that the influence of rice husk proportion on density depended on binder type.

ii. Model for predicting mass from material variables

$$\hat{Y}_{mass} = 1.18 + 0.018X_1 + 0.42X_2 + 0.002X_1X_2 \quad \ldots\ldots\ldots\ldots\ldots\ldots \quad (4)$$

Similarly, the mass prediction model exhibited strong predictive performance ($R^2 = 0.90$, Adjusted $R^2 = 0.88$; $p < 0.001$), with all regression coefficients remaining statistically significant ($p < 0.01$).

3.3.3 Model adequacy and validation

The adequacy of the developed regression models was assessed using standard diagnostic statistics. Residual plots showed random dispersion around zero without discernible patterns, indicating homoscedasticity. Standardized residuals were within ±3, confirming the absence of influential outliers. Normality of residuals was verified using the Shapiro–Wilk test (density: $p = 0.42$; mass: $p = 0.38$) and corresponding Q–Q plots. Durbin–Watson statistics of 1.87 (density) and 1.92 (mass) indicated independence of residuals, while variance inflation factors (VIF < 2.0) confirmed negligible multicollinearity among predictor variables. Overall, the high coefficients of determination (density: $R^2 = 0.93$; mass: $R^2 = 0.90$) and satisfactory diagnostic statistics demonstrate that the developed models are statistically adequate and suitable for predicting particleboard density and mass within the investigated experimental domain.

3.4 Discussion of findings

This study establishes a quantitative, design-driven framework linking agro-waste composition and binder chemistry to the physical properties of particleboards. The results advance beyond confirming established trends by isolating critical interaction effects and delivering statistically robust predictive models for forward engineering. The highly significant main effects ($p < 0.001$) of base material and binder type reaffirm the foundational roles of particle morphology and adhesive matrix formation (Cheaburu-Yilmaz *et al.*, 2022; Jarzabek *et al.*, 2016). The notable finding, however, is the significant interaction ($p < 0.01$) between these factors, demonstrating their interdependent influence. The density-enhancing effect of starch binder was markedly more pronounced in rice husk (RH) boards than in those made from sawdust (SD). This is mechanistically attributable to interfacial specificity: the porous, silica-rich surface of RH promotes superior capillary penetration and mechanical anchoring of the gelatinizing starch, forming a dense, co-continuous composite. In contrast, the smoother, less receptive surface of SD results in more superficial bonding, limiting starch's effectiveness as a void-filling agent. This finding provides quantitative evidence supporting the established principle that particle surface chemistry plays a critical role in determining natural adhesive effectiveness, a concept also reported by Anaç & Doğan (2023) and Akpinar *et al.* (2025).

The performance of hybrid (50:50 RH:SD) boards exemplifies engineered synergy through particle packing optimization. As noted by Baharuddin *et al.* (2023) and Bekhta *et al.* (2025), blending morphologically distinct particles creates a more efficient microstructure. Here, granular RH particles fill the interstices within the fibrous SD network, yielding a panel with statistically distinct, intermediate density and enhanced dimensional stability. This outcome transcends a simple linear average, demonstrating that hybridization is a viable strategy to mitigate the intrinsic

brittleness of pure RH boards and the low compactness of pure SD boards, aligning with observations by Ahn *et al.* (2016), Shah *et al.* (2016), Olupot *et al.* (2022) and Oluwale *et al* (2020).

A key contribution of this work is its predictive design framework. While factorial design and regression are established tools (Montgomery, 2017), their application here yields precise, formulation-specific equations. For example, the model enables the deterministic design of a board with a targeted density by specifying the required rice husk proportion and binder type. This transforms qualitative insights from prior studies into a quantitative design algorithm, substantially reducing development cycles reliant on iterative experimentation. The regression analysis provides a quantified trade-off between natural binder systems. The model coefficients numerically confirm the established contrast: starch forms rigid, dense matrices (Daz *et al.*, 2022; Montzari *et al.*, 2010), while natural rubber latex yields flexible, lower-density networks (Omar *et al.*, 2025; Wei *et al.*, 2017). Specifically, the starch binder coefficient adds approximately 4.86 kg/m³ to density, quantifying its role as a rigid, space-filling gel. This explicit quantification elevates binder selection from a qualitative choice to an evidence-based decision for tailoring properties toward stiffness or impact resistance (Bumanis *et al.*, 2022; Rimkienė *et al.*, 2023).

This research demonstrates that the properties of sustainable particleboards can be programmed through informed control of interfacial chemistry and composite microstructure. By integrating rigorous statistical modelling with mechanistic interpretation, the study delivers a validated framework that bridges fundamental materials science with practical manufacturing. This approach provides a robust pathway for the systematic development and reliable production of fully bio-based composites within a circular economy.

4.0 Conclusion

This study demonstrates that the physical properties of agro-waste particleboards can be systematically influenced through statistical control of base material composition and natural binder selection. Factorial ANOVA confirmed that both factors significantly affect density and mass, with a notable interaction driven by interfacial compatibility between particles and binders. Rice husk boards exhibited the highest density (25.0 ± 4.5 kg/m³), while hybrid boards achieved balanced performance (22.8 ± 4.2 kg/m³) with superior dimensional stability (-33.07% to -40.94%). Regression models ($R^2 > 0.90$) confirmed that rice husk proportion is the dominant densification contributor, with starch binder adding 4.86 kg/m³ compared to para rubber sap. While starch promotes higher density through rigid matrix formation, it introduces brittleness, whereas para rubber sap yields lighter, more flexible panels. These findings provide a quantitatively supported, data-driven framework for predictive particleboard design from locally available agro-waste resources. Future studies should evaluate mechanical properties and processing parameters to facilitate industrial-scale adoption of these sustainable bio-based composites.

REFERENCES

Bhattacharya, S., K. Kalita, R. Čep, and S. Chakraborty. (2021). A comparative analysis on prediction performance of regression models during machining of composite materials. *Materials*, Vol. 14(21):6689.

Blasi, A., A. Verardi, C.G. Lopresto, S. Siciliano, and P. Sangiorgio. (2023). Lignocellulosic agricultural waste valorization to obtain valuable products: An overview. *Recycling*, Vol. 8(4):61.

Borges, C.S.P., A. Akhavan-Safar, P. Tsokanas, R.J.C. Carbas, E.A.S. Marques, and L.F.M. da Silva. (2023). From fundamental concepts to recent developments in the adhesive bonding technology: A general view. *Discover Mechanical Engineering*, Vol. 2:8.

Bumanis, G., L. Vitola, I. Pundiene, M. Sinka, and D. Bajare. (2020). Gypsum, geopolymers, and starch—alternative binders for bio-based building materials: A review and life-cycle assessment. *Sustainability*, Vol. 12(14):5666.

Cabral, J.P., B. Kafle, M. Subhani, J. Reiner, and M. Ashraf. (2022). Densification of timber: A review on the process, material properties, and application. *Journal of Wood Science*, Vol. 68:20.

Calvez, I., R. Garcia, A. Koubaa, V. Landry, and A. Cloutier. (2024). Recent advances in bio-based adhesives and formaldehyde-free technologies for wood-based panel manufacturing. *Current Forestry Reports*, Vol. 10:386-400.

Cheaburu-Yilmaz, C.N., C.K. Ozkan, and O. Yilmaz. (2022). Synthesis and application of reactive acrylic latexes: Effect of particle morphology. *Polymers*, Vol. 14(11):2187.

Chen, H.-Y., and C. Chen. (2025). A study of the response surface methodology model with regression analysis in three fields of engineering. *Applied System Innovation*, Vol. 8(4):99.

Daniyan, I., K. Mpofu, B. Oladapo, and R. Ajetomobi. (2023). Modelling and simulation of automated hydraulic press brake. In *Flexible Automation and Intelligent Manufacturing: The Human-Data-Technology Nexus*, eds. K.Y. Kim, L. Monplaisir, and J. Rickli, 71-78. Springer.

Das, M., N. Rajan, P. Biswas, and R. Banerjee. (2022). A novel approach for resistant starch production from green banana flour using amylopullulanase. *LWT – Food Science and Technology*, Vol. 153:112391.

Dukarska, D., J. Kawalerczyk, J. Sedliačik, P. Antov, and M. Unisa. (2025). Alternative wood raw material sources in particleboard and OSB production—challenges and perspectives. *Polymers*, Vol. 17(13):1760.

Engehausen, N., J.T. Benthien, and J. Lüdtke. (2024). Influence of particle size on the mechanical properties of single-layer particleboards. *Fibers*, Vol. 12(4):32.

Goncalves, S., S. Curling, G. Ormondroyd, N. Paiva, J. Martins, F. Magalhaes, and L. Carvalho. (2024). Volatile organic compound (VOC) emissions from no-added-formaldehyde lignosulphonate/pMDI particleboards and their effect on indoor air quality. *Wood Material Science & Engineering*.

Gurau, L., J.T. Benthien, M. Ohlmeyer, and N. Ayrilmis. (2020). Effect of particleboard density and core layer particle thickness on surface roughness. *European Journal of Wood and Wood Products*, Vol. 78(6):1291-1302.

Hamidu, I., B. Afotey, B. Kwakye-Awuah, and D.A. Anang. (2025). Synthesis of silica and silicon from rice husk feedstock: A review. *Heliyon*, Vol. 11(4):e42491.

Hannuowood. (2022, July 16). *Classification of particle board*. Online at: https://www.hannuowood.com/news/classification-of-particle-board-60019992.html. Accessed on: 4 January 2026.

Ikubanni, P.P., A.A. Adeleke, T.A. Adekanye, O.J. Aladegboye, O.O. Agboola, and B.T. Ogunsemi. (2025). Particleboard from biomass wastes: A review of production techniques, properties, and future trends. *Research on Engineering Structures and Materials*, Vol. 11(2):713-740.

Islam, M.N., A. Adib, N.H. Dana, A.K. Das, M.O. Faruk, M.R.H. Siddique, D.A. Agar, S.H. Larsson, M. Rudolfsson, M. Ashaduzzaman, and M.I. Shams. (2021). Raw natural rubber latex-based bio-adhesive for the production of particleboard: Formulation and optimization of process parameters. *RSC Advances*, Vol. 11(45):28542-28549.

Jarzabek, D.M., M. Chmielewski, J. Dulnik, and A. Strojny-Nedza. (2016). The influence of the particle size on the adhesion between ceramic particles and metal matrix in MMC composites. *Journal of Materials Engineering and Performance*, Vol. 25:3139-3145.

Jefferson, A.J., and H.N. Dhakal. (2022). Sustainable biobased composites for advanced applications: Recent trends and future opportunities – A critical review. *Composites Part C: Open Access*, Vol. 7:100220.

Júnior, A.M.G., V.V.R. Silva, L.M.R. Baccarini, and L.F.S. Mendes. (2018). The design of multiple linear regression models using a genetic algorithm to diagnose initial short-circuit faults in 3-phase induction motors. *Applied Soft Computing*, Vol. 63:50-58.

Kaiser, S., R. Rabbani, R. Ahmed, and S. Kaiser. (2021). Temperature dependent mechanical properties of natural and synthetic rubber in practical structures. *Acta Mechanica Slovaca*, Vol. 25(3):6-14.

Kariuki, S.W., J. Wachira, M. Kawira, and G. Murithi. (2020). Crop residues used as lignocellulose materials for particleboards formulation. *Heliyon*, Vol. 6(9):e05025.

Kordi, M., N. Farrokhi, M.I. Pech-Canul, and A. Ahmadikhah. (2024). Rice husk at a glance: From agro-industrial to modern applications. *Rice Science*, Vol. 31(1):14-32.

Kumar, A. (2023). Utilization of agricultural waste into useful materials. *Global Scientific Journal*, Vol. 11(9):196-218.

Lee, S.H., W.C. Lum, J.G. Boon, L. Kristak, P. Antov, M. Pedzik, T. Rogozinski, H.R. Taghiyari, M.A.R. Lubis, W. Fatriasari, S.M. Yadav, A. Chotikhun, and A. Pizzi. (2022). Particleboard from agricultural biomass and recycled wood waste: A review. *Journal of Materials Research and Technology*, Vol. 20:4630-4658.

Leontijevic, V., T. Fechter, D. Cantero, P. Jaeger, and M.J. Cocero. (2024). Surface wettability of lignin materials from supercritical water hydrolysis of wood. *Chemical Engineering Journal*, Vol. 481:148449.

Mantzari, G., S.N. Raphaelides, and S. Exarhopoulos. (2010). Effect of sorbitol addition on the physicochemical characteristics of starch–fatty acid systems. *Carbohydrate Polymers*, Vol. 79(1):154-163.

Martin, J., D.D. Ruiz de Adana, and A.G. Asuero. (2017). Fitting models to data: Residual analysis, a primer. In *Uncertainty Quantification and Model Calibration*, ed. J.P. Hessling. IntechOpen.

Mirindi, D. (2024). A review of particleboard development and performance using non-toxic and biodegradable adhesives. *International Journal of Engineering Trends and Technology*, Vol. 72(5):252-260.

Mirindi, D., D. Sinkhonde, T. Bezabih, F. Yazdandoust, J. Hunter, P. Mirindi, and F. Mirindi. (2025). Predictive modeling of particleboard properties derived from agricultural waste biomass using machine learning algorithms. *Next Research*, Vol. 2(4):101045.

Mohamad, F.O., M.F., F. Ali, M.S. Jami, A.S. Azmi, F. Ahmad, M.Z. Marzuki, S.K. Muniyandi, Z. Zainudin, and M.P. Kim. (2025). A comprehensive review of natural rubber composites: Properties, compounding aspects, and renewable practices with natural fibre reinforcement. *Journal of Renewable Materials*, Vol. 13(3):497-538.

Monfared, Z.G., J.G.I. Hellström, and K. Umeki. (2025). Effect of particle irregularity and particle size distribution on the morphology of packed beds of biochar particles. *Scientific Reports*, Vol. 15(1):15086.

Montgomery, D.C. (2017). *Design and Analysis of Experiments*. 9th ed. New York: Wiley.

Moore, K., R. Mowers, M.L. Harbur, L. Merrick, A.A. Mahama, and W. Suza. (2023). The analysis of variance (ANOVA). In *Quantitative Methods*, eds. W.P. Suza and K.R. Lamkey. Iowa State University Digital Press.

Ndirika, V.I.O., and A.P. Onwualu. (2019). *Design principles for post-harvest machines*. First Edition. Nsukka: University of Nigeria Press Ltd.

Okeke, F.O., A. Ahmed, A. Imam, and H. Hassanin. (2024). Study on agricultural waste utilization in sustainable particleboard production. *E3S Web of Conferences*, Vol. 563:02007.

Oladele, I.O., and M.A. Okoro. (2015). Effects of cassava starch and natural rubber as binders on the flexural and water absorption properties of recycled paper pulp based composites. *International Journal of Engineering and Technology Innovation*, Vol. 5(4):255-263.

Olupot, P.W., E. Menya, F. Lubwama, L. Ssekaluvu, B. Nabuuma, and J. Wakatuntu. (2022). Effects of sawdust and adhesive type on the properties of rice husk particleboards. *Results in Engineering*, Vol. 16:100775.

Oluwale, O., B.A. Akinyemi, and F. Attabo. (2020). Optimization of the mixing ratio for particleboard production from groundnut shell and rice husk. *Acta Technologica Agriculturae*, Vol. 4:168-175.

Owodunni, A.A., J. Lamaming, R. Hashim, M.H.A. Che Yunus, M.H. Hussin, M.H. Mohamad Kassim, and S. Hiziroglu. (2020). Adhesive application on particleboard from natural fibers: A review. *Polymer Composites*, Vol. 41(12):4448-4460.

Owoyemi, J.M., H.O. Zakariya, and I.O. Elegbede. (2016). Sustainable wood waste management in Nigeria. *Environmental & Socio-Economic Studies*, Vol. 4(3):1-9.

Pandey, A., N. Verma, S. Jain, S.K. Bose, and P. Yadava. (2025). Valorisation of lignocellulosic biomass: A new generation in biorefinery and biomaterials. *Biotechnology for Sustainable Materials*, Vol. 2:20.

Pędzik, M., R. Auriga, L. Kristak, P. Antov, and T. Rogoziński. (2022). Physical and mechanical properties of particleboard produced with addition of walnut (*Juglans regia* L.) wood residues. *Materials*, Vol. 15(4):1280.

Rahman, A., and M.A.H. Khondoker. (2024). Effect of treatment methods on material properties and performance of sawdust-concrete and sawdust-polymer composites. *Polymers*, Vol. 16(23):3289.

Rimkienė, A., S. Vėjelis, A. Kremensas, S. Vaitkus, and A. Kairytė. (2023). Development of high strength particleboards from hemp shives and corn starch. *Materials*, Vol. 16(14):5003.

Salih Akpinar, S., R. Sahin, A. Gürses, I.A. Akpinar, and I. Avinc Akpinar. (2025). The effect of different chemical surface-modified carbon fiber structure and ratio on bond strength in adhesive joints. *International Journal of Adhesion and Adhesives*, Vol. 138:103954.

Samson, D.O., A. Shukri, N.A. Aziz Hashikin, S.H. Zuber, A.D. Addo Buba, M.Z. Abdul Aziz, R. Hashim, M.F. Mohd Yusof, S.J. Gemanam, and P.A. Samson. (2023). Performance of natural product-based materials as adhesives in the fabrication of mangrove wood composites. *Heliyon*, Vol. 9(1):e13032.

Satbaev, B., S. Yefremova, A. Zharmenov, A. Kablanbekov, S. Yermishin, N. Shalabaev, A. Satbaev, and V. Khen. (2021). Rice husk research: From environmental pollutant to a promising source of organo-mineral raw materials. *Materials*, Vol. 14(15):4119.

Shah, A.U.R., A. Jalil, A. Sadiq, M. Alzaid, M.S. Naseem, R. Alanazi, S. Alanazi, A.O. Alanzy, I.H. Alsohaimi, and R.A. Malik. (2023). Effect of rice husk and wood flour on the structural, mechanical, and fire-retardant characteristics of recycled high-density polyethylene. *Polymers*, Vol. 15(19):4031.

Shalbafan, A., and H. Thoemen. (2022). Influence of pressing schedule and adhesive content on the rheological behavior of wood fiber-furnish mats. *Materials*, Vol. 15(4):1413.

Sikhosana, T.S., N.J. Malebo, T.G. Mofokeng, M.P. Motloung, and M.J. Mochane. (2025). Sawdust as a byproduct of wood processing: Properties, applications and a reinforcing filler in hybrid polymer composites. *Polymers*, Vol. 17(11):1523.

Silva, L.C.L., F.O. Lima, V.A. De Araujo, H.F. Dos Santos, F.A.R. Lahr, A.L. Christoforo, H.R. Favarim, and C.I. de Campos. (2024). Influence of pressing temperatures on physical–mechanical properties of wood particleboards made with urea-formaldehyde adhesive containing Al_2O_3 and CuO nanoparticles. *Polymers*, Vol. 16(12):1652.

Sumit, D. Gupta, S. Juneja, A. Nauman, Y. Hamid, I. Ullah, T. Kim, E.M. Tageldin, and N.A. Ghamry. (2022). Energy saving implementation in hydraulic press using industrial internet of things (IIoT). *Electronics*, Vol. 11(23):4061.

Sutiawan, J., A. Syahfiti, S.S. Kusumah, D. Hermawan, R.K. Sari, L. Hakim, E. Mardawati, and M.A.R. Lubis. (2024). Influence of formulation and hot-pressing conditions on the performance of bio-based molasses adhesive for plywood. *Journal of Renewable Materials*.

Taiye, M.A., W. Hafida, F. Kong, and C. Zhou. (2024). A review of the use of rice husk silica as a sustainable alternative to traditional silica sources in various applications. *Environmental Progress & Sustainable Energy*, Vol. 43(6):e14451.

Thavaseelan, D., A.H.L.R. Nilmini, G.A. Appuhamillage, and S. Siriwardena. (2022). Investigation of field performance and film properties of natural rubber latex preserved with a novel chemical. *Journal of Polymers and the Environment*, Vol. 30(5):1840-1848.

Tyagi, V., S. Pandit, A. Sharma, and R.K. Gupta. (2017). Extraction and characterization of silica from rice husk for use in food industries. *International Journal of Food Science and Nutrition*, Vol. 2(4):50-53.

Udokpoh, U., and C. Nnaji. (2023). Reuse of sawdust in developing countries in the light of sustainable development goals. *Recent Progress in Materials*, Vol. 5(1).

Ulusoy, U. (2023). A review of particle shape effects on material properties for various engineering applications: From macro to nanoscale. *Minerals*, Vol. 13(1):91.

Umeghalu, I.C.E. (2010). *The effect of drying techniques on the milling quality of Nigerian rice varieties*. Online at: www.researchgate.net. Accessed on: 20/04/2010.

Verma, V. (2025). A comprehensive framework for residual analysis in regression and machine learning. *Journal of Information Systems Engineering and Management*, Vol. 10(31s).

Wan Abd Rahman, W., A. Md Yatim, A. Mat Zlan, J. Kasim, and N. Mohd Yunus. (2019). Effects of the resin content and particle size on the properties of particleboard made of *Neolamarckia* and *Leucaena* particles. *BioResources*, Vol. 14(3):6079-6087.

Wang, W., H. Wang, X. Jin, H. Wang, T. Lin, and Z. Zhu. (2018). Effects of hydrogen bonding on starch granule dissolution, spinnability of starch solution, and properties of electrospun starch fibers. *Polymer*, Vol. 153:643-652.

Wei, Y., H. Zhang, and L. Wu. (2017). A review on characterization of molecular structure of natural rubber. *MOJ Polymer Science*, Vol. 1(6):197-199.

Yan, X., and B. Chen. (2020). Energy-efficiency improvement and processing performance optimization of forging hydraulic presses based on an energy-saving buffer system. *Applied Sciences*, Vol. 10(17):6020.

Yang, J., Y.C. Ching, and C.H. Chuah. (2019). Applications of lignocellulosic fibers and lignin in bioplastics: A review. *Polymers*, Vol. 11(5):751.

Yang, Y., J. Fu, Q. Duan, H. Xie, X. Dong, and L. Yu. (2024). Strategies and methodologies for improving toughness of starch films. *Foods*, Vol. 13(24):4036.

Yanglipress. (2025, July 2). *Understanding hydraulic presses: How they work and why they matter in manufacturing*. Online at: https://www.yanglipress.com/Understanding-Hydraulic-Presses-How-They-Work-And-Why-They-Matter-in-Manufacturing-id40564916.html. Accessed on: 2 July 2025.

Yildirim, M., and Z. Candan. (2021). Performance properties of particleboard panels modified with nanocellulose/boric acid. *BioResources*, Vol. 16(1):1875-1890.

Żabowski, B., A. Wronka, and G. Kowaluk. (2024). Selected physical and mechanical properties of particleboards manufactured from plantation willow and poplar wood. *Materials*, Vol. 17(16):4069.

UJABE

To cite this article:
Chinedu C. C. Anyene, Nneka J. Ogbuagu, Ogochukwu B. Anyene. 2026. Modelling The Influence of Rice Husk-Sawdust Blend and Natural Binder Type On Agro-Waste Particleboard Properties**.** 1(4): 49-63. https://journals.unizik.edu.ng/ujabe/