JEAS

Journal of Engineering and Applied Sciences 4 (2008) 52 - 57

JOURNAL OF ENGINEERING AND

A functional 1.5 kva electricity power generation using solar photovoltaic system

A.O.C. Nwokoye, L. Ezenwaka*

Department of physics and Industrial physics, Nnamdi Azikiwe University, Awka, Anambra State, Nigeria
**Department of Industrial Physics, Anambra State University, Uli, Nigeria*

Abstract

A functional 1.5KVA Solar Electricity Power Generation capable of powering 6 computer systems with printers, lighting points, fans as well as 3 television sets is presented. The system comprise of 2 solar panels each rated 55W, 18V was designed to work in the range of 50-55W, 12-18V. Two storage batteries rated 200A, 12V are used. The inverter is a modified square wave. There is built in charge control unit and charge with control. The auto power switching was placed between the mains solar panel and battery. Thermally controlled cooling fan made of thermistors and mode indicators is used to ensure that the system is not overheated. The systems working efficiency was found to be between 70 – 75%.

*Key words***:** Photovoltaic; Solar energy; Inverter; Thermistors and generator

1. Introduction

Solar energy according to Roberts (1991) is silent, inexhaustible and non-polluting energy sources which provides daylight, makes the earth hot and it is the source of energy for plant to grow. The sun is a natural nuclear power plant which generates power in the form of radiant energy at such high rate of $3.8x10^{23}$ kW. The earth intercepts a fraction of this (less than a billion). This small amount invariably amounts to a huge value of 1.8×10^{14} kW. On a bright sunny day, each square metre of surface facing the sun receives about 1kW energy from the sun.

The amount of solar energy falling on the earth in three days is equal to the known fossil fuel reserve of the world, Eastop and McConkey (1993). There is more than sufficient energy from the sun to meet present and future needs if we could learn to utilize it economically,

Over the years, solar photovoltaic devices have been employed in producing a useful amount of electricity and by 1958, solar cells were being used in small scale scientific and commercial application.

Casedy and Grossma, (1998) have suggested that the energy available at the earth's surface is only approximately 50% of inclined radiation because as the solar radiation reaching the earth is scattered and absorbed by dust, gas molecules and water vapour as it passes through the earth's atmosphere, the total radiation reaching the earth is greatly reduced. Hislop**,** (1992), has confirmed the steady progress in photovoltaic towards a conventional energy. According to him, Becquerel had in 1839 observed that when light was directed on to one side of a simple battery cell, the current generated usually increased. Solar cells are the building block of a PV system. It is a diode that allows incident light to be absorbed and subsequently converted to electricity and are made of silicon polycrystalline thin films of other amorphous types used in producing solar cells, Nwokoye**,** (2006).

The new millennium has seen PV become cost effective in a rapidly growing number of areas as research and production advances. Photovoltaic presently accounts for a small percentage of electricity generation world wide. The solar cell is the basic building block of a PV system, and are made up of other specific components of copper indium silinide (CIS) and single crystalline thin films usually made of gallium arsenide (GaAs) and cadmium sulphide (CdS).

Most PV generator systems in use today employ rechargeable electric storage batteries for this purpose. The standard solar cell modules are designed to provide the correct output voltage to effectively charge these batteries. The solar generation provides all the energy required by the load over the year. The storage battery is made to act as a 'buffer' between the solar array and

the load, and go on supplying power to the load during the periods of low sunlight. Zia et, al, (1994) has stated that thermal power plant (condensing power plants) converts the energy of a chemical fuel into mechanical energy which is then converted into electric energy by a generator.

The conversion of solar radiation into electricity by means of the PV cell is at present the most sophisticated technology development in solar energy devices, Roberts et, al, (1982).

The PV power installation has been on the increase in various countries of the world and as at 2004, a summary Table is as illustrated in Table 1 and has a very bright promising future.

PV power installation as at 2004 has extended into more than 15 countries both developed and developing countries with total installed capacity in the range of 273 kW and 363,000 kW.

Table 1
Photovoltaic Installed capacity in some countries of the world as of 2004

	Country	*Cumulative*			*Installed as of 2004*	
		Off-grid PV (kW)	Grid connected (kW)	Total (kW)	Total (kW)	Grid-tied (kW)
1	Japan	84,245	1,047,746	1,131,991	272,368	267,016
2	Germany	26,000	768,000	794,000	363,000	360,000
3	United States	189,000	175,000	365,200	90,000	62,000
4	Australia	48,640	6,760	52,300	6,670	780
5	Holland	4,769	44,310	49,079	3,162	3,071
6	Spain	14,000	23,000	37,000	10,000	8,460
7	Italy	12,000	18,700	30,700	4,700	4,400
8	France	18,300	8,000	26,300	5,228	4,183
9	Switzerland	3,100	20,000	23,100	2,100	2,000
10	Austria	2,687	16,493	17,180	2,347	1,833
11	Mexico	18,172	10	18,182	1,041	0
12	Canada	13,372	512	13,884	2,054	107
13	Korea	5,359	4,538	9,892	3,454	3,106
14	United Kingdom	776	7,386	8,164	2,261	2,197
15	Norway	6,813	75	6,888	273	0

2. Design and working principles

A functional block diagram of solar electric power inverter is shown in fig 1. The light provides large amount of energy. The PV array is designed and arranged in such a way as to collect all direct sunlight incident on its surface.

The module contains a number of solar cells which responds to the light by creating an electrical current which moves through the series of cells into the charge controller. The charge controller regulates the amounts of current and protect the battery. The battery serves as a storage bank and provides steady amount of power from the DC to AC inverter.

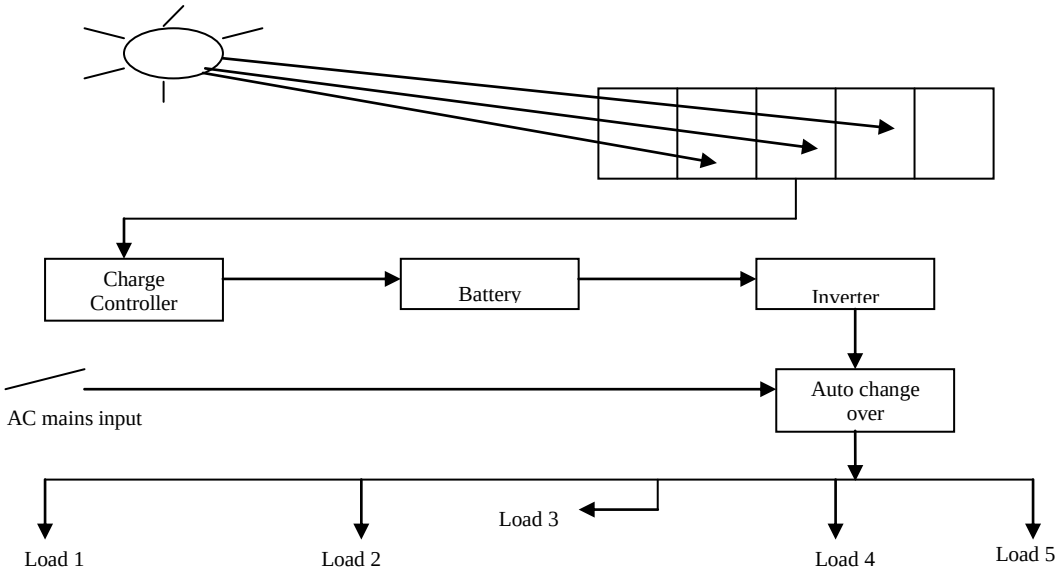

Fig. 1. Block diagram of Solar Electric Power inverter.

The system is a 1.5kVA solar power inverter designed to serve as back up utility failure/alternative source of power for home and office. It is solar energy dependent. The sunlight provides the large amount of energy required for the process. The photovoltaic (PV) array is designed and arranged in such a way that it collects all direct sunlight incident on its surface. The module contains a number of solar cells which responds to the light by creating an electrical current which moves through the series of cells into the charge controller. The charge controller regulates the amount of current and prevents the battery from over charging as it charges the two set of batteries connected to it and provides steady amount of power from the DC to AC inverter. This electrical device perform the operation of converting DC from the array or battery to single or three phase AC which is suitable for AC loads. The circuit breaker provides current voltage protection against the load connected to it.

The system specifications include; operating temperature of between 25-40^{0}C, voltage operation, 24V DC/220-240V AC, input voltage 24VDC, battery rating 12V/200AH (x2), power generated 1.5kVA and solar panel rating 55W with voltage range of between (12 – 18V) x 2.

2.1. Circuit analysis

In fig. 2, the circuit derives its power from the storage battery connected between R_{13} and R_{12}, Vaughan (1987). The metal parts of the thermistor is tightened to the surface of the heat sink bearing the MOSFET drivers. The 1kΩ resistor is connected to the variable resistor to prevent the whole battery voltage from going to the base of Q5 when the variable resistor is turned to zero resistance. The temperature controlled cooling fan driver circuit will turn-on a relay, which then turns on the cooling fan to cool the system.

The oscillator circuit which provides the pulses needed to drive the inverter is shown in fig.3, where as fig. 4 is the driver circuit made up of bank of MOSFETs. It serves to add power factor to the pulses generated by the oscillator circuit before being sent to the transformer.

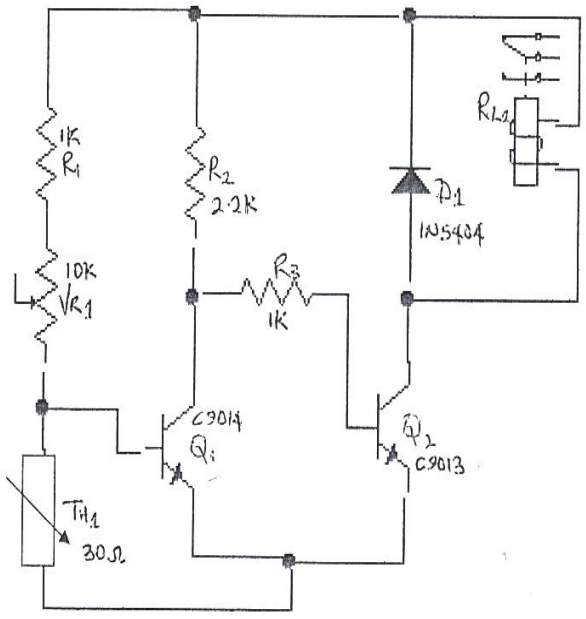

Fig. 2. Temperature controlled cooling fan circuit.

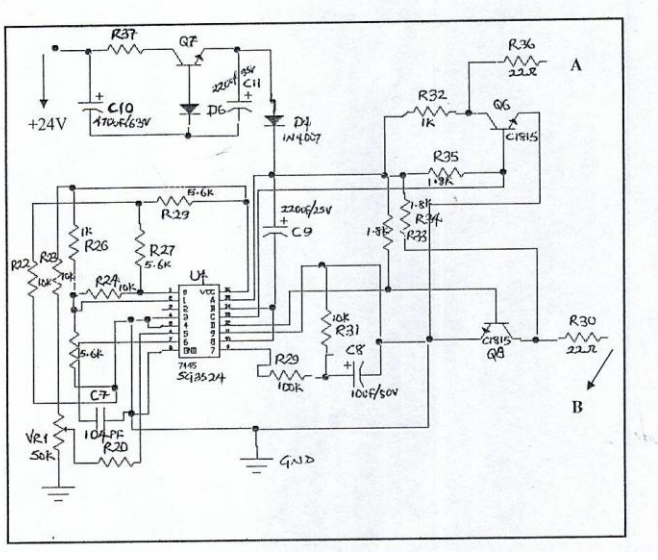

Fig. 3. The oscillator circuit.

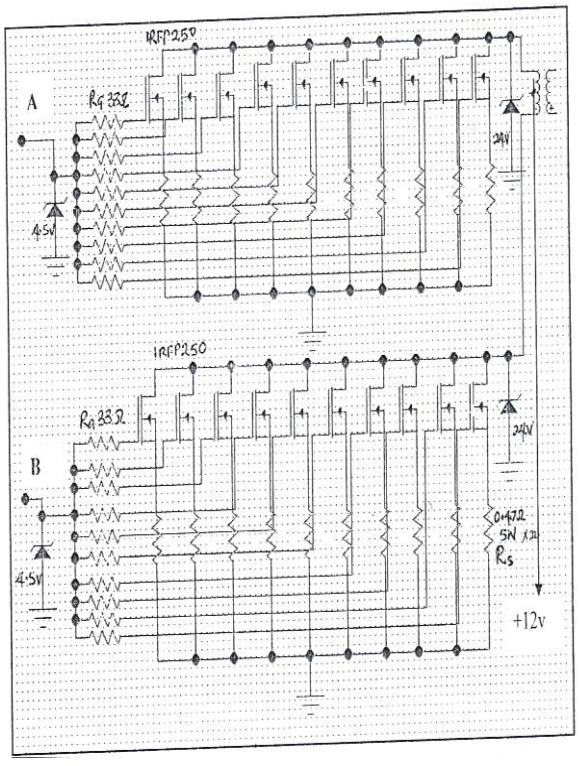

Fig. 4. The driver circuit with bank of MOSFEFTs

Figs. 5a and 5b are the control circuits which serve to prevent overcharging of the battery thus avoiding shortening the batteries life. The circuit is made up of an operational amplifier comparator and bank of MOSFETs (IRF9140 N and IRFP150 N); www.technology.niag.coral.on.ca.

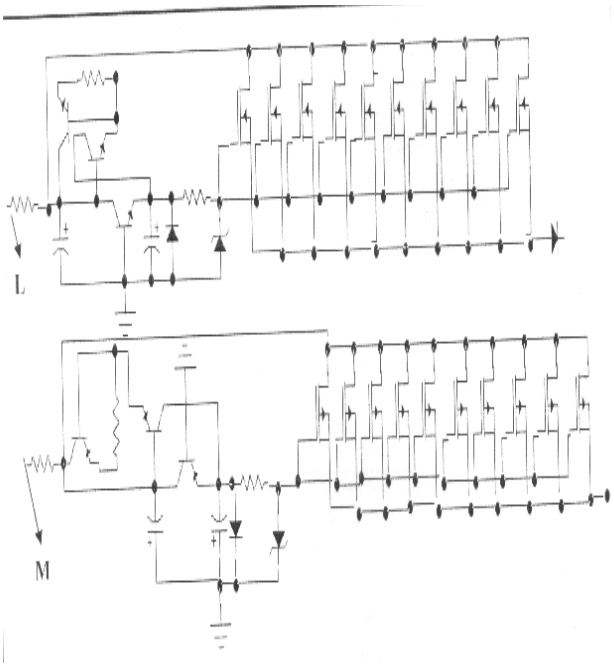

Fig. 5a. The charge control circuit.

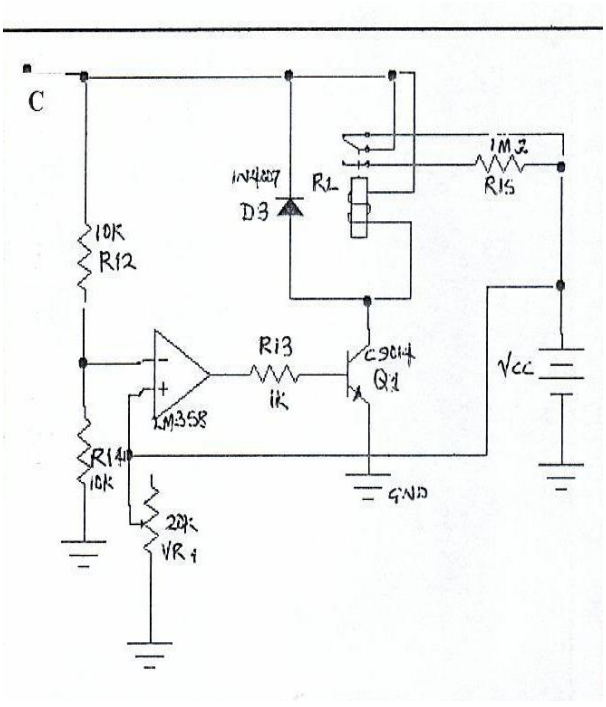

Fig. 5b. The charge control circuit with Op-Ampp.

Fig. 5a derives its power supply usually from the current amplifier circuit formed by the bank of MOSFETs which amplifies current from the solar panel (points L and M) and fed to the comparator. The resistor R_{11} and R_{12} were carefully selected to bias the inverting input. This ensures that the OP-Amp remains in the low state. The relay is in turn connected in the normally open state which keeps the voltage flowing to the battery until the battery voltage becomes nearly equal to the supply voltage. The feed back loop immediately biases the non-inverting input of the Op-Amp thereby throwing it to the high state. This high state turns on the transistor which switches on the relay. The relay at this stage changes to the normally closed state and thus pass the supply voltage to the battery through R8 (6mΩ). It thus starts the tickle charging, that is little or no charging at all) of the battery. This will continue until the battery voltage drops thereby reversing the whole process.

Fig. 6 is the auto-switching circuit which switches the different part of the system ON or OFF. The required operation was obtained with the switching circuit. It was found to be smoothly inter-phase with the whole system. Fig. 6 is the switching power supply and it therefore switches ON or OFF various parts (or circuit) of the system when the main power is available. The circuit therefore centers on the switching power of transistors cascaded in order to drive series of electromagnetic relays. The relays were such that they can be driven to switch a device ON or OFF depending on what is connected at the output of the relays and on which point such connection has been made.

The three outputs of the relays include normally open, normally closed and the common output. The common output serves as a connection point between the other two. The 12 V rectified supply is from a step – down transformer connected to the main power supply. The system has been designed to operate independent of the main power supply. However, the transistor will switch – ON thereby turning ON the relay irrespective of the main power supply. As a result, whatever is connected to the relay thus either switches ON or OFF.

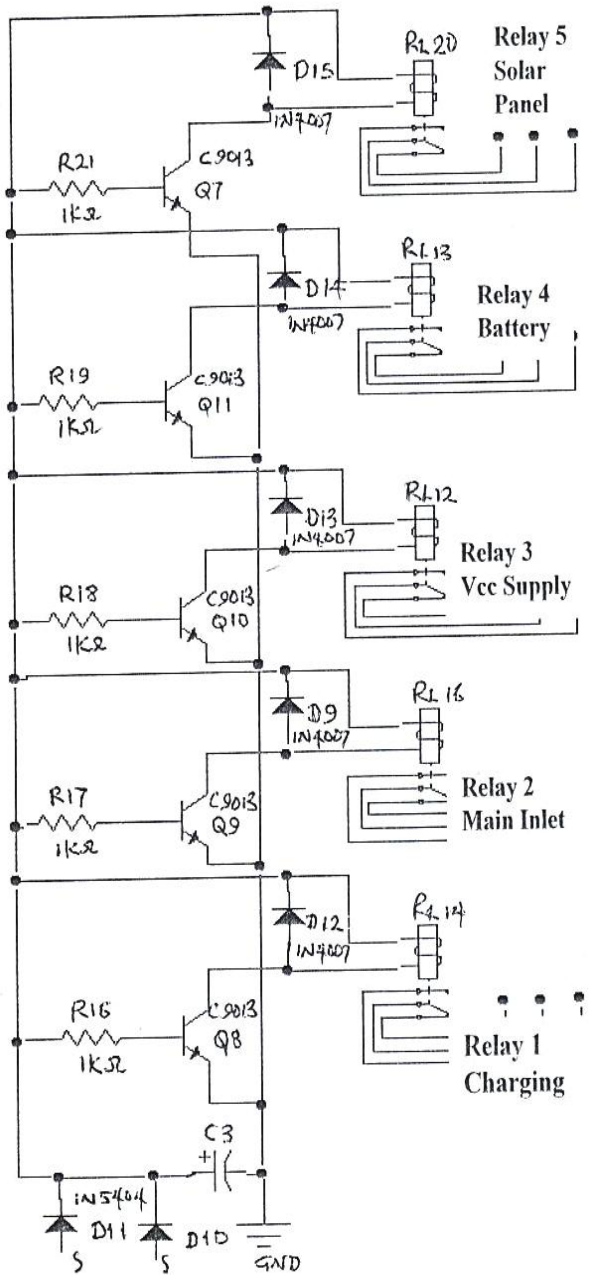

Fig. 6. The Auto-switching circuit.

Test results

Tests were carried out on the various units of the system. This was followed by continuity test to ensure voltage continuity in the circuit and to guide against shorts. The instruments used were the following.

- Digital voltmeter model "Oxford Drum 8906"
- Electronic bench work programme (for circuit simulation)

The system was able to power various systems effectively with record of high performance. The oscillation frequency was found to be between 50Hz-60Hz (± 5%) of the utility supply.

3. Conclusions

The solar power generator as a means of generating electric power is seen to have powered the systems effectively well. The power supply is quite steady and devoid of fluctuation. The system maintenance is free. The control and regulating features of the system added advantage. It was found that during sunshine periods, the PV panels effectively delivered the electrical power which is in turn supplied to the load and charges the batteries as suggested by Rao and Paruleka (2004). Their suggestion on the decline in the cost of PV system with increasing production volume of electricity hence their reliable performance long life and commercial production with engineering design and technique.

The solar PV electric system generation is really an alternative source of electricity supply in line with Rai (2004). The prediction that if more panels were added in series, the systems could power more loads hence desired voltage could be achieved. The PV systems can always convert solar radiation into electrical energy directly without intermediate thermal stage.

References

Eastop, T.D., McConkey, A., 1993. Applied Thermodynamics. Pearson Education Ltd, Delhi, pp.1-2, 696-697.

Hislop, D., 1992. Energy Option, An Introduction to Small Scale Renewable Energy Technologies. Intermediate Technology Publication Ltd., New York, pp.1-13.

Nwokoye, A.O.C., 2006. Solar Energy Technology, Alternative Energy Resources and Environmental Science. Rex Charles and Patrick Ltd., Nimo, Anambra State.

Rai, G.D., 2004. Solar Energy Utilization. Khana Publishers, Delhi, p.460.

Rao, S., Paruleka, B.B., 2004. Energy Technology, Non Conventional, Renewable and Conventional. Khana Publishers, Delhi, pp.230-249.

Roberts, D.R., Hill, R.R., Coyle, J.D., 1982. Light, Chemical Change and Life. A Source Book in Photochemistry. Open University Press, Miuton Keynes, MK 76AA., p.8.

Simon, R., 1991. Solar Electricity, A Practical Guide to Designing and Installing Small Photovoltaic Systems. Prentice Hall, Engle Cliffs, NJ, p.3.

Vaughan, P., 1987. Systematic Electronics. Holder and Stoughton Publishing Company, Great Britain, P. 29.

Zia, Y.A., Juan, L., Balar Jr., 1994. Electromechanical Energy Devices and Power Systems. John Wiley and Sons, New York.