JEAS

JOURNAL OF ENGINEERING AND APPLIED SCIENCES

Journal of Engineering and Applied Sciences 8(1) (2012), 53-62

A re-engineered data acquisition model for full industrial automation

[1]Godwin O. Uzedhe, and [2]H. C. Inyiama

[1]*Electronics Development Institute, Awka, Federal Ministry of Science and Technology, Nigeria.* osmenawin22@yahoo.com
[2]*Electronics and Computer Department, Nnamdi Azikiwe University, Awka, Nigeria.* drhcinyiama@gmail.com

Abstract

This paper presents a re-engineered data acquisition model for full industrial automation. Data acquisition is a most probable tool for industrial survival and has taken a lead in most automation attempts. The acquisition models in use today seem to be static in view and cannot be used adequately for emerging industrial demands. An analysis of few of these models indicates that full automation cannot be attained by their application. In this paper, an all-inclusive data acquisition approach to full automation of the industrial environment is provided through re-engineering. A mathematical analysis and modeling of the full industrial automation environment were carried out followed by a hardware platform that could implement the model in any application area. The paper also provides requirements specification for customizing the model in specific areas of application. The paper concludes by drawing a scenario for the model's hardware platform implementation.

Key words: Full Automation, Data Acquisition, Model, Re-engineering

1. Introduction

Many industries operating in the world today and most especially those in African keep degrading faster than their intended operational life time. Automation of the industrial processes goes a long way to improve their investment yield as well as the operational life span. However, the industrial automation processes in use today cannot sustain the teaming population. New automation processes for upgrading and sustaining the industries are therefore needed. This could be done through data acquisition re-engineering.

Data have been acquired over the years in different scientific and technological fields for analysis and control purposes. At first, direct observation of physical phenomenal changes was used to judge and effect the required changes to a system under control. This method soon faded away because it is cumbersome, does not reflect past events, and operations must be halted to effect changes. The next stage was the development of instruments that enabled scientists and technologists to read changes in physical phenomena from processes and their environments and also make adjustments without interfering with the processes. To keep a history of past events, recording of occurrences was done manually on paper. These recorded data however, were filled with a lot of inconsistencies, redundancies, non-standard abbreviations, illegible writings etc, which rendered the resultant data susceptible to a high degree of analytical error. The instruments used are also highly affected by the environment in which they were being used. The human handling of these instruments is another critical point of error introduction to the recorded data. The error prone data produce erroneous results which when applied to the system under control results to further inaccuracies. To faithfully acquire data from a process therefore, there must be a way of eliminating or at least reducing human intervention in picking up data directly from the process. The following phase of data acquisition thence provides a means of connecting instruments directly to these processes. The instruments were then equipped with tools to read and record the required physical changes. Reading of these changes was made possible with the use of transducers that convert the physical phenomena to equivalent electrical (either voltage or current) changes, while recording is by storing these electrical changes in some form of memory device. Direct instrument acquisition of data with the use transducers and storage devices is still being used today. However, today's data acquisition process has changed so much due to high data quality

demands that meet the modern day industry and consumer needs. With the appearance of different data acquisition tools in the industrial market, there has been a lot of advancement in the field of industrial automation. However, the automation models need to be upgraded through re-engineering to cope with new technologies and demands. Most data acquisition models only take care of machine health and cannot be adopted for full automation. For a data model to fully automate a system through data acquisition, it must look not only into the machines but also into the changes in the environment and its effect on human beings in and around the plant.

2. Related Work

Jozsel et al (2001) present a method for high speed data acquisition system development using the Ptolemy II modeling frame work to put together subsystems of different characteristics which interact in a variety of ways. The Ptolemy II framework (Davis II et. al., 2001; Lee et. al., 2001} hierarchically organizes all subsystems so that the properties of the complete system can be simulated without having to resort to ad-hoc integration of multiple models. Acquisition of data either from machines, the environment, or living things has been growing rapidly and several individuals and bodies are constantly seeking new ways of dealing with the much complex situations that are ever unfolding. Kotiadis and Robinson (2008) describe a conceptual modeling process for general knowledge acquisition from a real world problem domain. In some cases, assumptions have to be made (Robinson, 2008) because the real world is not fully known or knowable. In general, these assumptions are made by the problem owner—the organization. Organizational wrong decision as to the use of old fashioned data acquisition tools will result to insufficient and error prone data. Piantadosi (1997) classifies these errors as "random" and "bias". Random errors are probabilistic and especially when theoretical explanations and predictions have been accounted for. In order to eliminate or reduce these errors, several data acquisition models using various device platforms (IEEE, 2012; PXI, 2000; Thomas, 2008; B & B Electronics, 2002) have been developed over the years. The focus of these methods however, does not relate to a heterogeneous solution that combines the machines, environment and humans in and around the industry for data acquisition.

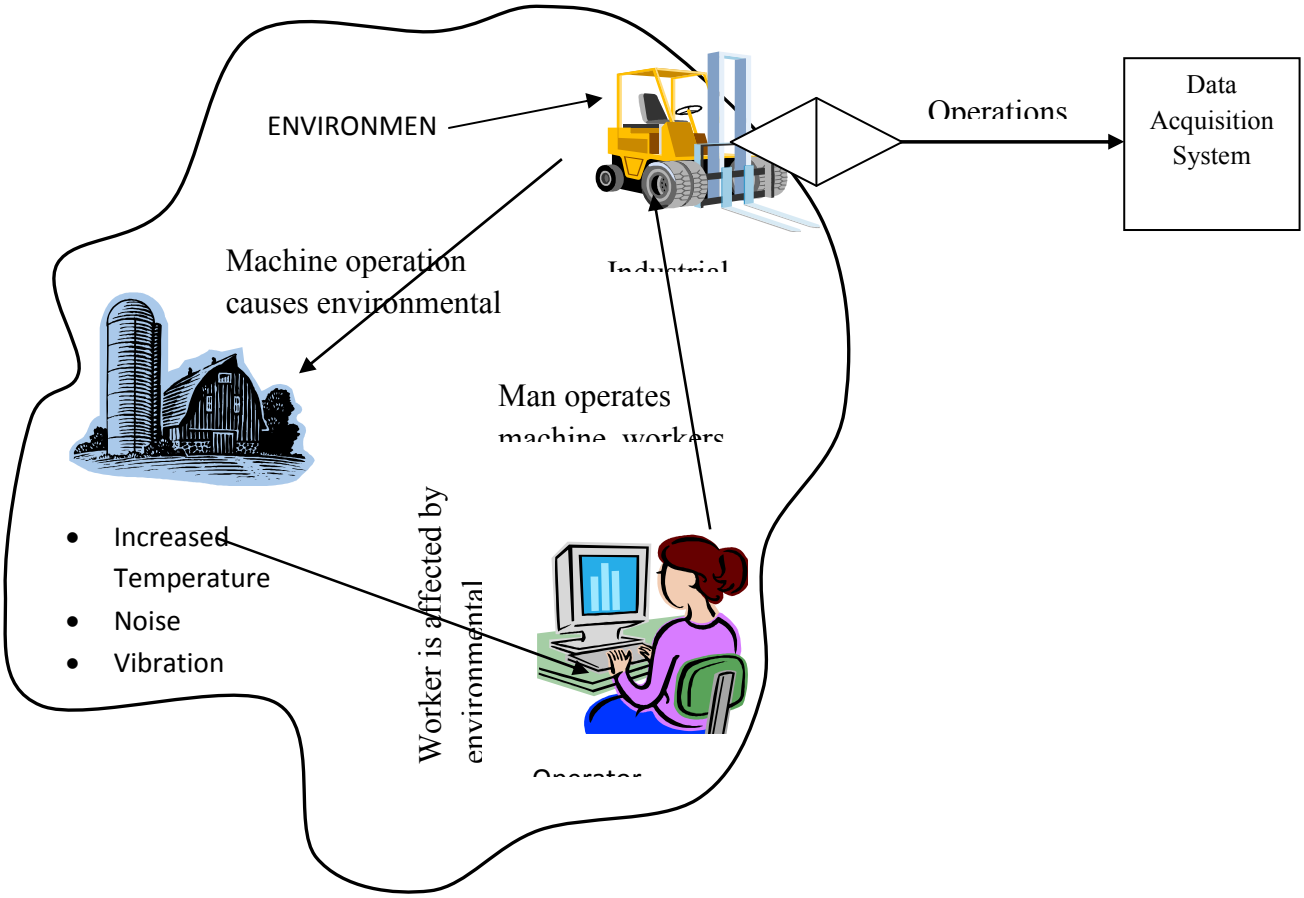

Figure 1: Existing Industrial Data Acquisition Process

3. Analysis of Data Acquisition Process in Existing Industrial Environments

As depicted in figure 1, industrial operations cause different environmental changes. These changes affect the environment, the industry workers' health, and the equipment and devices carrying out the operation. The workers' health on the other hand affects the operation by a way of introducing delays or carrying on wrong operations. However, the data acquisition process in this consideration only reaps data from the operating machines.

Practically all industrial operations in African sub region today (Nigeria inclusive) operate this kind of acquisition system if at all it is present. This has resulted to a great deal of industrial degradation and loss of huge amounts of money in the sector. In this increasingly demanding economy, industries most go automated. However, being automated is not just enough. Industries must seek new ways to efficiently manage not just machine health, but also the human and environmental health in order to reduce or even eliminate risk of degradation and operate at maximal point for full return on investment.

3.1 Primary Activities

The first set of activities that place a drawback on the industrial operations are those that directly affect the operation such as breakdown of machinery, incessant shutdown of operation due to maintenance, error batch production, etc. Most industries today focus on these activities to the detriment of others which in most cases will not seem to be part of the operation. Obviously, the factors of these activities may be known *a priori*. Hence setting up an automation system to minimize their effects is always the utmost consideration of the organization.

The best automation for the management of these activities is to acquire their control parameters on a continuous timely basis and monitor the probability of their events. These parameters are in the form of temperature, pressure, humidity, vibration, gas concentration, light intensity, speed, voltage level, liquid level, etc that are direct results of machine operation. When these parameters are properly monitored and controlled, operation drawbacks can be drastically reduced. However, the choice of parameters to be considered for automation in any scenario is dependent on the needs of the organization.

3.2 Secondary Activities

The next set of activities that tactfully but greatly place drawbacks on the operations of any industry are termed secondary. This is so because they are not quickly considered as major parts of the operation. Hence most industrial organizations tend to ignore a greater part of it, if not all, in their early plan. When these activities are not properly planned and taken care of at the earliest possible time, they can seriously influence or combine with the primary activities to cause a tremendous damage to the system. This set of activities is imposed by the industrial operations on the environment and the people working within and around the industry.

Industrial processes are not operated in isolation; they often require human beings working in and around the plant to keep processes in line. In the absence of these humans, the operation could be halted or at least reduced. The long absence of human attendants to a process will definitely result to a total shutdown of the process. The operations within the industry on the other hand, generate all sorts of unhealthy conditions that seriously affect the efficiency of the workers. Working within an environment with large temperature variations for example has been known to cause various heat related diseases (heat stress) such as heat cramps, heat stroke, heat rash, heat exhaustion, and other early heat illnesses.

The external environment of any industrial process will impose some form of threat to its operations. An electronic device working close to a vibrating machine will experience some spurious noise which will introduce an erroneous operation at some point. A machine that dissipates heat in other to cool off will operate more efficiently in a cold environment. Therefore, to properly manage an industrial process, its environment must also be monitored. In a good automation industrial consideration, data must be acquired from the surroundings of the process as well. This set of data will help manage the system as well as the environment.

4. The Proposed Model

Discussions on information gathered so far show that many industries considered to be automated today do not generally take into account the effect of secondary activities on industrial operations. Hence, it is regarded here that such industries are semi-automated. An industrial operation is a make-up of

both machine and human resources and takes place within an environment. Consideration of only one aspect of the operation for automation therefore will not produce a reliable result and cannot produce the optimal organizational goal.

As depicted in figure 1, existing data acquisition systems tend to reap data only from the operating machines and processes with little or no consideration for the effects on the environment and humans alike. A quick analysis of such systems for today's industrial operation is therefore required.

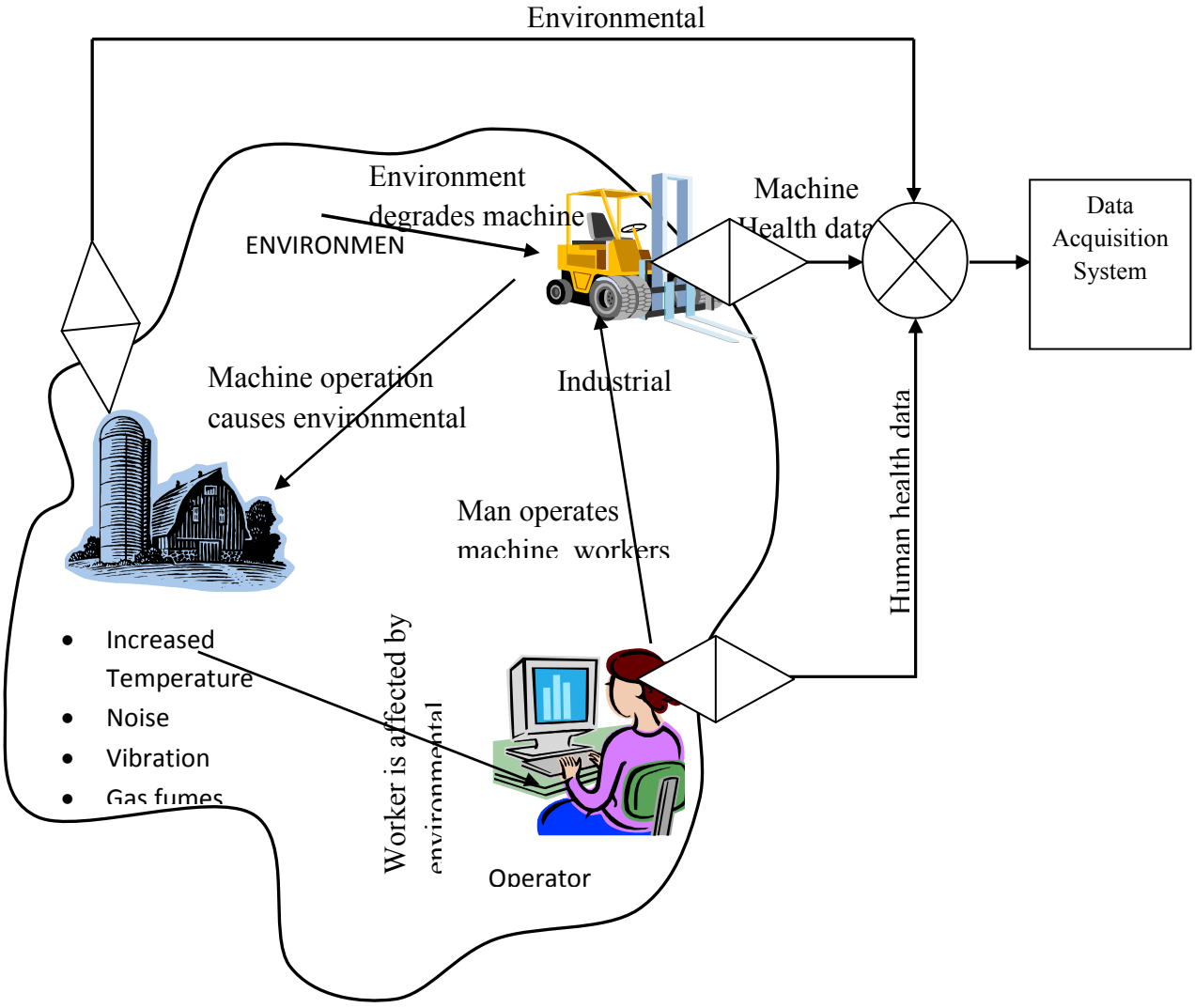

Figure 2: Data Acquisition Model for Full Industrial Automation

Data acquisition systems being developed today are geared towards satisfying the primary activities in an industry. For a data acquisition system to achieve the goal of the industry, it must be tailored to extract data from the operating machines, the environment, and the human beings working in and around the plant as shown in figure 2. It is less expensive for example, to carry out a routine health check on workers compared to handling emergency situations. With an all-inclusive data acquisition system, constant routine check could be carried out on both the machines and workers in a plant. These checks would be based on the real-time data acquired by the automation system. Again when workers loose health quickly, the organization is bound to hire new employees to replace them. The new employees will need training

and retraining to be able to keep-up with the new job challenges. This is an expensive process for any organization. The health of individuals, machines and that of the environment must therefore be considered in an automated system for it to be termed full automation.

By analysis the industrial data acquisition model of figure 2 could be represented thus:

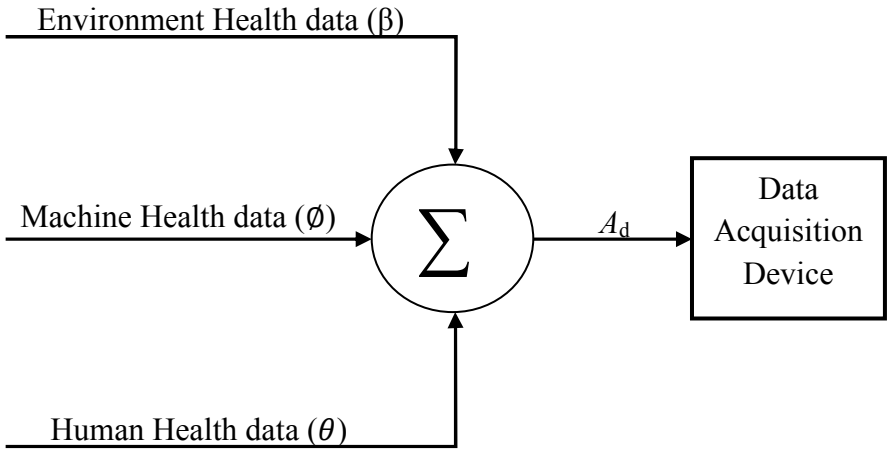

Figure 3: Mathematical Modeling of Industrial Data Acquisition

The acquired data A_d is a composite sum of the environmental health indicator β, machine health indicator ∅, and the human health indicator θ. Hence the total acquired data is:

$$A_d = \emptyset + \beta + \theta \quad (1)$$

However, each of these components is a function of some number of factors that depend on the size and type of industry. An industrial process generally produces known and unknown conditions. The effects of the unknown could be negligible in some cases but can be tremendous in others and can be found with regression analysis.

The machine health ∅ is a function of three main factors, the machine internal processes P, its human control index I, and its external environmental conditions E, such that:

$$\emptyset = f(P, E, I) \quad (2)$$

P and E may be composed of different processes and conditions which are dependent on the type of operations and the environment in which the operations are carried out. I is a function of human expertise and health condition.

That is,

$$P = P_1 + P_2 + P_3 + - - - - - + P_{N-1} + P_N \quad (3)$$

And

$$E = E_1 + E_2 + E_3 + - - - - - + E_{R-1} + E_R \quad (4)$$

Where,

$$N = 1, 2, 3, 4, - - - - - - -$$

$$R = 1, 2, 3, 4, - - - - - - -$$

The rate of health degradation of the machine depends on the magnitude and the time integral of P_N and E_R

Therefore,

$$f(P) = \sum_1^N \left[\int_{t1}^{t2} a_N P_N(t)dt\right] \quad (5)$$

and

$$f(E) = \sum_1^R \left[\int_{t1}^{t2} b_R E_R(t)dt\right] \quad (6)$$

Where a and b are the magnitudes of the factors P_N and $E_R$cancelling the factors when their values equal to zero, and t is the time interval ($t_1 \leq t \leq t_2$) within which measurements are taken.

Recall that,

$$\emptyset = f(P, E, I)$$

$$\emptyset = f(P) + f(E) + f(I) \quad (7)$$

Thus,

$$\emptyset = \sum_1^N \left[\int_{t1}^{t2} a_N P_N(t)dt\right] + \sum_1^R \left[\int_{t1}^{t2} b_R E_R(t)dt\right] + f(I) \quad (8)$$

Again, the environmental health β is affected by machine emissions M and external environmental condition E. The environmental health could therefore be represented thus,

$$\beta = f(M, E) \quad (9)$$

M is a sum function of all machine releases and E is as defined in equation (4) hence,

$$M = M_1 + M_2 + M_3 + - - - - - + M_{L-1} + M_L \quad (10)$$

Where,

$$L = 1, 2, 3, 4, - - - - - - -$$

The effect of the machines releases on the environmental health is a function of its magnitude and the rate of the emission over time.

Thus,

$$f(M) = \sum_1^L \left[\int_{t1}^{t2} c_L M_L(t)dt\right] \quad (11)$$

From equation (9)

$$\beta = f(M) + f(E) \quad (12)$$

Combining equations 12, 11, and 6, therefore,

$$\beta = \sum_1^L \left[\int_{t1}^{t2} c_L M_L(t)dt\right] + \sum_1^R \left[\int_{t1}^{t2} b_R E_R(t)dt\right] \quad (13)$$

The last component of the acquired data is the human health condition θ. Of course, the human health within the industrial environment is affected by the operation releases M, the external environmental conditions E, and the internal diseased condition of the individual D.

Thus,

$$\theta = f(M, E, D) \quad (14)$$

M and E are as defined in eqs. (11) and (6). However, D is a measure of some human health indicators which may not depend on how long the individual has been in a disease condition. The human health measurement is composed of several unknown factors that cannot be directly taken. Generally, basic human wellness indicators such as blood pressure, heartbeat rate, and the body temperature can be used as a measure of the individual's health indicators.

These basic indicators may increase or decrease with time of exposure to certain environmental conditions. Therefore, the individual's diseased condition could be represented thus,

$$f(D) = D_{BP}(t) + D_{HR}(t) + D_{BT}(t) \quad (15)$$

Where,

D_{BP} = individual's blood pressure indicator.

D_{HR} = individual's heartbeat rate indicator.

D_{BT} = individual's body temperature indicator.

t = time of exposure

Therefore,

$$f(D) = \int_{t1}^{t2} D_{BP}(t)dt + \int_{t1}^{t2} D_{HR}(t)dt + \int_{t1}^{t2} D_{BT}(t)dt$$

$$= \int_{t1}^{t2} [D_{BP}(t) + D_{HR}(t) + D_{BT}(t)]dt \quad (16)$$

From equation (14),

$$\theta = f(M) + f(E) + f(D) \quad (17)$$

Combining equations 6, 11, 16, and 17, therefore,

$$\theta = \sum_1^L \left[\int_{t1}^{t2} c_L M_L(t)dt\right] + \sum_1^R \left[\int_{t1}^{t2} b_R E_R(t)dt\right] + \int_{t1}^{t2} [D_{BP}(t) + D_{HR}(t) + D_{BT}(t)]dt \quad (18)$$

Now, comparing equations 7, 12, and 17 shows that the human health is a function of the environmental health, and that the machine health is sub-function of the environment and the human control index I. As stated before, I depends on the human expertise and wellness condition. The human expertise cannot be easily quantified and it is not the focus of this research. However, the human wellness condition could be determined as given in equations 15 and 16. Therefore, for the purpose of this work, I will be

assumed as D so that equations 2 and 7 are re-written as,

$$\emptyset = f(P, E, D) \quad (19)$$

and

$$\emptyset = f(P) + f(E) + f(D) \quad (20)$$

Putting equations 12, 17, and 20 into equation 1, then

$$Ad = \emptyset + \beta + \theta$$

$$Ad = \big(f(P) + f(E) + f(D)\big) + \big(f(M) + f(E)\big) + \big(f(M) + f(E) + f(D)\big)$$

$$= f(P) + f(E) + f(D) + f(M) + f(E) + f(M) + f(E) + f(D)$$

Removing redundancies by taking the average of all measured components therefore results to,

$$Ad = f(P) + f(E) + f(D) + f(M) \quad (21)$$

Equation 21 clearly shows that data should be acquired from the internal processes of operation, the external environment to the industry, machine emissions, and the human health conditions.

Thus,

$$Ad = \sum_1^N \left[\int_{t1}^{t2} a_N P_N(t)dt\right] + \sum_1^R \left[\int_{t1}^{t2} b_R E_R(t)dt\right] + \sum_1^L \left[\int_{t1}^{t2} c_L M_L(t)dt\right] + \int_{t1}^{t2} [D_{BP}(t) + D_{HR}(t) + D_{BT}(t)]dt \quad (22)$$

The application of equation 22 to any industrial setting will provide adequate data for full automation with respect to the operational specifications of the organization. The focus of this research work is to provide a re-engineered model hardware platform that could be used for data acquisition in a full automation, cost efficient industrial environment. Figure 4 is a hardware platform model of the re-engineered data acquisition system.

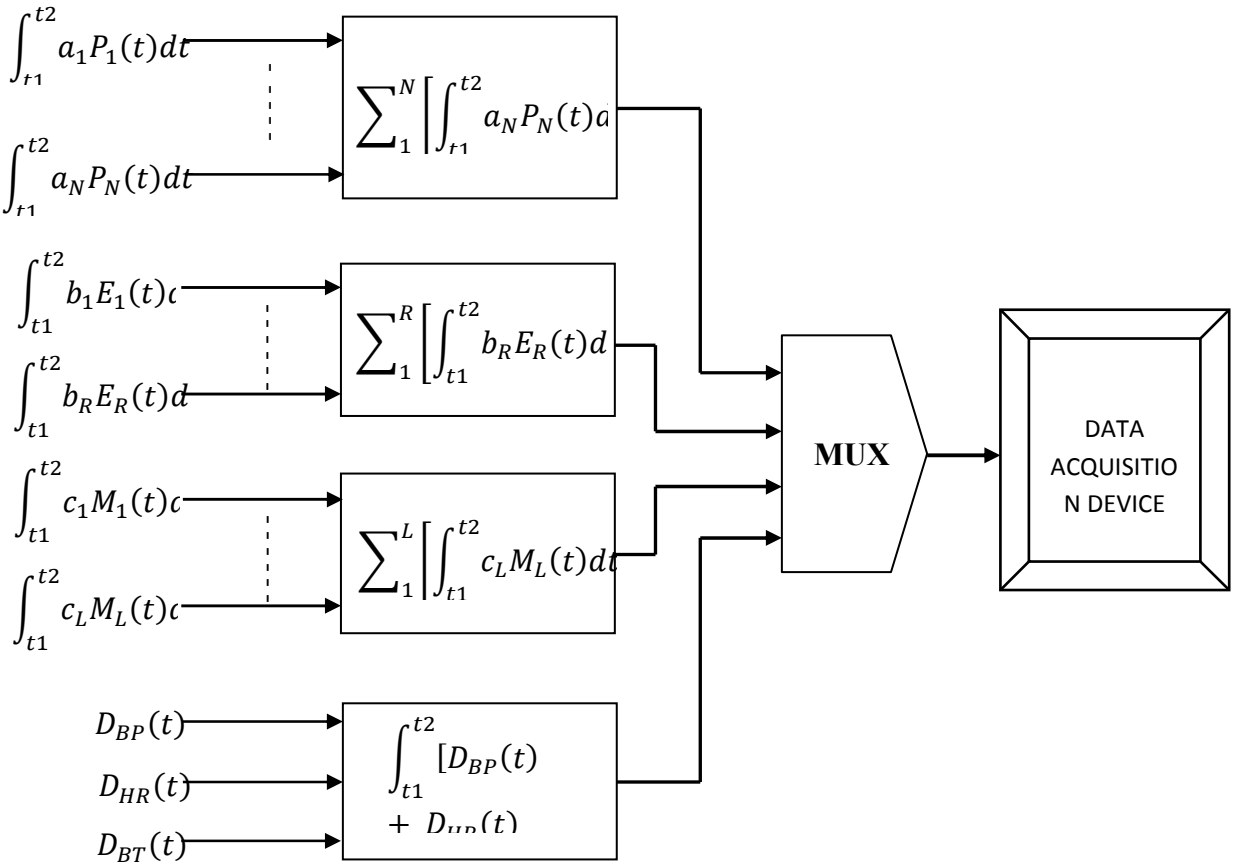

Figure 4: A Re-engineered Model of Data Acquisition Hardware Platform

5. Requirements Specifications for the Model Adoption

Table 1: Industrial Components Position Specifications

Components	Position	Degree of Mobility
External environment	Fixed	Zero
Industrial Buildings	Fixed	zero
Heavy Machines and Equipments.	Fixed	Very low (almost zero)
Light machines and equipments	Non-fixed	High
Humans (Workers)	Non-fixed	Very high

Table 1 shows the position and the degree of mobility of the industrial components for data acquisition. The location of data collection points for fixed machines and the external environment can be determined. On the other hand, human positions and those of machines or equipment movable by humans cannot be predicted.

Considering the position, location and the degree of mobility of these industrial components, it will be necessary to identify an appropriate position for a data acquisition device and determine how data will be connected from the various components to the main device. It is also good to know the nature of the different parameters to be measure and collect from each of these components.

Heavy duty industrial machines and equipment normally have much more hash conditions and high level of parameter values to cope with. Larger and more robust types of sensor/transducer devices, which need to be connected with wires to the acquisition device, are usually needed. The distances of components such as humans with high degrees of mobility from the acquisition device at any point in time cannot be determined. Therefore, a sensor/transducer device to be used for data collection should be such that supports mobility without interruption to the data collection process. Wireless sensor technology is the best option to be used for parameter measurement and data collection from such components. Again measurement of parameters from the external environment of the industry will pose a much distance challenge and thus need a data collection process that is not easily intercepted by human activities. Table 2 gives a summary of the type of devices for data collection from the different components

Table 2: Sensor/Transducer Type for Data collection

Components	Position	Sensor/Transducer Type
External environment	Fixed	Wireless
Industrial Buildings	Fixed	Wireless
Heavy Machines and Equipments.	Fixed	Wired/Wireless
Light machines and equipments	Non-fixed	Wireless
Humans (Workers)	Non-fixed	Wireless

6. Specifics for Platform Implementation

A brief look at the requirements specifications as depicted in Tables 1 and 2 would suggest the model to adopt for data acquisition. With application of recent innovations in wireless technologies, the model could be used to support any kind of data irrespective of its location and degree of mobility. Figure 5 shows a typical example of the platform implementation with a microcontroller device used for data control and preprocessing. All parameters from high degree mobility components (Humans and moveable equipment) are acquired wirelessly (see figure 5). The external environment needs also be connected wirelessly in order to reduce cabling and avoid obstructions. However, heavy duty fixed machines and equipment could be wired, wireless, or both. The implementation includes the use of a

remote computer for high memory capacity long term storage.

Conclusion

In recent years, different solutions have been put forward to solve the problem of industrial degradation and create sustainability for industrial survival. Old solutions seem to be hanging around some existing model platforms that need to be revisited with a new approach. Re-engineering the existing data acquisition models for full automation as discoursed in this paper is the right direction to optimum solutions for industrial survival especially in developing countries.

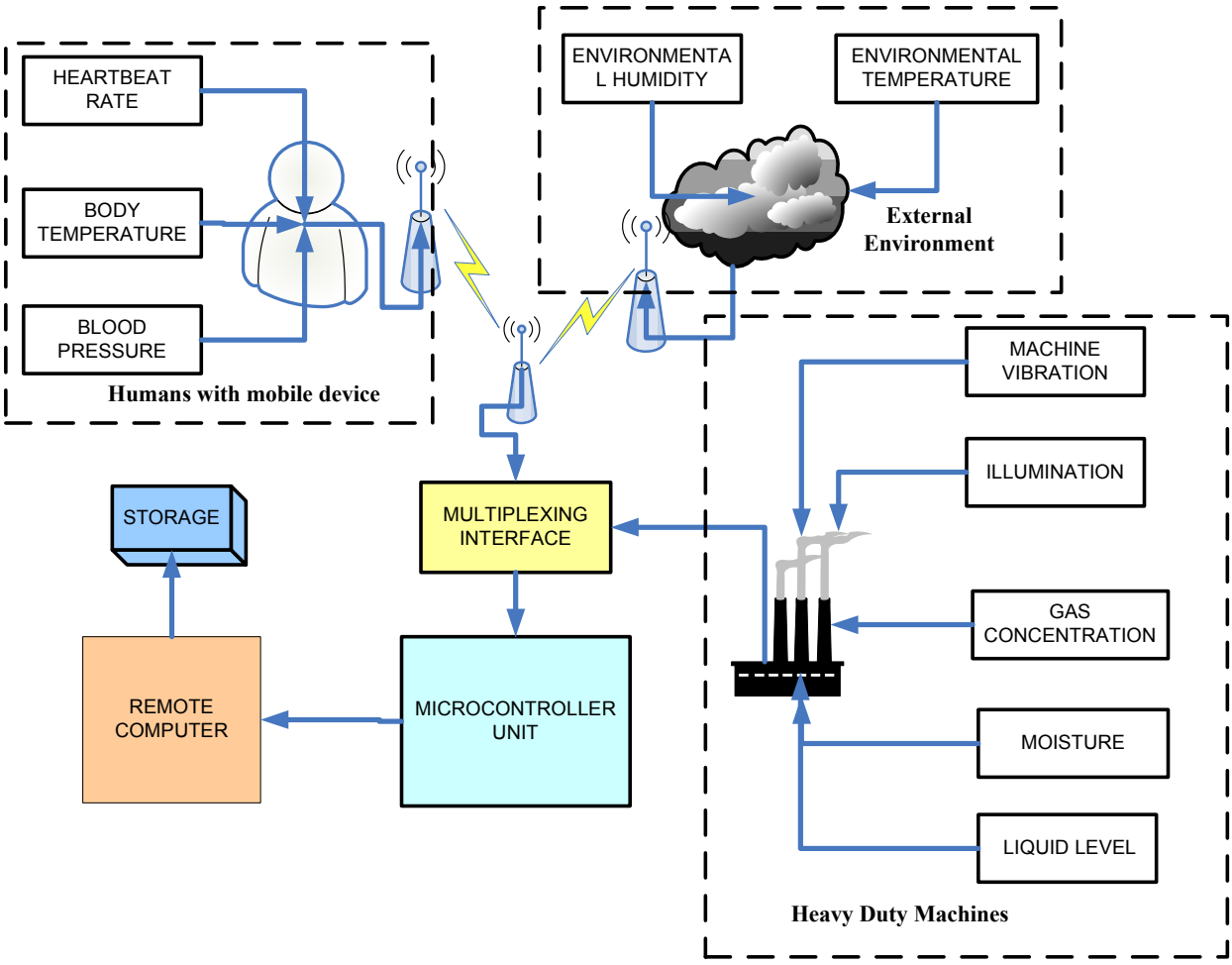

Figure 5: Hardware Platform Implementation

References

B & B Electronics White Paper, 2002. Ethernet Basics, http://www.bb-elec.com 03/03/2012.

Davis II John, et al (2001), "Heterogeneous concurrent modeling and design in java", Technical Memorandum UCB/ERL M01/12, Electronics Research Lab, Department of Electrical Engineering and Computer Sciences, University of California at Berkeley California,USA, March 2001

IEEE Standards Association, IEEE Nuclear Power Engineering Collection (Including Historical Standards): VuSpec, http://standards.ieee.org/findstds/prod/cds/nuclear_all.pdf 17/05/12.

Kotiadis Kathy and Robinson Stewart 2008. Conceptual Modeling: Knowledge Acquisition And Model Abstraction, Proceedings of the 2008 Winter

Simulation Conference, University of Warwick Coventry, CV4 7AL, UK.

Lee, E.A. Liu, J. Liu, X. McCarthy, J. Neuendorffer, S. Sachs, S. and Xiong Y. 2001. Designing Systems with Ptolemy II, Kluwer, February 2001.

Ludvig, Jozsef et al 2001. Reprogrammable Platforms for High-speed Data Acquisition, Thirty-Fifth Asilomar Conference on Signals, Systems, and Computers, November 4-7, 2001, Asilomar Hotel Conference Grounds, CA.

Piantadosi Steven 1997. Clinical Trials – A Methodologic Perspective, John Wiley & Sons, Inc. USA. Pp273-274.

PXI Systems Alliance 2000. PCI eXtensions for Instrumentation An Implementation of CompactPCI, http://www.pxisa.org/Spec/pxispec20.pdf 17/05/12.

Robinson, S. 2008. Conceptual modeling for simulation part I: definition and requirements, Journal of the Operational Research Society 59 (3): 278-290.

Thomas, George 2008. The Extension: A Technical Supplement to Control Network, Contemporary Control System, Inc. Volume 9 Issue 2, http://www.ccontrols.com 03/03/12