JEAS

Journal of Engineering and Applied Sciences 6 (2010) 78-87

JOURNAL OF ENGINEERING
AND
APPLIED SCIENCES

Comparative analysis of seepage through dam using different analytical and numerical methods

E.E. Arinze, J.C. Agunwamba

Department of Civil Engineering, University of Nigeria, Nsukka

Abstract

Seepage analysis is the indispensible part of dams structural analysis. The analysis is usually done to prevent excess seepage that leads to sand boil which is the major cause of dam failure. In this research work comparative analysis of seepage through dam is carried out using analytical methods (Schaffernack's and L-Casagrande's methods), and numerical methods (Finite element and Finite difference). The finite element method analysis was done using six-node triangular element mesh whereas finite difference analysis was done by dividing the problem in cells and applying spreadsheet iterative calculation. The result obtained shows that the methods have similar hydraulic head patterns. Moreover L-Casagrande's, Finite element and Finite difference methods support the existence of Seepage face. Analytical and graphical methods are recommended for homogenous, isotropic and unconfined seepage flow while numerical method is recommended for complex situations such as anisotropic and heterogeneous conditions. Possible improvement for future work were also discussed.

1. Introduction

1.1. Preamble

Seepage is defined as the flow of fluid usually water through a soil under hydraulic gradient. Seepage analysis forms an important and basic part of geotechnical Engineering. Seepage analysis may be required in volume change prediction, groundwater contamination control, slope stability analysis and the design of earth structures such as dams, dyke and leeves. .

Flooding has been one of the biggest and most continuous natural disaster in the world. In an effort to avert disasters in terms of loss of life and damage to properties caused by flooding, dams were built all over the world to control the flow of rivers. A dam is defined as a natural or manmade embankment, with a specific purpose to hold back water. Dams can also provide additional advantages apart from flood management, such as to provide water for irrigation, furnish hydroelectric power and improve the navigability of waterways. Dams that are built to protect land alongside rivers from frequent flooding caused by a rise in the water level of the river are called leeves. The structures prevent flooding of the adjacent area from Small floods and thus reduce the occurrence of flood. Dams usually contain flood waters when the river stage rises. When the river stage drops, dams do not hold back water. Thus dams see intermittent use only during times of high river stages. However, when floods of large magnitude occur, such as floods with a recurrence interval of more than 100 years, there are situations in which dams can cause more damage as these structures increase the volume of water that is held in the channel and if dams failure occurs, the sudden release of water can increase the size of the flooded area. To avert this disaster dam design, construction, maintenance and supervision holds a very important role. In order to avoid dam failure, it is important to analyse, possible cause of failure. The most common causes are over topping, erosion, Seepage and Piping (Bligh, 1915).

Seepage through or under dam may occur at a high enough rate to cause a boil, usually called sand boil. Presence of sand boils can play a major role in leeve failure. Seepage of flood water through or under a dam is a normal process. However, when seepage occurs at a high rate, the seepage water can carry soil material with it. Seepage through dam is relatively common, but when the seepage creates a drainage path and soil material is washed out through a boil on the landslide of the structure, a potentially dangerous condition can be created. A boil is a condition under which enough pressure is produced to pipe water through or under the dam with sufficient velocity to carry earth material to the landward side. Continuous piping can cause sufficient material to exit through the boil that a large void is created inside the dam, which can result in the weakening of the structure and eventually failure. Not all sand boil leads to dam failure. (Blight, et al., 1915).

Any seepage problems must consider three principal factors, which are soil media, type of flow and boundary conditions. The soil media are important in the determination of seepage characteristics since different soil media will exhibit difference behaviour. Some of the most important characteristics that need to be determined from the soil media are porosity and coefficient of permeability. Soil media can be classified by these different characteristics. For example, if the coefficient of permeability is the same at all points in the flow region and it is independent of the direction of the flow, the soil is classified as homogenous and isotropic. If on the other hand it is dependent on the direction of the flow, it is classified as heterogeneous and isotropic. For soil that is only independent on the direction of the flow, it is classified as homogenous and anisotropic (Bouwer, 1962).

The type of flow can be classified as either steady state or transient flow. In a steady state type of flow, time is not considered as a variable and the position of the water table does not change. On the other hand, a transient problems required time as a variable and so an initial condition needs to be described aside from boundary conditions and a time step needs to be determined to correctly illustrate the influence of time on the problem. In transient problems, it is always important to choose the right time steps needed to solve the problems.

Boundary conditions are needed to correctly describe the problem. In flow domains where all the boundaries are fixed and therefore known initially the flow is said to be confined but where one boundary is a free surface, the flow pattern is said to be unconfined. For this instance where seepage is evaluated through a dam, the important boundary conditions that need to be defined are the upstream face, downstream face and free water surface. To accurately describe the problem, on the upstream and downstream faces, the pressure head is due to water pressure and varies with the height. The free water surface on the other hand has two conditions that need to be satisfied, the first of which is that atmospheric pressure is maintained on the boundary, while the second is that no flow crosses the free surface. Both of these conditions need to be satisfied simultaneously in order to accurately describe the location of the free surface (Lamb, 1932).

Seepage analysis is an important tool which can be applied to predict seepage and to investigate measures to prevent or reduce the magnitude of seepage flow. Losses due to flow through dams must .be minimized and seepage flows that may cause piping must be controlled. Several seepage control measures can be implemented on dams to avoid failure. Control measures that can be implemented to control seepage to reduce risk of leeve failure include installation of a previous toe drain in the dam which will provide a ready exit for seepage through embankment, placement of a horizontal drainage layer during dam construction and incorporation of an inclined drainage layer in dam design (Cheng and Li, 1972).

Control of seepage is not the only reason for analyzing seepage. Seepage analysis can provide information with which to evaluate other consequences such as excessive soil saturation, the magnitude of seepage forces and uplift pressure that can lead to dam-failures. Seepage analysis can also be used in evaluating proposed future design alternatives and dam maintenance design. Seepage path prediction is important in order to assess the necessary steps to avoid dam failure. Determination of the seepage path is an important tool that can be used to determine the probability of damage to the dam due to piping and in the evaluation of piping design control measures (Casagrande, 1940).

The details discussed above show all the available condition that can be considered in seepage analysis. Moreover, many methods have been adopted in recent years for determination of seepage through homogenous earth dams ranging from elementary method which include dupuits and Gilboy solution to more encompassing methods such as Schaffernacks, Casagrande, Pavlosky and conformal mapping techniques. Recently efforts have advanced in the application of numerical methods such as finite element method, finite difference method, Boundary element method and boundary fitted coordinate method.

1.2. Objectives of study

The objectives of this research are as follows:
(1) To use numerical methods (Finite element and finite difference methods) and Analytical methods in determining seepage flow through earth dams.
(2) Performing the comparative analysis of the methods to give reliable recommendation on the methods to use for any specific work.
(3) To determine and/or prove the existence of seepage face using the method cited.

1.3. Scope of study

The study is limited to the case of homogenous, isotropic, unconfined and steady - state seepage flow through earth.

2. Literature review

2.1. Analytical method of seepage analysis

Solution for groundwater seepage problems have been developed since the pioneering work of Henry Darcy (1956). For example, many analytical solutions were developed and presented by Harr (1962) and Polubarinova-Kochina (1962). The groundwater seepage problem can be described by Darcy's Law and continuity equations. The seepage equation is obtained by combining these two equations. Since the seepage equations are based on these two equations, the assumptions and limitations that apply to these equations also apply to the seepage equation. Darcy's law basically demonstrates a linear dependency between the hydraulic gradient and the discharge

velocity.

Several investigators (Shaffernak, 1917; Iterson 1917; Casagrande, 1932) have suggested various methods to determine the quantity of seepage and locus of the phreatic line. Kozeny (1931) studied the seepage through an earth dam with a horizontal toe drain (under filter) resting on an impervious base assuming the earth dam to have a parabolic upstream face. Applying the method of fragments, Pavlosky (1931) determined the quantity of seepage and locus of phreatic line in an earth dam resting on an impervious base without a filter. The flow was decomposed into three fragments and the hydraulic resistance of the soil in the upstream side has been considered for finding the flow characteristics. Casagrande (1940) made a correction for the entrance condition at the upstream face and recommended the parabolic free surface to start at a point 0.3Δ upstream, where Δ is equal to base width of the upstream triangular part.

2.1.1. Limitation of analytical methods

Although, analytical solutions are the most accurate methods in calculating seepage, the analytical method has several drawbacks. One major drawback of this method is that it is difficult to apply, as it is limited to groundwater flow with uniform hydraulic properties and simple boundary geometry. In some cases, analytical solutions cannot be obtained because of non-linear features such as variable permeability or moving boundaries.

2.2. Numerical methods of seepage analysis

Several investigators (Cividini and Gioda, 1990; Billstein et al., 1999; Bardet and Tobita, 2002) have applied numerical techniques to determine the quantity of seepage and locus of the phreatic line. Determination of phreatic line by numerical techniques involves iteration and requires special formulation.

The variational inequality formulation and its FEM solution for the free boundary problem of 2D steady state seepage flow was given by Guo et al. (1991), also a further investigation was made on the non-steady state seepage problem, taken the seepage flow of wells as an example. Li et al. (2003) described an element free method (EFM) for seepage analysis with a free surface which was based on the moving least square method which needs only the information at nodes. It avoids trouble-some modification of the mesh as in finite element method. Being irrelative of the nodes, the mesh for quadratic is fixed throughout the iterations in determining the free surface. And the nodes can be easily added, moved or deleted in the iterations. Considering the original free boundary problems as a shape optimization problem, Lcontiev et al, (2001) performed boundary elements discretization. A mathematical programming technique for numerical simulation of unconfined flow through porous media was presented. Taking the state variable and free boundary variable as independent variables they treated the discretized problems as nonlinear mathematical program and apply interior point algorithm to solve it. This simple, yet accurate and computationally efficient technique can be easily applied to 2D real size problems and extended to 3D problems. Finite difference method (FDM) based on boundary fitted coordinate (BFC) transformation was presented by lie et al. (2004). The curvilinear grid system, with computational boundary being coincident with the physical boundary was numerically obtained by solving the poisson equation. Seepage analysis can then be done by FDM in a uniform transformed orthogonal coordinate system. The method was applied to analyze the steady seepage in foundation pit, a lock foundation, and an embankment dam with a free surface.

2.2.1. Limitation of Numerical Methods

They are approximate and requires in-depth knowledge of mathematics and computer programming and/or softwares.

3. Theoretical background and analysis

3.1. The physics of groundwater flow

Groundwater flows in the direction of decreasing potential energy caused by differences in pressure and elevation. A common measure of this potential energy is the total head h, which is simply the sum of pressure head and elevation head

$$h = \frac{p}{pwg} + z \tag{1}$$

where P is the pressure acting on a unit mass of water, ρw is the density of water, g is the acceleration due to gravity, and Z is the elevation of the water. Equation (1) assumes that water is an incompressible fluid (the density is the same at all pressures). As water flows down the head gradient, energy is lost due to friction from the boundary and decreasing elevation. The volume rate of flow per unit area is directly proportional to the rate of change of head as given by the differential form of Darcy's Law.

$$q = -K\Delta h \tag{2}$$

where q is the volume rate of flow per unit area, known as the specific discharge or Darcy velocity and k is the coefficient of permeability of the fluid.

For steady-state conditions, continuity requires that the amount of water flowing into a representative elemental volume be equal to the amount flowing out. The amount of water is measured by volume, which is equivalent to measuring mass since we have already assumed that water is an incompressible fluid. As well, the elemental volume cannot contain any source or sinks.

Thus, factors such as precipitation and evaporation

are ignored. With the assumptions, continuity requires that the following equation holds

$$\frac{\partial qx}{\partial x}+\frac{\partial qy}{\partial y}+\frac{\partial qz}{\partial z}=0 \quad (3)$$

In other words, the sum of net change in the discharge rate of all component directions must equal zero.
Substituting the components of Eq. (2) into Eq. (3) we have

$$\frac{\partial}{\partial x}\left(-k\frac{\partial h}{\partial x}\right)+\frac{\partial}{\partial y}\left(-k\frac{\partial h}{\partial y}\right)+\frac{\partial}{\partial z}\left(-k\frac{\partial h}{\partial z}\right)=0 \quad (4)$$

Now, if we assume that the hydraulic permeability, K, is independent of x, y and z (which is true under homogenous, isotropic conditions) then Eq. (4) becomes

$$\frac{\partial^2 h}{\partial x^2}+\frac{\partial^2 h}{\partial y^2}+\frac{\partial^2 h}{\partial z^2}=0 \quad (5)$$

Which is Laplace's equation in the three dimensions - the governing equation for groundwater flow through an isotropic, homogenous aquifer under steady-state conditions.

3.2. Applying finite element method to seepage

Flow of water that occurs in land drainage or seepage under dams can be described by Laplace's equation .

$$\frac{\partial}{\partial x}\left(kx\frac{\partial \phi}{\partial x}\right)+\frac{\partial}{\partial y}\left(ky\frac{\partial \phi}{\partial x}\right)=0 \quad (6)$$

Where $\phi = \phi(x,y)$ is the hydraulic head and kx and ky are the hydraulic permeability in the x and y directions, respectively. The fluid velocity components are obtained from Darcy's Law as

$$v_x=-kx\left(\frac{\partial \phi}{\partial x}\right) \quad v_y=-ky\left(\frac{\partial \phi}{\partial y}\right)$$

Equation 6 is similar to heat conduction equation. Where lines of ϕ = Constant are called equipotential surfaces, across which flow occurs.
The appropriate boundary conditions associated with Eq.6 are illustrated in fig. 1. The region to be modeled is shown shaded in fig 1. Along the left and right surfaces, we have the boundary conditions.

3.2.1. Applying finite element method to seepage

Flow of water that occurs in land drainage or seepage under dams can be described by Laplace's equation.

$$\frac{\partial}{\partial x}\left(kx\frac{\partial \phi}{\partial x}\right)+\frac{\partial}{\partial y}\left(ky\frac{\partial \phi}{\partial x}\right)=0 \quad (6)$$

Where $\phi = \phi(x,y)$ is the hydraulic head and kx and ky are the hydraulic permeability in the x and y directions, respectively. The fluid velocity components are obtained from Darcy's Law as

$$v_x=-kx\left(\frac{\partial \phi}{\partial x}\right) \quad v_y=-ky\left(\frac{\partial \phi}{\partial y}\right)$$

Equation (6) is similar to heat conduction equation. Where lines of ϕ = Constant are called equipotential surfaces, across which flow occurs.

The appropriate boundary conditions associated with Eq.6 are illustrated in fig. 1. The region to be modeled is shown shaded in fig. 1. Along the left and right surfaces, we have the boundary conditions.

ϕ = Constant

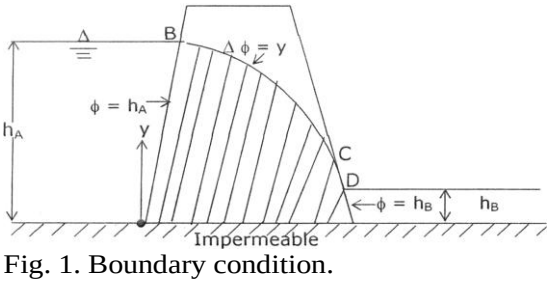

Fig. 1. Boundary condition.

The impermeable bottom surface corresponds to the natural boundary condition $\partial\phi/dn = 0$, where n is the normal, and does not affect the element matrices; the values ϕ are unknowns. We first assmne a location for the line of seepage and impose the boundary condition $\phi = y_i$ at node on the surface. Then, we solve for $\phi = \tilde{\phi}$ and check the error $(\phi_i - y_i)$. Based on this error, we update the locations of the nodes and obtain a new line of seepage. This process is repeated until the error is sufficiently small. Finally portion CD is a surnce of seepage. If no evaporation is taking place in this surface, then we have the boundary condition

$\phi = \bar{y}$

where y is the coordinate of the surface

3.2.2. Introduction to the problem

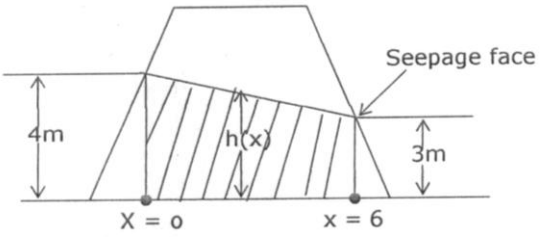

Fig. 2. Two dimensional cross section of a dam.

Considering the seepage through a darn introduced in Eq.(4) for the homogenous, isotropic case. We wish

to estimate the value of the groundwater head throughout a two dimensional cross section of a dam shown in Fig. 2. The formulation of the problem is as follows. The dam at y = 0 rests on impermeable bedrock, so the bottom boundary is a no flow boundary. The upper boundary is also no flow boundary (no precipitation, evaporation, e.t.c). In addition, the total head at each point on the upper boundary must equal its elevation. The reason for this is that there is no pressure acting on the upper boundary, making total head equal to elevation (see Eq. 1). The total head on the left and right boundaries are known and are 4.00m and 3.00m respectively. Note that we do know the vertical location of the' upper boundary except that at x = 0.00m, y = 4.00m.

For homogenous isotropic case with no accumulation or loss of water from the system, the equation to be solved for this problem is Laplace's equation in 2-dimensions.

$$\frac{\partial^2 h}{\partial x^2}+\frac{\partial^2 h}{\partial y^2}=0 \tag{8}$$

Dupuits Assumptions

1. The exit point coincides with the tailwater (No Seepage face).
2. The hydraulic gradient is constant along a vertical line (flow is horizontal).
3. The hydraulic gradient is equal to the slope of the free surface.

Under Dupuits assumptions, flow is one-dimensional. An analytical solution can therefore be obtained by solving.

$$\frac{\partial^2 h}{\partial x^2}=0 \tag{9}$$

With boundary condition h = 4.00m at x = 0.00m and h = 3.00m at x = 6.00m. The Analytical solution of this boundary value problem is

$$h(x)=\frac{-x}{6}+4 \tag{10}$$

Eq. (10) is use to determine a close initial guess for the location of the upper boundary. Then the problem is solved using the finite element method and the result compared with the resulting head at the upper boundary with the guess given by Eq. (10). If they do not agree to two decimal places, the newly calculated head at the upper boundary is used as the new vertical location and the procedure is repeated again each time comparing head to the vertical location until two decimal place agreement is obtained along the upper boundary.

3.2.3. Finite element method using six-node triangular elements

The shape functions for the six-node triangular master element (Fig. 3) are:

$N1(u,v) = (u+v-1)(2u+2v-1)$ $N_2(u,v) = -4u(u+v-1)$

$N_3(u,v) = u(2u-1)$ $N_4(u,v) = 4uv$

$Ns(u,v) = v(2v-1)$ $N_6(u,v)=-4v(u+v-1)$ (11)

The mapping that relates the coordinates of the master element to general element Ωe is

$$x(u,v)=\sum_{i=1}^{6} xn_i^e N_i(u,v) \tag{12}$$

$$y(u,v)=\sum_{i=1}^{6} yn_i^e N_i(u,v) \tag{13}$$

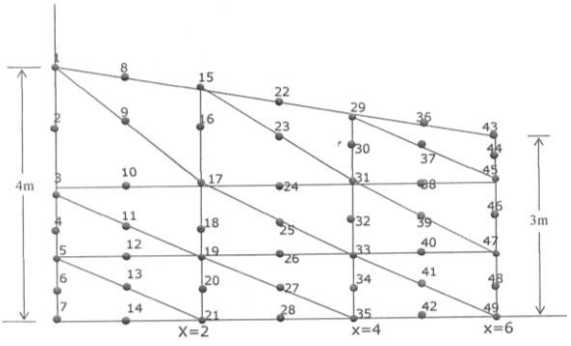

Fig. 3. Six-node triangular element mesh.

Where $n^e_i,(xn^e_i, yn^e_{i),\ i=1,2,\ldots 6,}$ are the vertices of the general six-node triangular element.

3.2.3. Finite element solution

The finite element approximation to this problem is given by

$$h_{approx}=\sum_{j=1}^{47} h_i w_i(x,y) \tag{14}$$

Where each h_i is the total head at node j generated by the program steady m in matlab (from Eq. 2 and wj (x,y) is the basis function representing node j). The basis function for a particular node j is formed using the shape functions of the elements associated with node j.

3.3. Formulation of the finite difference modelling problem

The finite difference method is a numerical method which can be used for solving partial differential groundwater equations. The computational domain is discretized by rectangular cells although quadrilateral cells can also be used. For simplicity, we consider the cell lengths in the x and z directions to be constant and equal i.e. Δx = Δz. The unknown variables are defined in the nodes which are placed at the centers of the cells

or at the intersection points of cell boundaries. To follow a unique law for the nodes, we consider them to be at the intersection points of cell boundaries throughout the work. From the geometrical point of view, it is obvious that complex boundaries or complex inner structures can only be reproduced in a very simplified way to be step functions.

The formulation of the finite difference modelling problem is basically carried out by substituting the differential functions by approximated values derived from Taylor-series expansions of the functions. The equations are then put together in an explicit or implicit way. By developing the derivatives of unknown functions with the help of Taylor series expansions of the functions and taking into account initial and/or boundary conditions, we obtain the solution to the problem (Hinkelmann, 2005).

For the solution of the differential using Finite difference scheme, first we discretise the computational domain as shown below

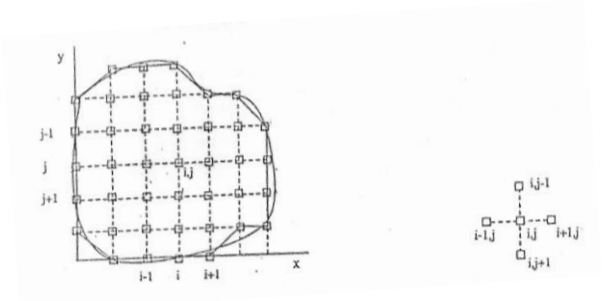

Fig. 4. Discrete representation of two-dimensional region.

3.3.1. Discretization of function derivatives

As shown in Fig.5 as continuous function F(x) may be defined in terms of discrete values Fj corresponding to values Xi spaced along the x-axis, Assuming that the function F is differentiable, the function may be expanded by using a Taylor expansion about x.

3.3.2. Discretization of function derivatives

As shown in Fig.5 as continuous function F(x) may be defined in terms of discrete values Fj corresponding to values Xi spaced along the x-axis, Assuming that the function F is differentiable, the function may be expanded by using a Taylor expansion about x.

$$F(x+\Delta x) = F(x) + \frac{dF}{dx}(x)\Delta x + \frac{1}{2!}\frac{d^2F}{dx^2}(x)\Delta x^2 + --- \quad (15)$$

Equation 15 may be written for $x = x_i$

$$f_{i+1} = f_i + \frac{df}{dx}1i\Delta x + \frac{1}{2!}\frac{d^2f}{dx^2}li x^2 + \frac{1}{3!}\frac{d^3f}{dx_3}li\Delta x^3 + --- (16)$$

$$f_{i-1} = F_i + \frac{df}{dx}1i\Delta x + \frac{1}{2!}\frac{d^2f}{dx^2}li\Delta x^2 + \frac{1}{3!}\frac{d^3f}{dx_3}li\Delta x^3 + --- (17)$$

The First order differential may be approximated from discrete values by subtracting Eq.16 from Eq.17

$$\frac{df}{dx}|_i \approx \frac{f_{i+1} - f_{i-1}}{2\Delta x} \quad (18)$$

The second order derivative may be approximated by adding Eqs. 16 and 17:

$$\frac{d^2F}{dx^2}|_i \approx \frac{f_{i+1} + f_{i-1} + 2f_i}{\Delta x^2} \quad (19)$$

Equations 18 and 19 are second order approximations of the First- and-second order derivations. The errors between the exact and approximate differentials converges quadratically towards its exact values.

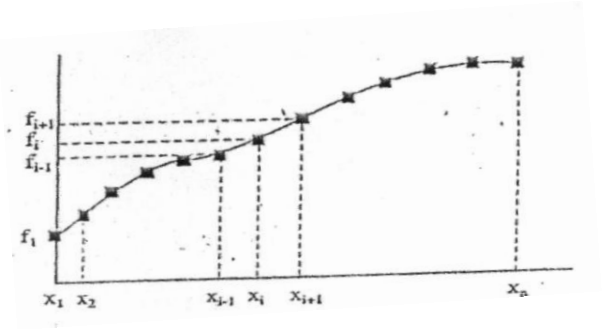

Fig. 5. Discrete representation of a continuous function F.

3.3.3. Discretization of two-dimensional problems

Equations 18 and 19 also apply to functions of two variables x and y, such as the two-dimensional distribution of total head over a spatial region. As shown in Fig.4, the two-dimensional space is discretized with a grid of points, the coordinate of which are denoted by i and j. Carved boundaries have to be approximated with straight segments in order to be described with points. If Δx and Δy are the nodes spacing in the x and y directions, respectively the discretized form Eq.2 at point i,j is

$$\frac{kx}{\Delta x^2}(h_{i+1,j} + h_{i-1j}) + \frac{ky}{\Delta y^2}(h_{i+1j} + h_{i.j-1} - 2h_{ij}) = 0 \quad (20)$$

As in Fig. 4b only the value of h at the nodes surrounding the node I,j contribute to Eq. 20
When $\Delta x = \Delta y$, Eq. 20 becomes

$$hij = \frac{1}{2(1+\alpha)}(\alpha h_{i+1j} + \alpha h_{i-1j} + h_{ij+1} + h_{ij-1}) \quad (21)$$

Where $\alpha = \frac{kx}{ky}$. when $\Delta x = \Delta y$ and kx = ky(α=1) Eq. 20 becomes

$$h_{i.j} = ¼\ (h_{i+i.j} + h_{i+1.j} + h_{ij+1} + h_{i.j-1}) \quad (22)$$

The first order differential is approximated by introducing a Fictitious node, out-side the seepage domain (see Fig. 6). Using Eq.18 at node i,j we obtain

$$\frac{dh}{dy}hi_{j+1} - h_{ij-1} = 0 \quad (23)$$

Therefore, hi, j+1. The value of total heed at the fictitious node I, j+1 is eliminated by combining Eqs. (22) and (24)

$$\text{hi,j} = \frac{1}{4(h_{i,j+1} + h_{i,j-1} - 2_{i,j-1})} \quad (24)$$

In summary, for a horizontal impervious boundary, it is not necessary to define Fictitious nodes, however it is necessary to replace Eqs. (22) and (24).

The coefficient 2 in Eq. (24) applies to the internal nodes, not to the nodes on the boundary. Thus Eq. (24) may easily be generalized to a vertical boundary. Figure 6 gives additional relation for the total head at grid points on inclined boundaries and at various types of corner boundaries. The sum of the coefficients is equal to 1.

Then the total head at the grid points may be found by using either direct method or an iterative method.

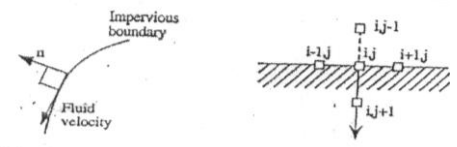

Fig. 3.6: Impervious boundary conditions.

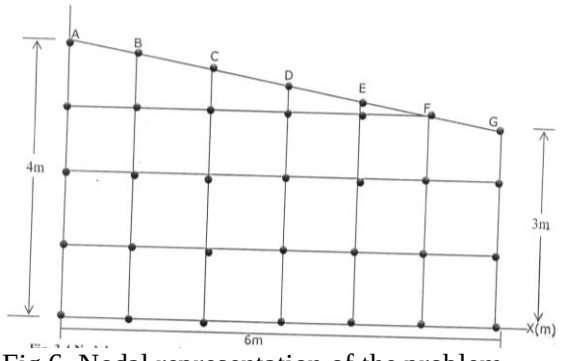

Fig.6. Nodal representation of the problem.

The given problem represented by cells, AI, A2 ... respectively. The specified values of h are entered in cells *AI*, Bl, *Cl*, Dl, El, Fl, Gl, *A2*, D2, *C2*, D2, E2, F2 etc. The relaxation solution gradually converges toward the exact solution within hundred iterations. The iterative calculations are activated by options calculation and by clicking on the iteration box.

3.4. Solution of Schaffernak and Van Herson

The first approximate method that takes cognizance of the development of the surface of seepage at the down stream slope of the dam was proposed independently in 1916 by Schaffernak and Van Herson. Considering an earth dam on an impervious base with no tail water applying equation for discharge

$$q = -ky\frac{dy}{dx} \quad (25)$$

$$q = ky\frac{dy}{dx} = ka\sin\alpha\tan\alpha \quad (26)$$

where a is the length of the surface of seepage. To determine a, we have from the equation above

$$\int_{a\sin\alpha}^{h} ydy = a\sin\alpha\tan\alpha\int_{a\cos}^{d} dx \quad (27)$$

which after integration yields

$$\alpha = \frac{d}{\cos\alpha} - \sqrt{\left(\frac{d^2}{\cos^2\alpha}\right) - \left(\frac{h^2}{\sin^2\alpha}\right)} \quad (28)$$

Substituting a in Eq. 26 the seepage through the dam is obtained. The equation of the free surface is given by

$$y(x) = \sqrt{(2ax\sin\alpha\tan\alpha - a^2\sin^2\alpha} \text{ (Harr, 1960)} \quad (29)$$

3.5 L.Casagrande's solution

Taking exception to Dupuits second assumption that the hydraulic gradient is equal to the slope dy/dx of the free surface. L. Casagrande analyzed the same problem as Schaffernak and Van iterson with' the hydraulic gradient equal to dy/ds, where equation along the free surface. Hence equation for Casagrande's method is

$$q = -ky\frac{dy}{ds} \quad (30)$$

Applying Eq.30 at AB (Fig.5) we have, for the quantity of seepage,

$q = ka\sin^2 a$

Equating the right sides of Eqs 30 and 31 and setting the limits of integrating, we obtain

$$\int_{a\sin\alpha}^{s} ydy = a\sin^2 a\int_{0}^{s-a} ds \quad (32)$$

The equation yields

$$a = s - \sqrt{s^2 - \frac{h^2}{\sin^2 a}} \quad (33)$$

which can be substituted in Eq. 31 to obtain the seepage

The following equation were used to Casagrande to calculate the phreatic surface.

$$d = \frac{h2 - y_0^2}{2y_o}$$

where $y_o = \sqrt{h^2 + d^2 - d}$

4. Results and discusssion

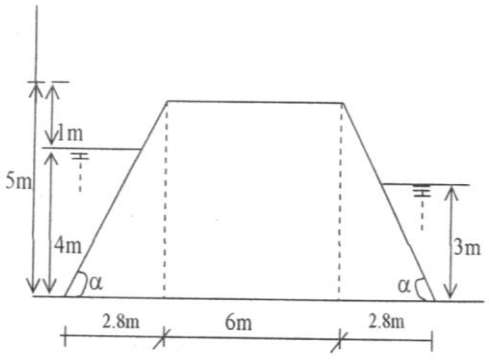

Fig. 7. Dam Specification.
Height of dam = 5m
Width of dam = 11.6m
Height of water (up stream) = 4m
Down stream = 3m
$\alpha = 29^o$

From the dam with specification shown in Fig. 7 above the following results were obtained. Applying the relvant equations and/or programmes stated in chapter three to the sections of the dam shown in Fig. 7. The following results were obtained as tabulated below.

Table 1
Summary of the hydraulic head calculated from finite element, finite difference, Schaffernak's and L. Casagrande's methods

X(m)	h(m) SChaffemaks	h(m) L.Casagrande	h(m) Finite Element	h(m) Finite difference
0	4.00	4.00	4.00	4.00
1	3.84	3.87	3.87	3.88
2	3.66	3.71	3.72	3.73
3	3.49	3.55	3.57	3.56
4	3.30	3.39	3.40	3.42
5	3.10	3.21	3.22	3.22
6	2.90	3.03	3.04	3.04

q(schaffermak)= $7x10^8 m/s^2$
q(Casagrande) = 6.9×10^2 m/s^2
q(Finite Element) = 6.2×10^{-8} m/s^2
q(Finite difference) = 6.2×10^{-4} m/ (34)

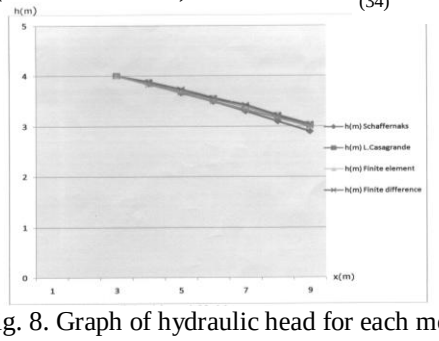

Fig. 8. Graph of hydraulic head for each model.

4. **Discussion**

In terms of the hydraulic they have similar heads at the phreatic surface (see fig. 8). Furthermore, from the results obtained Casagrande's method, Finite element and Finite difference method support the existence of seepage face; with Finite element method and Finite difference method giving a seepage face of 0.4m whereas L. Casagrande method records a seepage face 0.3m. Not minding that finite element approximations to this problem assume that the Dupuits assumption hold and therefore no seepage face exists, it can be seen that the results obtained by finite element using six-node triangular element approximation suggest the presence of seepage face. In contrast, the result obtained from Schaffernak's method gives a negative seepage face thereby supporting Casagrande's argument that seepage start at 0.3Δ. The seepage flow calculated using numerical methods (Finite element and finite difference methods) are the same. It is also expected that when the mesh size decreases, the accuracy of result increases as well. Moreover, decreasing the size of mesh will yield more meshes thereby making the computation tasking. As can be seen from the graph that the five different methods yielded almost similar result with deviation from flow net technique. The reason is that the problem is not a complicated one. Even within the numerical methods there is likely to be a marked difference between Finite difference method and Finite element method in complicated cases.

5. Conclusion

In the case of homogenous, isotropic and steady state seepage flow analytical and graphical method is recommended since they are simple and straight-forward to apply but in the case of heterogeneous and transient seepage flow, numerical method preferably finite element which can adapt to any shape of cell or mesh is recommended. It is not advisable to use analytical methods in this case because in their derivations; homogenous, isotropic and steady state seepage were assumed.

6. **Recommendation**

In case of finite element method, a finer mesh could be generated to increased accuracy, possibly through the use of finer element mesh generator as opposed by generating the mesh by hand as was done in this paper while in finite difference method, matrix method can be used in place of spreadsheet iterative method. Future work on this model could involve the consideration f the anisotropic case as well as allowing precipitation and evaporation. Different domain shapes could be considered as well as extending the model to consider flow in three dimensions.

References

Agunwamba, J.C., 2007. Engineering Mathematical Analysis. De-Adroit Innovation, Enugu.

Bardet, J.P., Tobita, T., 2002. Motion of water under dams. In proceeding of the 1st Congress on large dam, Stockholm, pages 179-192.

Blight, W.G., 1915. Dams and weirs. Journal of American Technical Society, Chicago, 5, 20-25.

Bouwer, H., 1962. Groundwater Hydrology. McGraw Hill, New York.

Brahma, S.P., Harr, M.E., 1962. Development of the free surface in a homogenous earth dam. Journal of Geotechnical Engineering, 12(4),4-6.

Bryan, R.B., Jones, I.A., 1997. Finite Element Techniques for Fluid Flow. Newness Butterworths, Boston.

Casagrande, A., 1937. Seepage through dams. Journal of New England Water Works Association, 4(2), 6/1-6/15.

Chandrapatha, T.R., Belegundu, A.D., 2007. Introduction to Finite Element in Engineering. Prentice-Hill, Inc., New Jersey.
Chen, R.T., Li, C.T., 2008. On the solution of transient free surface flow problems in porous media by the finite element method. Journal of Hydrology, 20, 49.

Civini, C., Gioda, G., 1990. A non-linear programming analysis of unconfined steady-state seepage. Int.J. Num. and Meth. Geomech., 3(1), 13-22.

Courant, R., 1943. Supersonic flow shock waves. Interscience Publishers Inc., New York.

Darcy, H., 1956. Less Fountaines Publiques dela ville de Di jon, Paris.

Dupuits, 1., 1863. Etudes Theoriques et pratiques sur Ie mourevement des eaux dems les camaux de Courverts et a travers les terrains permeables, Paris.

Freezer, R.A., Cherry, J.A., 1979. Groundwater. Prentice Hall, Englewood Cliffs, N.J., P. 174-178.

Gillseppe, 2007. The Finite-element method, part 1: R-L Courant: Historical Corner.

Greenstadt, 1959. Finite element free surface seepage analysis without mesh iteration. International Analytical Methods Geomechanics, pp. 3.

Harr, M.E., 1962. Groundwater and Seepage. McGraw-Hill, New York.

Haung, T.K., 1994. Stability analysis of an earth dam under steady state seepage. Computers and Structures, 58(6), 1075-1082.

Hill, M.C., 1990. Solving groundwater flow problems by conjugate-gradient methods and strong implicit procedure. Water Resources Research, 26(9), 1961-1969.

Hinklmann, R., 2005. Efficient Numerical Methods and information. Processing Techniques for Modeling Hydro-and Environmental Systems. Springer-Verlag, 317p.

Ike, C.C., 2006. Principles of Soil Mechanics. De-Adroit Innovation, Enugu.

Iterson, F.K., 1917. Eenige theoretische Beshouwingen over kwel, De Ingenieur.

Jie, Y.X., Jie, G.Z., Li, G. X., 2004. Seepage analysis based on boundary fitted coordinate transformation method. Computers and Geotechnics, 31(4), 275-281.

Leontiev, A., Haucasi, W., 2001. Mathematical programming approach for unconfined seepage flow problem. Engineering Analysis with Boundary Elements, 25(1), 49- 50.

Li, G. X., Ge, J.H., Jie, Y. X., 2003. Free surface seepage analysis based on the element free method. Mechanic Research Communications, 3(1),9.

Malkawi, A.H., Sheriadeh, M., 2000. Evaluation and rehabilitation of dam seepage problems. A case study: ` frein dam. Engineering Geology, 56(3-4), 335-336.

Newmann, S.P., Witherspoon, P.A., 1970. Finite element method of analyzing steady seepage with a free surface. Water Resources, 6(3), 889-897.

Numerov, 1942. Numerical solution of steady -state porous flow free boundary problems. Numer. Math., 31, 70 - 73.

Oka, F.Y., Kato, A. N., 1994. An analysis of seepage failure using an elastoplastic constitute equation and its application, Journal of Geotechnical Engineering. Proc. of JSCE, 493: III-27, pp 1-3.

Pavlosky, N. N., 1931. Motion of water under dams. In proceeding of the 1st Congress on large Dams, Stockholm, pp 179-192.

Pedro, J.O., Mascarenhas, Silva, H.S., 1993. Stability analysis of an earthdam under steady state seepage. Computers and Stmctures, 58(6), 1075-1082.

Polubarinova-Kochina, P., 1962. Theory of Ground Water Movement. Princeton University Press, Princeton, N.J.

Prighetti, G., Harrop – Williams, K., 2005. Finite element analysis of random soil media. Journal of Geotechnical Engineering, ASCE, Vol. 114, GII, PP. 1-10.

Schaffernak, F., 1917. Dbar die Standsicherheit durchlaessinger geschutter Darnme, Allgem Bauzeitung.

Sellmeijer, J.B., 1998. Ageing of concrete dam foundation. Eurock '93. Safety and environmental issue in rock engineering. Proc. Symposium, Losboa, 2, pp 1084.
Sellmeiger, J.B., Koender, M.A., 1991. A mathematical model for pipping. Applied Maths Modelling, 15(6), 646-651.

Serafin, J.L., 2009. Safety Dams. A.A. Balkena Boston.

Sülli, E., 2008.
http://hweb.comlab.ox.ac.uk/ond/work/endre.suli/Femi.ps(lecturenote).

Thompson, E.G., 2005. Introduction to the Finite Element Method: Theory, Programming and Application. Wiley, New York: USA.

Uromeily, A., Berzegari, G., 2007. Evaluation and treatment of seepage problem at ChaparAbad Dam Iran. Engineering Geology, 91(2-4), 219.

Wang, H.F., Anderson, M.P., 1982. Introduction to Groundwater Modeling: Finite Difference and Finite Element Methods. W.H. Freeman and Company, San Francisco.

Wang, J., 1963. A Theoretical analysis of groundwater flow in small drainage basins. Journal of Geophysical Research, 68(18), 4795-4812.

Zhang, 1.Z., Xu, Q.J., Cheng, Z.Y., 2001. Seepage analysis based on the unified saturated soil theory. Mechanisms Research Communications, 28(1), 107 - 110.

Zienkiewics, O., Cheung, Y.K., 1965. The solution of anistropic seepage by finite elements; 1. Bng. Mech. Div, 92(1), 111-120.