JEAS

Journal of Engineering and Applied Sciences, Volume 17, Number 2, December 2020, 188-195

JOURNAL OF ENGINEERING
AND
APPLIED SCIENCES

# Design and Implementation of an AC Power Generator using DC Motor

Abdulrahman O. Yusuf[1*], Kehinde R. Kamil[2], Lukman S. Ayinla[3], Usman A. Usman[4], and Hamed K. Gbigbadua[5]

[1,3]Department of Computer Engineering, University of Ilorin, Ilorin, Nigeria

[2]Science, Laboratory and Technology Research Department, Nigerian Building and Road Research Institute, FCT Abuja, Nigeria

[4,5]Department of Electrical/Electronics Engineering, Federal University of Technology, Minna, Nigeria

Corresponding Author - E-mail: yusuf.oa@unilorin.edu.ng

**Abstract**

A reliable and efficient supply of electricity is an unavoidable prerequisite to the development of any nation since it is the major power source that drives most technologies. This paper describes the design and implementation of an AC power generator that generates electrical energy from an alternator using DC motor as the prime mover. The alternator armature shaft was coupled directly with the DC motor, which was powered by a high current rechargeable battery. The DC motor rotates the armature of the alternator in the field coil at high speed when powered. This results in two a.c output voltages of 12V and 220V from the alternator. The 12V output was feedback to recharge the battery by the means of a diode while the 220V output was used to drive any a.c load connected to the generator. The 12V output provides constant recharging of the battery as the DC motor consumes energy from the rechargeable battery. The system was also designed with control and display circuitries for automatic switching ON/OFF of the generator and to monitor the voltage output from the grid and generator to select the best output to the load respectively. It also incorporates a buzzer to give an alarm when a fault is detected and to isolate the load.

**Keywords:**Alternator; DC Motor; Electricity; Electromagnetic Induction; Magnetic Flux; Prime Mover; Rechargeable Battery.

## 1. Introduction

Electricity is the major power source that drives most technologies hence it is demanded in large capacity. A regular and adequate supply of electricity is an unavoidable prerequisite to any nation's development. Any nation whose energy need is epileptic in supply prolongs her development (Onochie, Egware, & Eyakwanor, 2015). Presently in Nigeria, power generating is mainly from thermal plants (about 61%) while hydropower generating is about 31%. Most of the generating assets in the public power sector are old. Lack of timely routine maintenance had caused significant deterioration in plant output and is a key explanatory factor in the lingering electric power crisis (Ajav & Adewumi, 2014). According to industry watchers, more than two decades of poor planning and underinvestment had left a huge supply deficit. There is no new infrastructure in over a decade despite rapid population growth and rising demand for power (Nigeria Power Sector Report, 2008). The process of generating electricity is a key factor in the depletion of the ozone layer, noise, and environmental pollution (Ajav, 2012). The challenges associated with conventional energy sources more especially hydroelectric power supply is the need for flowing river with high potential water head, large landmass, in addition to the adverse effect on the aquatic habitat and also settlements close to the site during a flood or natural disaster.

Recently, an increase in energy demand and limited energy sources in the world caused the researchers to make an effort to provide new and renewable energy sources for the usage economically and safely (Adewumi, 2016). Besides being clean and of low running costs, renewable energy possesses the privilege of abundance and can be used wherever available (Ibrahim & Serag, 2011). A common disadvantage with renewable energy sources is that it is difficult to produce large quantities of electricity that may be required and the cost of initiating them is high.
Other evolutionary trends that lead to generating energy from non-renewable sources like coal, fuel, gas, nuclear, and so on, have the benefit of generating energy of large capacity, at low cost. However, the residual from the

generation process is highly toxic which depletes the ozone layer, pollutes the habitat, and endangers lives (Ajav & Adewumi, 2014). The most common way of generating electricity from a non-renewable energy source which is used as a backup in both residential and industrial areas is the fuel or diesel generator. The fuel or diesel generator operates by combusting hydrocarbon fuel to exert a rotational force to the alternator axis which produces torque from the mechanical power supplied from it (Theraja & Theraja, 2007). It requires less capital to set up the system compared to the grid system and it is also portable, which gives it the benefit to be used in remote areas. Nevertheless, the running cost of the generator is a challenge to the user in the long run and it causes noise pollution to the immediate environment. Also, gases like carbon monoxide (CO) released from the combustion of the hydrocarbon fuel are hazardous to human health, poses threat to the environment, and contribute to the depletion of the ozone layer (Abatan, Adewale, & Alabi, 2013). This motivated the use of a DC motor as a prime mover to the alternator to mitigate some of these effects.

Otulana et al (2012) developed a fuelless generator by using locally sourced materials with driving mechanisms of 1hp DC motor, powered by a 12V battery, which spines the 0.95KW alternator to produce electricity while recharging the battery using a diode with an output of 1KVA. Adewumi (2016) focused on the emergence of the self-induced engine as a possible alternative for isolated power generation from renewable energy sources because of its low cost, low maintenance cost, and reliability. The constructional features include an alternator, DC motor, 12V 100Ah battery, AVR panel, and charging panel. The power transmission was done by the direct coupling method. The evaluation of the self-induced generator was done by loading it with varying loads that range from 0 to 2000W bulbs for a time of 300seconds for each load. The research revealed that the self-induced power generating set must make use of new direct current motor and alternator for future study for reliability and better performance of the system. Dipali, Shelke & Shital (2017) construct a simple and efficient means of generating electrical energy with readily and easily available materials. The authors revealed that the system can be built to any capacity, depending on the capacity of the intending load, and does not require any mechanical service or maintenance.

## 2.0 Material and methods

### 2.1 Material

The essential components used in the design are Rechargeable Battery, DC Motor, Alternator, Automatic Voltage Regulator (AVR), Coupler, Connecting Cables, Digital Multi-Meter, and other basic electronic components that constitute the Control and Display Circuits.

### 2.1 Methodology

The generator was built by direct coupling of a 2KVA alternator with 1hp DC motor that acts as a prime mover to the synchronous generator. The DC motor was powered by an external rechargeable DC voltage battery for separate excitation of both the field coil and the rotor winding of the DC motor at the first phase. The alternator works on the principle of Faraday's Laws of electromagnetic induction to generate an induced electromotive force (e.m.f) whenever the magnetic flux linked with a circuit changes (Singh, Murthy, & Gupta, 2006) as cited by (Rajaendra K. Prasad et al, 2012). The alternator rotor was the conductor placed in the magnetic field of the stator which was linked together by magnetic flux, and the rotational force was applied to the rotor by the prime mover.
Mathematically,

$$Induced\ e.m.f = \frac{N\emptyset_2 - N\emptyset_1}{t} \quad (1)$$

Where,
$\emptyset_1$ =Initial flux linkages,
$\emptyset_2$ = Final flux linkages,
$N$ = Coil Number of turns,
$t$ = Time
Rearranging eq.(1) in differential form, we have:

$$e = \frac{d^2}{dt^2}(-N\emptyset) = -N\frac{d^2\emptyset}{dt^2} \quad (2)$$

The DC motor was designed based on the related principle of electromagnetic induction but instead of it generating an induced e.m.f, a DC voltage was supplied to the rotor winding in the field coil (stator winding) which was linked together through the magnetic flux and causes rotational motion of the rotor winding in the field coil. During the DC motor operation, a back *e.m.f*($e_b$) was experienced; an induced voltage in the coil of DC motor due to the generator effect. The back *e.m.f*as quantified in eq.(3) opposes the external applied voltage to the coil; as a result, it tends to reduce the motor current.

$$e_b = \frac{\emptyset \times Z \times N \times p}{C \times 60} \quad (3)$$

Where,
C = Number of parallel paths of conductor in armature,
Z = Number of conductors in armature,
N = Speed of shaft rotation in r.p.m,
Φ = Flux Density,
p = Number of poles.
For a Lap Wound DC motor, C = p
Hence,

$$e_b = \frac{\emptyset \times Z \times N}{60} \quad (4)$$

$$e_b \; \alpha \; w \quad (5)$$

$$e_b = k_v w \quad (6)$$

Where,

$$w = \frac{2\pi \times N}{60} \quad (7)$$

$w$ = Angular speed and $k_v$ = Voltage Constant
The armature voltage V consists of two parts; Back *e.m.f* ($e_b$), and the voltage drop across armature resistance ($i_a R$).

$$V = i_a R + e_b \quad (8)$$

Multiplying eq. (8) by $i_a R$

$$V i_a = {i_a}^2 R + e_b i_a \quad (9)$$

Where,
$V i_a$ = Electric power supplied to the armature,
${i_a}^2 R$ = Power loss due to armature resistance,
$e_b i_a$ = Mechanical Power (P) developed by the DC motor.

$$Torque\ (T) = \frac{p}{w} = \frac{Mechanical\ \ Power}{Angular\ \ Speed} \quad (10)$$

$$P = e_b i_a \quad (11)$$

Substituting for $w$from eq. (7)

$$T = \frac{e_b \times i_a \times 60}{2\pi \times N} \quad (12)$$

Therefore, substitute $e_b$ from eq. (4)in eq. (12)

$$T = \frac{\emptyset \times Z \times N \times i_a}{2\pi \times N} \quad (13)$$

However, $T \propto i_a$at constant speed

$$T = k_t i_a \quad (14)$$

Where, $k_t$= Torque Constant
The effective torque which overcomes first rotational torque at current $i_a$is:

$$T = k_t i_a - T_f \quad (15)$$

$$i_a = \frac{T + T_f}{k_t} \quad (16)$$

Substituting eq. (16) into eq. (8)

$$V = \frac{T + T_f}{k_t} R + e_b \quad (17)$$

Substituting eq. (6) into eq. (17)

$$V = \frac{T + T_f}{k_t} R + k_v w \quad (18)$$

$$k_v w = V - \frac{T + T_f}{k_t} R \quad (19)$$

$$w = \frac{V}{k_v} - \frac{T + T_f}{k_v k_t} R \quad (20)$$

$$w = \frac{(k_t V) - (T + T_f) R}{k_t \times k_v} \quad (21)$$

$$w = \frac{(k_t V) - TR - RT_f}{k_t k_v} \quad (22)$$

Practically,$T_f \approx 0$

$$w = \frac{(k_t V) - TR}{k_t k_v} \quad (23)$$

Equation 25 describes the speed (angular) of a DC motor based on the power supplied to it. The electric power supplied to the armature was evaluated from eq. (9) to calculate the mechanical power developed by the DC motor with the power loss to the armature resistance. However, the battery used as the source of power to the DC motor will be recharged back automatically as it is being used simultaneously just like the electrical system of an automobile system. Eq. 26, 27, 28 and 29 were used to determine the design specification of the battery used.

$$P = IV \quad (24)$$

Taking DC motor of 12V and 1hp as consideration to calculate the current rating of the battery, V = 12V, P = 1hp and 1hp = 0.7457 kW= 745.7W

$$P = IV, I = \frac{P}{V} \quad (25)$$

$$W = VA \times cos\emptyset \quad (26)$$

$$\therefore VA = \frac{W}{cos\emptyset} \quad (27)$$

Where $cos\emptyset$ is the power factor = 0.8,

Hence $VA = \frac{W}{cos\emptyset} = \frac{745.7}{0.8} = 932.125VA = 0.932KVA$

Substituting the value of$VA$ to eq. (25)

$I = \frac{P}{V} = \frac{932.125}{12} = 77.68A$

The current rating of the battery used is 78A and the voltage rating is 12V with 1hp power, based on the DC motor specifications.

### 2.1 Control Circuit

Control circuit which automatically switches ON or OFF the system when used as back up to the grid system was included within the generator system. This was achieved by using the Atmega8L microcontroller which samples the voltage level of the voltage divider circuit and executes analogue to digital conversion. The sampled signal was used to toggle the input signal of the transistor, display information about the generator on the Liquid Crystal Display (LCD), and also indicate the present operating state on the Light Emitting Diode (LED). The microcontroller is programmed to switch the load to the generator when the grid is below 100V which is a situation when the grid is at low voltage or is not available. The block diagram for the whole system is shown in figure 1, the flow chart of the executed by the microcontroller to control the generator is illustrated in figure 2 while the overall circuit diagram of the control circuit is shown in figure 3.

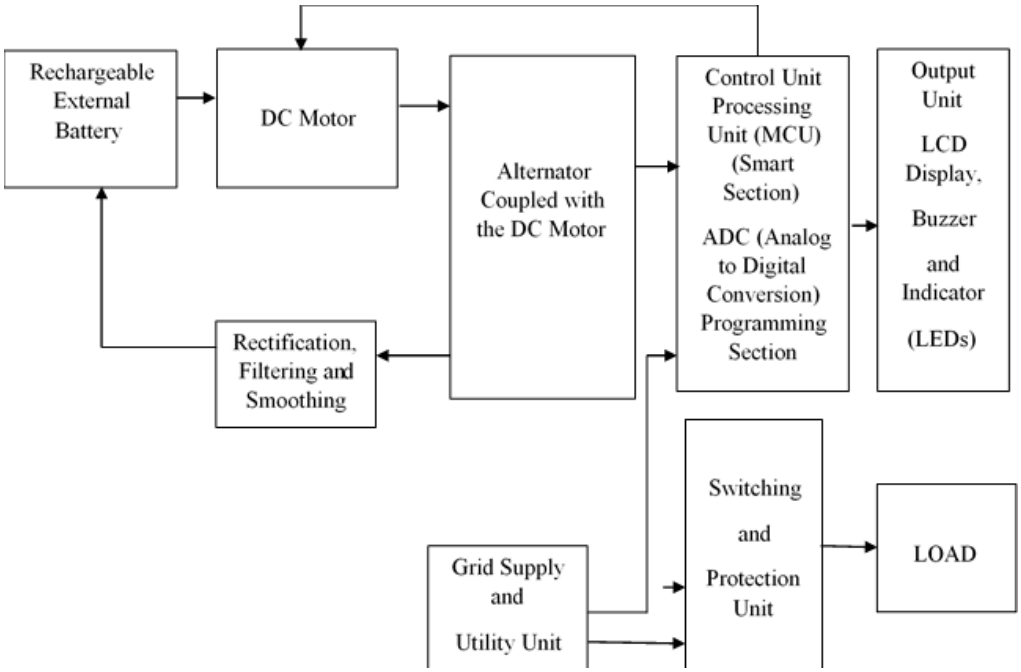


**Figure 1: Block Diagram of the AC Power Generator System**

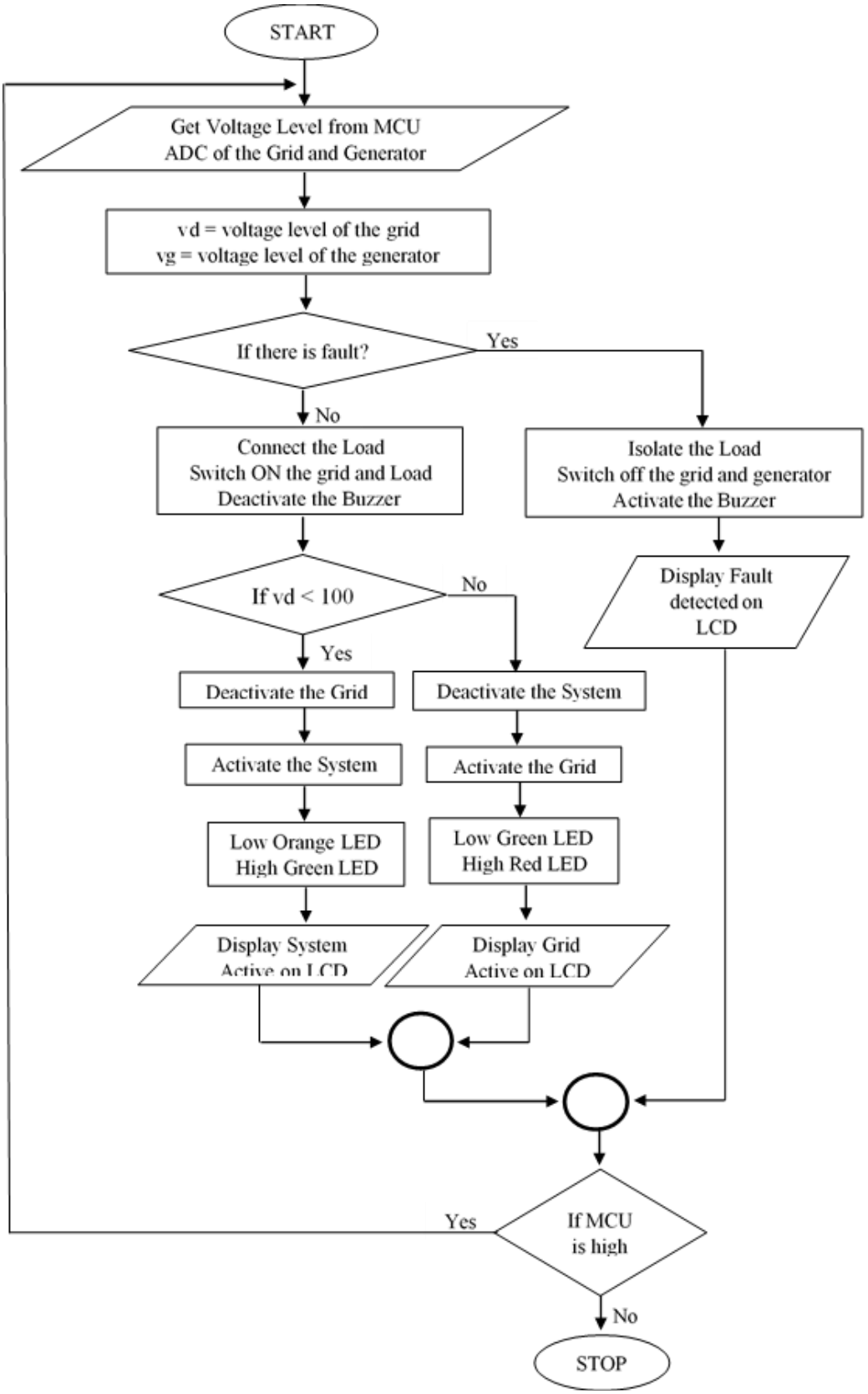


**Figure 2: Flow chart executed by the microcontroller for the system operation**

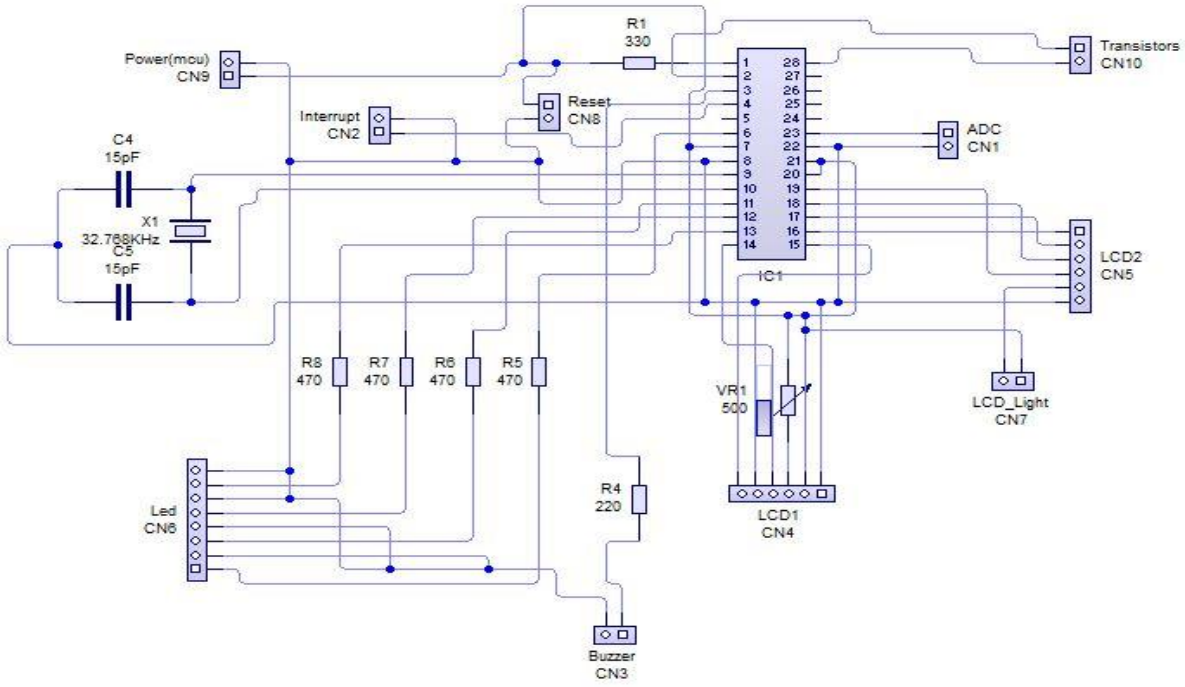


**Figure 3: Circuit Diagram of the Control Unit**

### 3.0 Results and Discussions

The multi-meter was switched to ac readings for measuring high voltage and the test was carried out on the generator system under different loads and readings were obtained from the circuit breaker output as presented in table 1.

**Table 1: Test results from the Generator under different Loads**

| S/No | Components and Ratings | Quantity | Connected Load (Watt) | Connected Load (VA) | Current (Amps) | Voltage Output (Volts) |
|---|---|---|---|---|---|---|
| **1** | Incandescent Lamp (60W) | 2 | 120 | 150 | 0.6890 | 218 |
| **2** | Fan (100W) | 1 | 100 | 125 | 0.5787 | 218 |
| **3** | Energy Saver Bulb (40W) | 2 | 80 | 100 | 0.4592 | 218 |

The multi-meter was also used to measure the power input and output of various units. The voltage output from different components of the control circuit was obtained and presented in table 2.

**Table 2: Test results on the Power Supply Unit from various components**

| Components | Voltage Outputs (V) |
|---|---|
| Transformer | 24.00 |
| Rectifier | 20.80 |
| 7812 Voltage Regulator | 11.78 |
| 7805 Voltage Regulator | 4.86 |
| Microcontroller | 4.84 |
| 12V Relay | 11.58 |
| LED Connected in shunt | 1.95 |
| Buzzer | 4.75 |
| LCD (Liquid Crystal Display) | 4.76 |
| 24V Relay | 22.65 |

The overall system as shown in fig. 3 was tested and readings were taken, that meet the design specifications and functionalities of each of the components used in the circuit design. From table 2, the test was carried out at various points in the circuit. The result obtained from the load shows that the system can deliver about 1.6kW power output which can power two standard households. When the generator was powered on, the first circuit breaker switches the control circuit which was controlled automatically to power the load, and the system can be switched off with the second circuit breaker. The system mode and status was displayed on the LCD, the indicator specifies the current state, while the buzzer produces an alarm whenever there is a fault which was indicated by the LEDs and displayed on the LCD. Based on the result from table 1, an increase in the load connected produces an increase in the current drawn from the generator.



**Figure 3: AC Power Generator System**

**4.0. Conclusion**

AC power generator was designed and implemented to generate clean and environmental friendly electrical energy using DC motor as the prime mover to the alternator. The system results in two output voltage of 12V and 220V respectively. The embedded control circuit permits automatic switching to and from the national grid while the alarm and display circuit is useful for fault detection and mode display respectively. The alternator has diodes that give polarity to the batteries and capacitor that store electrical charges and smoothen the electricity supplied by the alternator respectively. The application of the system to generate electricity is restricted to the capacity of both the D.C. motor and the alternator. The dc motor capacity must exceed that of the alternator coupled to the dc motor to produce maximum alternator output capacity. This implies that the availability of DC motor and alternator of large capacity gives the system its potentials to solve the problem of the generation and distribution of electricity that is usually inadequate.

**References**

Abatan, O., Adewale, A., & Alabi, A. 2013. Constant Electricity Generation From Self-Charging Inverter. *IJETAE ISSN*, 2250-2459.

Adewumi, I. 2016. Fuelless Generator: Comparison of Two Prototype Design. International journal of Energy and Environmental Research Vol. 4, No.3, pp.37- 44.

Adewumi, I. 2016. Development of 2.5 kva Self-Induced Power Generating Set, Sci-Afric Journal of Scientific Issues, Research and Essays Vol. 4(1), Pp. 890-894, available at http://www.sci-africpublishers.org.

Ajav, E. 2012. Agricultural Pollution and Control. *Being an M. Sc lecture note from Department of Agricultural and Environmental Engineering, Faculty of Technology, University of Ibadan, Nigeria*.

Ajav, E., & Adewumi, I. 2014. *Fuelless generating set: Design, construction & performance evaluation.* Paper presented at the 3rd International Conference Proceedings on Engineering and Technology Research at LadokeAkintola University of Technology, Ogbomosho.(ISBN: 978-2902-58-6)(3).

Dipali S., Rutuja S., Shital M., 2017. "Fuel less Generator: Review" International Journal for Research in Applied Science & Engineering Technology (IJRASET) ISSN: 2321-9653 Volume 5 Issue VI, pg 1375-1378.

Ibrahim, H. E., & Serag, M. F. 2011. Analysis of self excited induction generator using particle swarm optimization. *World Academy of Science, Engineering and Technolgy, 57*, 236-240.

Onochie, U., Egware, H., &Eyakwanor, T. 2015. The Nigeria Electric Power sector (opportunities and challenges). *Journal of Multidisciplinary Engineering Science and Technology, 2*(4), 494-502.

Otulana J.O, Akinwunmi A.A, Awoyemi J.A, Adeleke M.B, EfunboteOrelaja M.I 2015. Construction of a Fuel less Generator, International Journal of Recent Research in Civil and Mechanical Engineering, Vol. 2, Issue 1, pp:(285-289).

Prasad, K. R., Reddy, S. R. K., Subrahmanyam, J. B. V., Sahoo, P. K., & Shashidhar, C. 2012. Modeling and Simulation of an Asynchronous Generator with AC/DC/AC Converter Fed RLC Series Circuit in an Isolated Power Generation System. *International Journal of Engineering and Technology Volute*, *2*. No. 4

Singh, B., Murthy, S., & Gupta, S. 2006. Analysis and design of electronic load controller for self-excited induction generators. *IEEE transactions on energy conversion*, *21*(1), 285-293.

Theraja, B., &Theraja, A. 2007. A Textbook of Electrical Technology 24th Edition, S. *Chand and Company Ltd New Delhi–110055*.