UJEAS

UNIZIK JOURNAL OF ENGINEERING AND APPLIED SCIENCES

UNIZIK Journal of Engineering and Applied Sciences 6(2), June (2026), 3550-3558
Journal homepage: https://journals.unizik.edu.ng/index.php/ujeas
PRINT ISSN: 2992-4383 || ONLINE ISSN: 2992-4391

Design, implementation and performance evaluation of a low cost AC-DC converter trainer for engineering education

Kingsley Onyeka Odo[1*], Charles Nwakanma Akwuruoha[1], Yerima Omosun [1] and Nnaemeka Chijioke Onyenagbagha[2]

[1]Department of Electrical and Electronic Engineering, Michael Okpara University of Agriculture, Umudike, Abia State

[2]Department of Electrical and Electronic Engineering, Federal Polytechnic Kaltungo, Gombe State

[*]Corresponding Author's E-mail: odo.kingsley@mouau.edu.ng

Abstract

This study presents the design, implementation, and performance evaluation of a low-cost, modular AC–DC converter trainer developed to enhance practical instruction in electrical power conversion. In contrast to conventional AC–DC trainer systems, which are often expensive, rigid, and limited in measurement accessibility, the proposed design incorporates a flexible architecture with multiple regulated outputs and accessible test points for real-time observation of circuit behaviour. The system converted a 220–240 V AC mains supply into regulated DC outputs through a step-down transformer, full-wave bridge rectifier, filter capacitor network, and linear voltage regulators (7805, 7812, and LM317). The design process was supported by detailed analytical modeling, including transformer rating selection, rectifier peak voltage estimation, ripple minimization, capacitor sizing, and regulator thermal considerations. The key contributions of this work included the development of a cost-optimized trainer suitable for resource-constrained laboratories, the integration of fixed (5 V and 12 V) and adjustable (1.3–19 V) outputs within a single platform and the provision of enhanced measurement nodes to improve pedagogical effectiveness. Experimental results under no-load and load conditions indicated an unregulated DC output of 15.92 V, ripple voltage below 0.5 V, and stable regulated outputs across all channels. The system achieved an efficiency range of 75% – 78%, which is comparable to or slightly higher than the 70% – 75% typically reported for existing linear AC–DC trainer designs. These results demonstrate that the proposed trainer meets standard performance requirements while offering improved functionality, affordability, and instructional versatility. The system therefore provided a novel and relevant contribution to engineering education, particularly in technical institutions where cost, accessibility, and hands-on learning are critical considerations.

Keywords: Voltage regulation, bridge rectifier, peak voltage, efficiency, filter capacitor

1. Introduction

Electrical and electronic systems underpin modern industrial, domestic, and technological applications, with most requiring direct current (DC) despite power being supplied as alternating current (AC) from national grids. Consequently, AC–DC conversion (rectification) is a fundamental concept in electrical and electronic engineering education (Mohan et al., 2020). This process typically involves four key stages: transformation, rectification, filtering, and regulation, each of which directly influences performance parameters such as efficiency, ripple content, and voltage stability (Rashid, 2021). A clear understanding of these stages is therefore essential for both academic learning and practical engineering applications. Despite this importance, a persistent disconnect exists between theoretical instruction and practical competence in power electronics education. Studies have shown that many students lack the ability to interpret waveforms, analyze circuit performance under varying load conditions, or troubleshoot basic power conversion systems (Thompson et al., 2024; Daud et al., 2016). This challenge is particularly pronounced in developing countries, where laboratory facilities are often limited, outdated, or prohibitively expensive to maintain or replace (Terwe, 2023). As a result, students graduate with insufficient hands-on experience, reducing their preparedness for real-world engineering tasks.

Educational trainer kits have been widely recognized as effective tools for bridging this theory-practice gap by enabling hands-on experimentation, real-time measurement, and visualization of electrical behavior. Empirical evidence suggests that students exposed to hardware-based training platforms demonstrate improved conceptual understanding and problem-solving skills compared to those relying solely on theoretical instruction (Obasi and Nwankwo, 2022; Ogbuka and Okeke, 2021). However, most existing AC–DC trainer designs emphasize basic functionality rather than instructional flexibility. They often lack modularity, provide limited access to measurement points, and do not adequately support comparative analysis of different circuit stages such as rectification, filtering, and regulation (Erickson and Maksimović, 2019; Hambley, 2020).

Therefore, the critical research gap lies in the absence of an affordable, modular, and pedagogically optimized AC–DC converter trainer that enables multi-output regulation, circuit reconfigurability, and accessible measurement of intermediate signals for enhanced learning. Addressing this gap is essential to improving experiential learning outcomes, particularly in resource-constrained academic environments. In response, this study develops a cost-effective and modular AC–DC converter trainer designed to enhance hands-on learning, facilitate waveform analysis, and support practical skill acquisition in power electronics. By integrating multiple output configurations and clearly accessible test points within a single platform, the proposed system aims to provide a more effective, flexible, and sustainable instructional tool for engineering education.

1.1 Review of related works

Several studies have investigated the design and pedagogical effectiveness of electronics trainer kits, with emphasis on improving hands-on learning in engineering education. Daud et al., (2016) developed a general-purpose electronic trainer that emphasized modularity and student interaction. While the design improved usability, it remained broad in scope**,** limiting its depth in demonstrating specific power electronics processes such as AC–DC conversion stages. Similarly, Ogbuka and Okeke, (2021) proposed a rectifier-based teaching module that enhanced student performance; however, their system primarily focused on rectification alone, with limited integration of filtering and regulation stages, thereby restricting comprehensive system-level understanding.

More recent work by Thompson et al., (2024) incorporated simulation tools alongside hardware trainers to improve conceptual understanding. Although this hybrid approach strengthens theoretical insight, it introduced additional complexity and dependency on software tools**,** which may not be feasible in resource-constrained environments. In a broader review, Terwe (2023) highlighted key design considerations such as cost, durability, and pedagogical structure, but did not present a fully integrated, application-specific trainer that simultaneously addresses affordability, modularity, and measurement accessibility. From a technical perspective, existing trainer designs often suffer from limited reconfigurability**,** inadequate test-point accessibility, and insufficient support for comparative analysis across transformation, rectification, filtering, and regulation stages (Erickson and Maksimović, 2019; Hambley, 2020). Many systems are either too generalized, focusing on multiple unrelated topics, or too narrow, addressing only a single stage of power conversion. Furthermore, a significant number of commercially available trainers are imported and expensive, making them inaccessible to institutions in developing regions.

These limitations reveal a clear gap in the literature; the absence of a low-cost, modular, and application-specific AC–DC converter trainer that integrates all key conversion stages while providing accessible measurement points for real-time analysis and experimentation**.** Existing solutions do not adequately balance cost, functionality, and pedagogical effectiveness, particularly for resource-limited educational settings. In contrast, the present study addresses these shortcomings by developing a cost-effective, modular AC–DC converter trainer that integrated transformation, rectification, filtering, and regulation within a single platform. Unlike prior designs, the proposed system emphasizes multi-output capability, enhanced measurement accessibility, and simplified circuit reconfiguration**,** thereby enabling both stage-by-stage analysis and holistic system understanding. This positions the study as a practical and pedagogically improved alternative to existing trainer designs, particularly suited for institutions with limited laboratory resources

2.0 Materials and methods

The materials required in this study include transformer (220/240 V), diodes (1N4007), capacitors (2200μF, 4700μF, 100μF, 100nF), regulators (7805, 7812, LM317), resistors of various ratings, LEDs (red and green), fuse (1 -3 A), heat sink, switch (Single Pole Single Throw (SPST), enclosure box and veroboard.

2.1 Method

2.1.1 Performance Parameters of AC–DC Converters

The performance of an AC–DC converter was evaluated using several quantitative parameters that describe its efficiency, output quality, and utilization of input power. These parameters are essential in both theoretical analysis and practical implementation of rectifier-based power supplies. In the design and implementation of an AC–DC converter trainer, understanding and measuring these performance indicators enables students to compare different rectifier configurations and evaluate real-world performance. The major performance parameters are rectification efficiency**,** ripple factor**,** form factor**,** transformer utilization factor (TUF)**,** power factor, and voltage regulation**.**

Rectification Efficiency (η)

Rectification efficiency is the ratio of DC power delivered to the load to the AC power supplied to the rectifier input. Efficiency is given by:

$$\eta = \frac{P_{DC}}{P_{AC}}\, x\, 100\ \% \quad (1)$$

where P_{DC} is the DC output power and P_{AC} is AC input power

Efficiency indicates how effectively the rectifier converts AC input power into usable DC output power.

Ripple Factor (γ)

Ripple factor measures the amount of AC component present in the rectified output relative to the DC component. The ripple factor (γ) is defined as:

$$\gamma = \frac{V_{r(rms)}}{V_{DC}} \quad (2)$$

where Vr(rms) = RMS value of the AC component, V_{DC} = Average DC output voltage. A lower ripple factor indicates smoother DC output.

Transformer Utilization Factor (TUF)

Transformer Utilization Factor measures how effectively the transformer rating is utilized.

$$TUF = \frac{P_{DC}}{Transformer\ VA\ Rating} \quad (3)$$

2.1.2 Design of the Transformer Stage

A step-down transformer reduces the 220–240 V AC mains to a lower AC level suitable for rectification.

Transformer power rating: The rating of transformer is given by;

$$P = V_s X I_s \quad (4)$$

Where P = transformer power rating, V_S = secondary voltage and I_S = expected secondary current. For a 12 V output at 2 A:

$$P = 12X2 = 24\ W$$

Therefore, a 30–50 W transformer was chosen to provide adequate safety margin.

2.1.3 Design of the Rectifier Stage

A full-wave bridge rectifier was used because it provides higher efficiency and lower ripple than a half-wave rectifier.

Peak Output Voltage of Rectifier

$$V_{pk} = V_{rms} X \sqrt{2} \quad (5)$$

For 12 V AC:

$$V_{pk} = 12X\sqrt{2} = 16.97\ V$$

DC Output Voltage (after diode drops)

Each diode drop ≈ 0.7 V (for silicon diodes). A bridge uses 2 diodes per cycle:

$$V_{DC} = V_{pk} - 2V_D \quad (6)$$

$$V_{DC} = 16.97 - 2(0.7) = 16.97 - 1.4 = 15.57\ V$$

Thus, unregulated DC ≈ 15.5–16 V.

2.1.4 Design of the Filtering Stage

A large electrolytic capacitor smooths the pulsating DC. Standard ripple voltage capacitor sizing formula for a full-wave rectifier is given by:

$V_r = \frac{I}{FC}$ (7)

where I = load current, f = ripple frequency (for full wave rectification, f = 2x50 = 100 Hz (for full-wave at 50 Hz mains), C = capacitance.

Selecting Capacitor Value

To achieve ripple voltage, $V_r = 1\ V$ at 1 A:

$C = \frac{1}{fV_r} = \frac{1}{100X1} = 0.01F$

Converting Farads to microfarads, 0.01F = 0.01 x 1000000 = 10,000 μF

C = 10,000μF

Therefore, a capacitor 4700 – 10,000μF was recommended.

2.1.5 Voltage Regulator Design

Fixed Voltage Regulators

7805 → 5 V output

7812 → 12 V output

Output equation:

$V_o = V_{req}$ (8)

A heat sink is required since regulators dissipate power:

$P = (V_{in} - V_{out})xI$ (9)

If $V_{in} = 15.5\ V\ and\ V_{out} = 5\ V\ at\ 1\ A$, the

$P = (15.5 - 5)x1 = 10.5\ W$

Thus, heat sinking is mandatory

Adjustable Regulator (LM317)

The LM317 output voltage is given by:

$V_o = 1.25\left(1 + \frac{R_2}{R_1}\right) + I_{adj}R_2$ (10)

With $R_1 = 240\ \Omega\ and\ ignoring\ I_{adj}$

$V_o = 1.25\left(1 + \frac{R_2}{240}\right)$

Adjusting R_2 gives 1.25 – 20 V regulated output.

2.1.6 Research Design

The study adopted an experimental design approach, involving the development of a functional AC–DC converter trainer based on electrical engineering principles. The system design was broken into stages, simulated, constructed on a Vero board, tested, and enclosed in a trainer case for educational use. Each stage was designed to convert a 220–240 V AC mains supply into smooth and regulated DC outputs suitable for demonstration and laboratory training.

2.1.7 System Block Diagram

The block diagram of the AC–DC converter trainer is shown in Figure 1

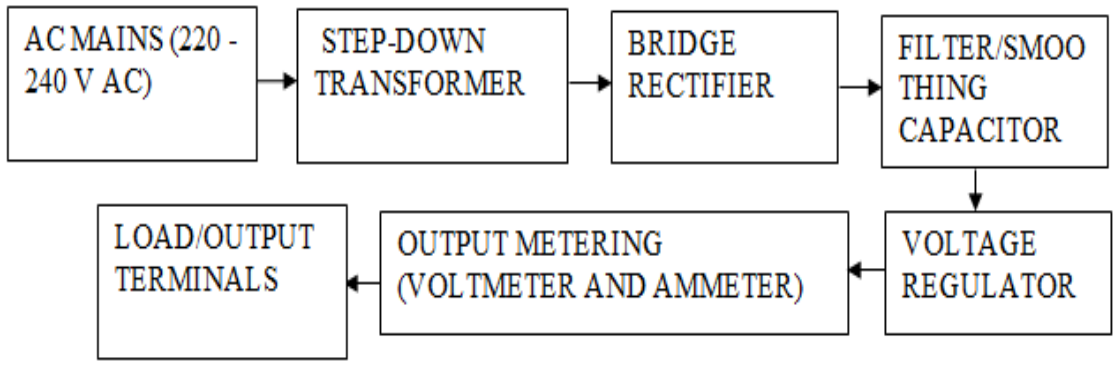

Figure 1: Block diagram of AC-DC converter trainer

An AC–DC converter trainer is an instructional system that demonstrates the conversion of mains AC (220–240 V) into a stable low-voltage DC supply for electronic applications. The process involved stepping down the high-voltage AC using a transformer for safety and suitability, rectifying it with a bridge rectifier to obtain pulsating DC, and smoothing it with a capacitor to reduce ripple. A voltage regulator (such as 7805, 7812, or LM317) then stabilized the output despite input or load variations. The system included voltmeter and ammeter displays for monitoring performance, and provided a regulated DC output for connecting loads. Overall, it effectively illustrated the key stages of AC–DC conversion; transformation, rectification, filtering, regulation, and monitoring making it a valuable tool for laboratory learning.

2.1.8 Design and simulation Procedure

The implementation of the AC–DC converter trainer followed a systematic procedure to ensure accuracy, safety, and reliable operation. The process commenced with schematic development and simulation using MATLAB/Simulink, which enabled circuit visualization, functional verification, and early detection of design inconsistencies prior to hardware realization. Subsequently, breadboard prototyping was conducted to validate the performance of individual functional blocks, including the transformer interface, rectification stage, filtering network, and voltage regulation unit. This stage facilitated real-time observation of circuit behavior, confirmation of theoretical design parameters, and iterative correction of errors without compromising final hardware components.

Upon successful validation, the circuit was transferred to a vero (strip) board for permanent assembly. Careful soldering practices were employed to ensure robust electrical connections, minimize noise, and maintain proper signal integrity. The transformer connections were then implemented with particular attention to polarity, insulation, and secure termination, given the presence of high-voltage AC at the primary side and low-voltage AC at the secondary side. The rectification stage was realized using a full-wave bridge configuration, implemented either with discrete diodes or an integrated rectifier module. Component orientation was verified to ensure correct biasing conditions. This was followed by the installation of electrolytic capacitors for filtering, with capacitance values selected to effectively reduce ripple and stabilize the DC output.

Voltage regulation was achieved using linear regulator integrated circuits, including 7805, 7812, and LM317, to provide fixed and adjustable outputs. Appropriate thermal management measures, such as heat sinks, were incorporated to maintain stable operation under varying load conditions. To enhance usability and instructional value, analog or digital meters were integrated for real-time monitoring of voltage and current. The complete system was then housed in a custom-fabricated enclosure, designed with provisions for switches, terminals, indicator LEDs, meters, and adequate ventilation. Internal wiring was carefully organized, insulated, and secured to prevent electrical faults. Finally, comprehensive quality assurance and safety testing were conducted, including continuity checks, grounding verification, fuse validation, and short-circuit testing. These measures ensured that the trainer operates safely, meets basic electrical standards, and is suitable for laboratory use in educational environments. The complete circuit diagram of AC-DC converter is shown in Figure 2

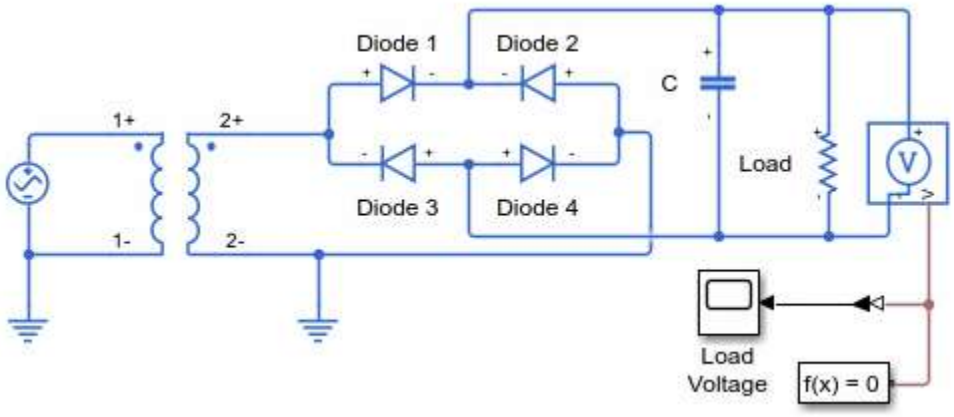

Figure 2: Complete circuit of AC-DC converter

3.0 Result and Discussion

The results obtained from the testing of the AC–DC Converter Trainer are presented in Tables 3.1, 3.2, 3.3, 3.4, 3.5 and 3.6 respectively. To improve the reliability and credibility of the findings, repeated trials and uncertainty analysis were incorporated. Each key parameter (input voltage, transformer output, rectified DC voltage, ripple voltage, and regulated outputs) was measured across five (5) trials under identical conditions. The results were averaged, and the standard deviation was computed to quantify measurement variability. The observed variations were minimal, indicating stable system performance and good repeatability of the experimental setup.

3.2 No-Load Test Results

The no-load test was conducted by powering the trainer from a 220–240 V AC mains supply with no load connected to the DC output terminals. The purpose was to determine the inherent output voltage, rectifier behaviour, and filter capacitor performance.

Table 3.1: No-Load Output Measurements

Parameter	Expected Value	Mean of Measured Value	Standard Deviation (±)	Combined uncertainty (±)	Observation
AC input voltage	220 -240 V	231 V	0.50 V	1.20 V	Within Nigerian grid tolerance
Transformer secondary voltage (AC)	12 – 0 – 12 V	12.4 V	0.10 V	0.20 V	Slightly rise due to no load
Rectified DC voltage (unregulated)	15.5 – 16 V	15.92 V	0.03 V	0.10 V	Aligns with theoretical calculation
Ripple voltage	≤1.0 V	0.48 V	0.01 V	0.03 V	Effective filtering
Regulated 5 V Output	5.0 V	5.02V	0.01 V	0.03 V	Stable
Regulated 12 V Output	12.0 V	12.05 V	0.02 V	0.06 V	Stable
LM317 minimum output	1.25 V	1.30 V	0.02 V	0.02 V	Normal regulation range
LM317 maximum output	20 V	18.95 V	0.03 V	0.10 V	Within expected range

Interpretation of No-Load Results

The results show that the AC–DC converter trainer operates with high accuracy, stability, and repeatability, closely matching theoretical predictions. The input voltage (231.00 ± 1.20 V) falls within Nigeria's standard range, with minor variations due to normal mains fluctuations. The transformer output (12.40 ± 0.20 V) and rectified voltage (15.92 ± 0.10 V) agree with expected values, confirming correct design and component selection. Low ripple voltage (0.48 ± 0.03 V) indicates effective filtering, while regulated outputs (5.02 ± 0.03 V and 12.05 ± 0.06 V) remain within tolerance limits. The LM317 provides a stable adjustable output (1.30 ± 0.02 V to 18.95 ± 0.10 V), with slight limitations due to practical voltage drops. Overall, low standard deviations and small uncertainties confirm reliable, consistent performance, validating the trainer as an effective tool for power electronics laboratory instruction.

3.3 Load Test Results

Load tests were conducted using different resistive loads to evaluate regulation, voltage drop, ripple changes, and thermal behaviour of the regulators.

Table 3.2: Regulated Output under different load conditions
(A) 5 V Regulated Output (7805)

Load (Ω)	Current (A)	Voltage (V)	Ripple (V)	Remark
100 Ω	0.05	5.01	0.05	Very stable
47 Ω	0.11	4.99	0.07	Acceptable regulation
22 Ω	0.23	4.95	0.12	Minor drop, normal
10 Ω	0.50	4.80	0.20	Regulator heating, acceptable

Table 3.3: Regulated Output under different load conditions
(B) 12 V Regulated Output (7812)

Load (Ω)	Current (A)	Voltage (V)	Ripple (V)	Remark
120 Ω	0.10	12.04	0.06	Stable
68 Ω	0.18	11.98	0.10	Stable
33 Ω	0.36	11.80	0.16	Slight drop
18 Ω	0.67	11.50	0.30	Noticeable heating

Table 3.4: Regulated Output under different load conditions
(B) Adjustable Output (LM317)
Voltage tested at 5 V, 9 V and 15V outputs

Set voltage (V)	Load (Ω)	Current (A)	Measured output (V)	Ripple (V)
5	22	0.23	4.96	0.10
9	47	0.19	8.91	0.14
15	100	0.15	14.80	0.20

Interpretation of Load Test Results

The 7805 and 7812 regulators maintained stable voltages even under moderate load. Voltage drops observed at high loads were due to the regulator dropout voltage and heat dissipation limits, which are normal. LM317 showed excellent adjustability and maintained close matching to set voltages. Ripple increased slightly under heavier loads because capacitor discharge occurs faster. The heat-sinks installed on the regulators were adequate, though the 7805 regulator reached noticeable warmth at 0.5 A, confirming the importance of heat dissipation.

3.4 Efficiency Measurement

Efficiency was calculated using:

$$\eta = \frac{P_{out}}{P_{in}} \; x \; 100 \; \%$$

Table 3.5: Efficiency under different loads

Output voltage (V)	Load (Ω)	Output Power (W)	Input Power (W)	Efficiency (%)
5 V	10 Ω	2.40	3.10	77.4
12 V	33 Ω	4.25	5.60	75.9
15 V	100 Ω	2.22	2.90	76.6

The efficiency values fall within 75%–78%, typical for linear regulator–based AC–DC converters. Losses arise mainly from:

a. diode drops in the bridge rectifier,
b. heat dissipation in voltage regulators,
c. transformer core and copper losses.

Although switching regulators would achieve higher efficiency (>85%), linear regulators were intentionally used for simplicity, educational clarity, and noise-free outputs.

3.6 Comparison of Theoretical vs Measured Results

Table 3.6 shows the performance evaluation of the theoretical and measured values

Parameter	Theory	Measured	% error
Unregulated DC output	15.5 – 16 V	15.92 V	2.6 %
Ripple voltage (No load)	0.50 – 1.0 V	0.48 V	4 %
Regulated 5 V	5.00 V	5.02 V	0.4 %
Regulated 12 V	12.0 V	12.05 V	0.4 %

The measured errors remained within an acceptable 5% margin, indicating strong agreement between theoretical predictions and experimental results. Minor deviations were attributed to component tolerances, fluctuations in the mains supply, and measurement limitations such as meter internal resistance. Overall, the system performance closely followed expected behaviour, confirming the validity of the design. The AC–DC trainer produced stable and well-regulated outputs suitable for instructional purposes, with ripple effectively minimized through appropriate filter capacitor selection. The voltage regulators operated within their specified limits, although moderate heating was observed under higher load conditions; this was adequately mitigated using heat sinks. The measured efficiency range of 75% – 78% is consistent with typical linear power supply performance.

Furthermore, the close correspondence between experimental data and theoretical analysis validated the accuracy of the design methodology. The developed trainer therefore fulfilled its intended objectives, providing a practical, safe, and reliable platform for teaching AC–DC conversion principles in engineering laboratories.
The complete low-cost AC-DC converter trainer is shown in Figure 2

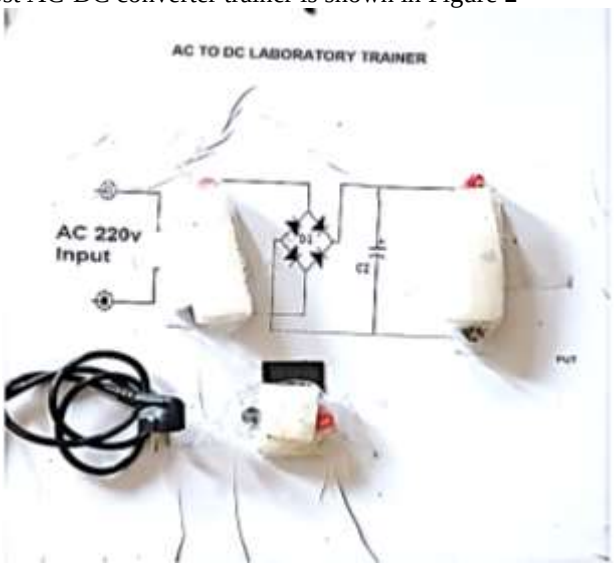

Figure 2: Complete AC-DC converter trainer

4.0. Conclusion

The design and construction of the AC–DC converter trainer were successfully implemented, resulting in a functional and reliable instructional tool that effectively demonstrated the fundamental principles of AC–DC power conversion. The system converted a 220–240 V AC supply into stable, regulated, and adjustable DC outputs with low ripple and good voltage stability. The close agreement between experimental and theoretical results validated the design methodology and confirmed the suitability of the selected components. From an educational perspective, the trainer enhanced understanding of key concepts such as transformer operation, rectification, filtering, voltage regulation, and load behaviour. Its modular configuration, visible components, and accessible test points made it particularly effective for hands-on learning, troubleshooting, and laboratory demonstrations.

However, the use of linear regulators resulted in moderate efficiency (75%–78%) and noticeable heat dissipation under higher load conditions, necessitating heat sinks. Additionally, while the system performed well under controlled laboratory conditions, its evaluation did not include extensive long-term testing or dynamic load

variations, which may influence performance in more demanding scenarios. The trainer was developed using locally available components, significantly reducing production expenses compared to imported commercial trainer kits. This cost advantage enhanced its suitability for deployment in resource-constrained institutions. Nonetheless, large-scale production may require standardization of components, improved enclosure design, and consideration of durability, which could moderately increase overall cost.

Regarding scalability, the current design is best suited for small to medium laboratory environments. Expanding its use to larger class settings or higher power applications would require design modifications, including improved thermal management, higher-rated components, and possibly the integration of more efficient switching regulation techniques. Additionally, incorporating advanced features such as digital monitoring or modular plug-and-play units could further enhance scalability but would introduce additional complexity and cost. Overall, despite these limitations, the developed AC–DC converter trainer achieved its primary objective of providing a practical, safe, and cost-effective platform for teaching power electronics concepts. It represented a meaningful contribution to engineering education, particularly in environments where affordability, accessibility, and hands-on experience are critical.

The work contributes to knowledge by providing a modular, low-cost trainer that clearly demonstrates each stage of AC–DC conversion while bridging the gap between theoretical analysis and practical implementation. It also offers an accessible alternative to expensive imported training equipment. Further research should explore advanced features such as microcontroller-based monitoring, wireless control, and the use of renewable energy sources, thereby improving functionality, scalability, and alignment with modern technological trends.

5.0 Recommendation

The study recommends integrating the AC–DC converter trainer into engineering laboratory courses to enhance hands-on learning and practical skills. Future improvements should focus on adopting switching regulators for higher efficiency, implementing PCB-based designs for better reliability, and developing structured instructional materials to support guided learning.

Acknowledgements

The authors wish to acknowledge the assistance and contributions of the staff of Department of Electrical and Electronic Engineering, Michael Okpara University of Agriculture, Umudike and Federal Polytechnic, Kaltungo, Gombe State toward the success of this work.

Declaration of Generative AI and AI-assisted technologies in the writing process

During the preparation of this work the author(s) used ChatGPT in order to assist in language refinement and grammar correction. After using this tool/service, the author(s) reviewed and edited the content as needed and take(s) full responsibility for the content of the publication.

References

Daud, S. B., Yusof, N. A., and Anuar, S. 2016. Electronic trainer for educational purposes. National Innovation and Invention Competition Through Exhibition (iCompEx).

Erickson, R. W., and Maksimović, D. (2019). Fundamentals of power electronics (3rd ed.). Springer. Hambley, A. R. (2020). Electrical engineering: Principles and applications (7th ed.). Pearson.

Mohan, N., Undeland, T. M., and Robbins, W. P. 2020. Power electronics: Converters, applications and design (4th ed.). Wiley.

Obasi, C. C., and Nwankwo, C. M. 2022. Enhancing practical skills in electronics through the use of laboratory trainer kits. Nigerian Journal of Technical Education, 9(1), 112–125.

Ogbuka, C. C., and Okeke, C. O. 2021. Innovations in power electronics education using modular laboratory trainers. International Journal of Engineering Pedagogy, 11(5), 45–59.

Rashid, M. H. 2021. Power electronics handbook (5th ed.). Academic Press.

Terwe, P. 2023. Design development and review of electrical trainer kits for engineering education. SSRN Electronic Journal, 1–20. (https://doi.org/10.2139/ssrn.4532981)

Thompson, E. A., Johnson, P. R., and Daly, K. 2024. Integration of simulation and hardware trainers in undergraduate power electronics education. ASEE Annual Conference Proceedings,1–10.