JEAS

JOURNAL OF ENGINEERING AND APPLIED SCIENCES

Journal of Engineering and Applied Sciences, Volume 18, Number 1, June 2021, 287-296

Development of a Two-Stroke Petrol Engine Using Reverse Engineering Technique

Okwoka, Daniel E.[1], Ebhojiaye, Raphael S.[2]* and Ibhadode, Akii O. A.[3]

[1]NNPC-SPDC Professorial Chair on Lightweight Automobile Engine Development, Federal University of Petroleum Resources, Effurun.
[2]Department of Production Engineering, University of Benin.
[3]NNPC-SPDC Professor of Lightweight Automobile Engine Development, Federal University of Petroleum Resources, Effurun.
*Corresponding author's E-mail: raphael.ebhojiaye@uniben.edu, Tel.: +2348028972265.

Abstract
Two new brush cutter engines were procured for this study. One of the engines was disassembled, its different parts examined and the engineering drawings of the parts were made. The parts were fabricated, assembled and performance test was done, save for carburettor, spark plug, engine starter, flywheel and ignition coil. The other procured engine was used as the control engine during the performance test. The performance test results showed that the minimum speeds for both engines were closely related (i.e. 2800 rpm for the produced engine and 3000 rpm for the control engine). This is the speed that enables the engine to run without stalling. However, there was disparity in the recorded maximum speed for the two engines. The maximum speed of the produced engine was about 84% of the maximum speed of the control engine. The control engine had a steady operating temperature of about 140°C after running for 16 minutes while the produced engine had a steady operating temperature of 155.5^{o}C under the same time. This showed that the operating temperature of the produced engine was about 11% higher than the control engine. In conclusion, although the locally produced two-stroke engine performed satisfactorily, there is still room for improvement.

Keywords: Petrol engine, Reverse engineering, Internal combustion engine, Two-stroke engine.

1. Introduction

The two-stroke engine is one of the types of internal combustion (IC) engine that completes a two-stroke (up and down) piston power cycle during a single crankshaft revolution (Two-stroke engine, 2019). This compares with a four-stroke engine, which needs four piston stroke to perfect a power cycle in two crankshaft revolutions. Within two-stroke engines, the close of the combustion stroke and the start of the compression stroke occur concurrently, with simultaneous intake and exhaust functions. Two-stroke engines regularly have a large power-to-weight proportion, with power available within a small span of rotational speeds. Two stroke engines have a significantly diminished amount of parts in motion relative to four-stroke engines and therefore will be more compact and altogether lighter (Two-stroke engine, 2019). In two-stroke engines, the burnt gas is drained from the cylinder by the difference in pressure between it and the atmosphere, instead of by the movement of the piston (Garrett et al, 2001; Stone, 2006).

In this way, as the piston moves down, the two stroke process can be said to have compromised the initial combination of the power and exhaust stroke, and then induction and compression as it travels up again. Multiplying the amount of power strokes per revolution could be thought to give power output capacity twice that of a four-stroke engine, but then this is not true, the yields of two-stroke engines span from about 10 to 40 percent higher than that of their equivalent four-stroke engines. The induction and exhaust take place around the bottom dead centre, the inlet and exhaust ports will be found close to the cylinder bottom extreme and the piston could covered or

uncovered it. This prevents the use of valves and their activating gear, so one in every of the principal attractions of the two-stroke engine is its intense simplicity, and thus low cost. Rueter (2019) stated that the two stroke engine has a relatively less internal friction, more torque and a decreased size which can increase the engine efficiency. Laget, et al (2013) disclosed that currently, the two stroke engines have the highest fuel efficiency of above 50%.

Engineering is that method of designing, fabricating, assembly and maintenance of products and structures. Two forms of engineering exist, these are the forward engineering and reverse engineering. Forward engineering is the conventional method of shifting from high-level ideas and analytical designs to the physical realisation of the device (Vinesh & Fernandes, 2008). Eliam (2005) described reverse engineering (also known as back engineering), as the "processes of extracting knowledge or design information from anything man-made and re-producing it or reproducing anything based on the extracted information". Abella et al. (1994) defined reverse engineering as, "the fundamental concept of manufacturing an object based on a unique or physical model in the absence of the utilisation of an engineering design".

Yau (1997) described reverse engineering, as the "method of extracting modern geometry from a fabricated component by digitizing and adjusting the current CAD model". Reverse engineering is presently broadly utilized in a number of applications, like fabrication, industrial design, and mould design and reproduction (Ebhojiaye & Ibhadode, 2013; Oladeinde et al., 2016). Gwom (2018) in his paper entitled "Industrializing Nigeria and Sudan as developing economies through patent protection: Reverse engineering to the rescue", argued that rreverse engineering has the potentials of speeding up national development in developing economies like Nigeria and Sudan if properly utilized.

2.0 Material and methods

Two new brush cutter engines used for cutting grass were purchased. This preference was based on its simplicity and accessibility. One of the engines was stripped down, the different parts were examined and the engineering drawing of each component was made. The engine parts were locally produced and assembled, and extensive performance tests were carried out. The carburetor and the ignition system were not produced locally. The other commercial engine was utilized as the control engine. The production of the locally made engine parts was based on the principle of jobbing or one piece production process; and general purpose machines, equipment and highly skilled machinists, welders and foundry men were used.

2.1Engineering Drawing

The engineering drawing for each part of the dismantled two-stroke engine was made. This requires taking actual measurements of the dimensions of the engine parts. The whole engine was disassembled to ensure that the precise measurements of the engine parts were taken. Measurements of dimensions were made via the following tools: steel rule, Vernier calipers, etc. At the laboratory, changes were made to this drawing to match the available technology.

The engineering drawing and changes made to the drawing were done using the Autodesk Inventor software. The changes were carefully carried out considering the engine design parameter. Figure 1 – 9 show the working drawing produced for the produced engine parts and Figure 10 shows the engineering drawing of the two-stroke engine.

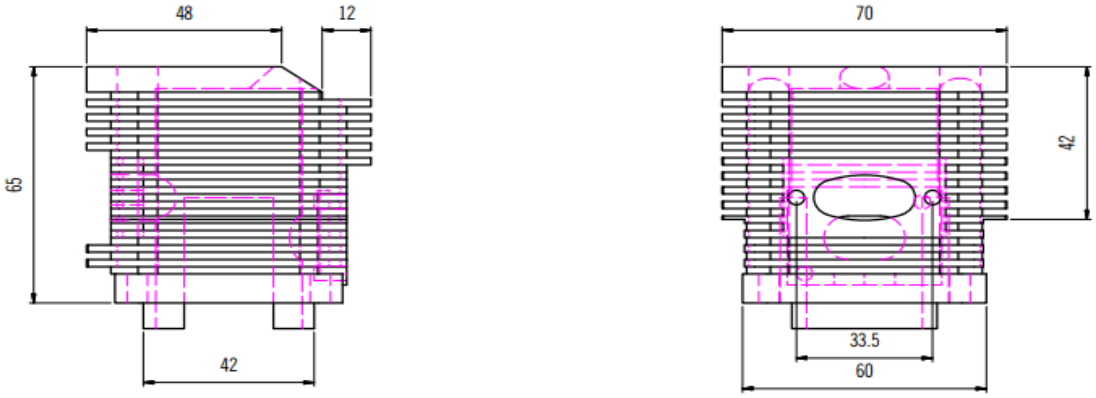

Figure 1: Working Drawing of the Engine Block



Figure 2: Working Drawing of the Gudgeon Pin (Big-End-Centre)

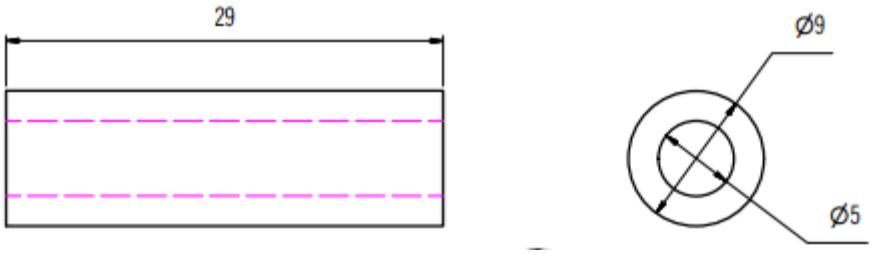

Figure 3: Working Drawing of the Gudgeon Pin (Small-End-Centre)

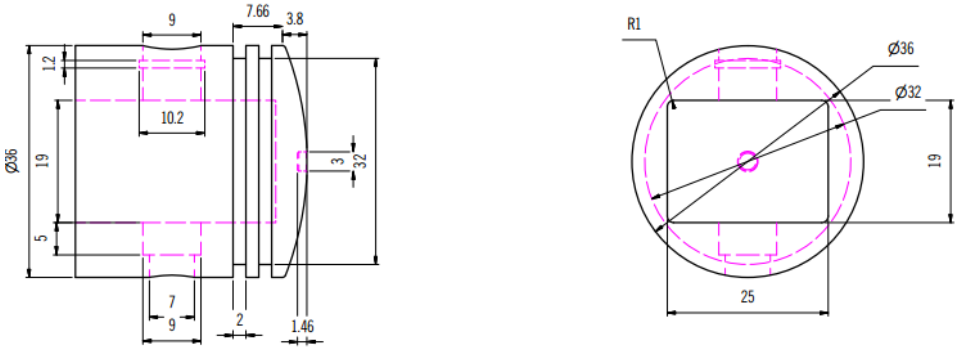

Figure 4: Working Drawing of the Piston

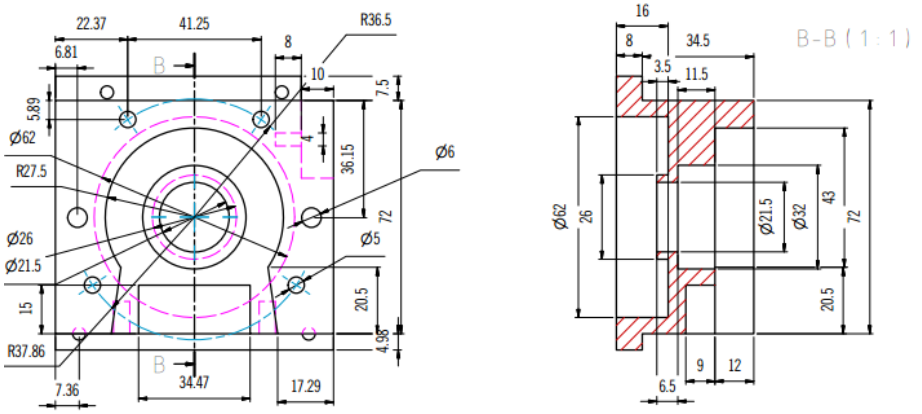

Figure 5: Working Drawing of the Crankcase 1

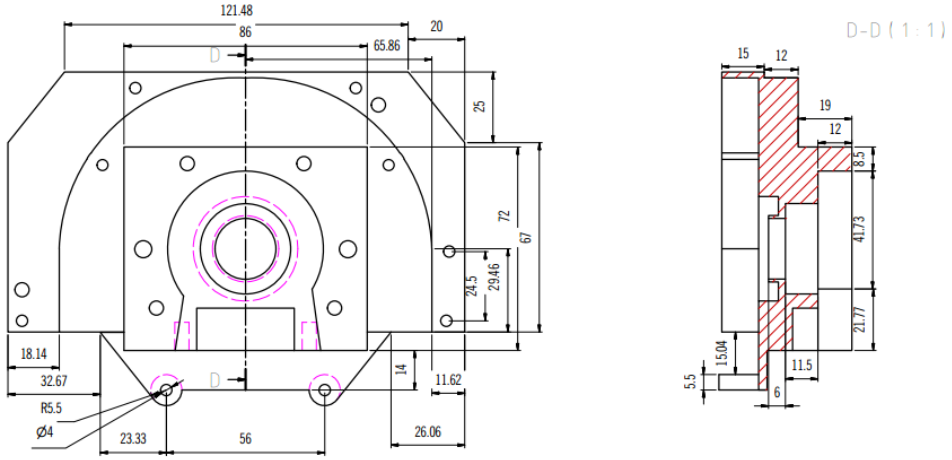

Figure 6: Working Drawing of the Crankcase 2

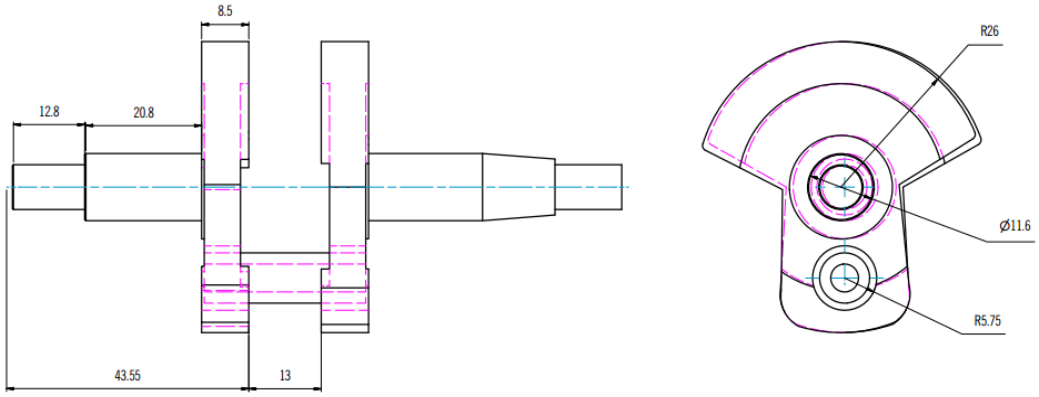

Figure 7: Working Drawing of the Crankshaft

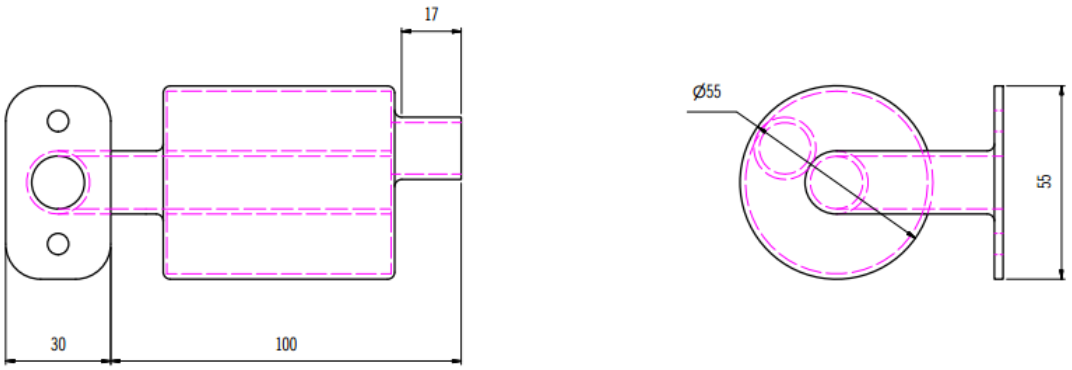

Figure 8: Working Drawing of the Exhaust

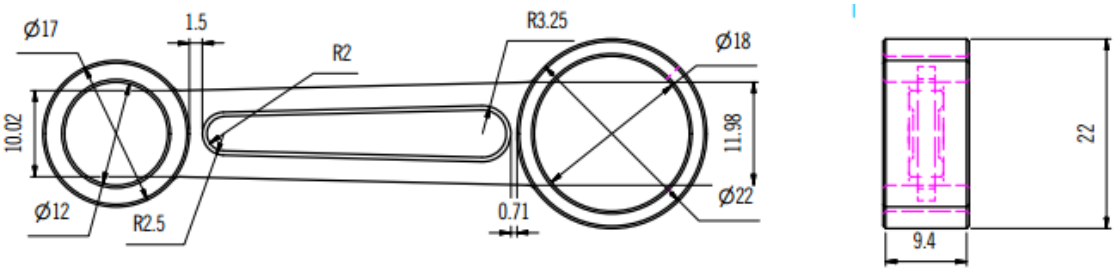

Figure 9: Working Drawing of the Connecting Rod

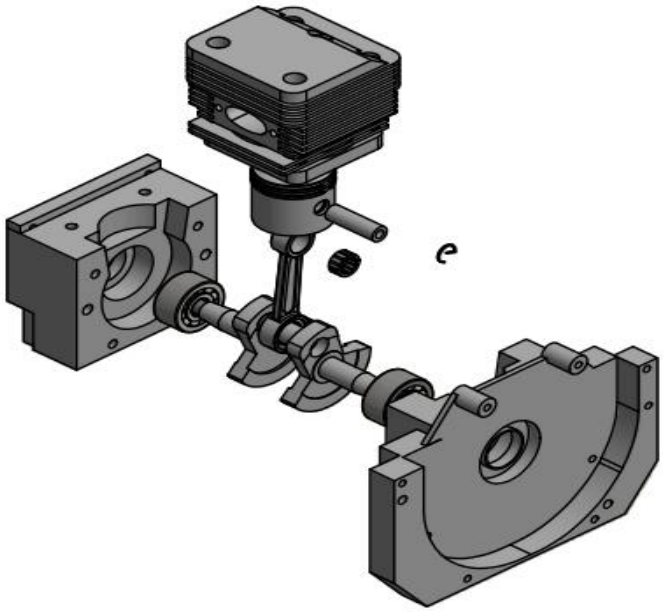

Figure10: Engineering Drawing of the Two-stroke Engine

2.2 Identification of Material Type

The engine parts were carefully examined in order to determine the type of material used. Iron verification test was also carried out on the materials using the magnet. Table 1 shows the confirmed materials used for the various

engine parts and Table 2 shows the substituted materials used for the produced engine. The following factors were considered in the selection of materials in Table 2, these factors include: availability of material; the cost of the material; ease of material removal; and weight of the material.

Table 1: Bought-out Engine Parts Materials

Engine Part	Material
Piston	Aluminium alloy
Crankshaft	Mild carbon steel
Crankcase	Aluminium alloy
Engine block	Aluminium alloy
Connecting rod	Mild carbon steel
Gungeon pin	Mild carbon steel
Exhaust	Steel alloy
Flywheel housing	Aluminium alloy

Table 2: Material Substitutes used for the Fabrication of the Engine Parts

Engine Part	Material
Piston	Aluminium cast
Cylinder Liner	Cast iron
Crankshaft	Mild steel
Crankcase	Aluminium cast
Engine block	Aluminium cast
Connecting rod	Aluminium cast
Gungeon pin	Mild steel
Exhaust	Mild steel
Flywheel housing	Aluminium cast

2.3 Production Method used for the Engine Parts

Jobbing (or one-off) production process was used in the production of the engine parts. Several production processes, such as casting, machining, welding, fabrication and bench fitting operations etc., were used. Table 3 shows the different engine parts and the production process used to make them or sources.

Table 3: The Fabricated and Bought-out Engine Parts.

Part Name	Method Of Manufacture
Piston	The aluminium alloy cast was turned on a lathe, the piston rinse spot was cut on the lathe machine, the drilling machine was used to drill the slot for the gungeon pin, the circlip slot was cutting on the lathe machine using a special tool. the slot where the connecting rod is assembled to the gungeon pin is cutting on the milling machine.
Crankshaft	Fabricated from a carbon steel rod, it was turned on the lathe, the woodruff key slot was cut on the milling machine by using a woodruff cutter. Threading crankshaft was also carried out on the lathe
Silencer	Made with sheet metals and pipes, joined by welding
Crankcase	Fabricated from aluminium alloy cast. It was turned on the lathe, material removal was also carried out via the milling machine using a milling cutter, and holes of 4mm were drilled, later threaded with 5mm tap which served as the joining processes.
Engine block	Fabricated from an aluminium composite consisting of Periwinkle shell, Palm Kernel Shell and pure aluminium. The aluminium composite consist of 98% of pure aluminium (Ebhojiaye et al. 2018; Ebhojiaye and Sadjere 2018). It was reduced to a rectangular block on the milling machine, and the moved to the lathe machine for machining operation, the slot for the exhaust and carburettor opening were also cut using a milling cutter on the milling machine, and holes of 4mm were drilled, later threaded with 5mm tap which served as the joining processes.
Connecting rod	Fabricated from aluminium alloy cast, in a sand mould and finished by bench work

Gudgeon Pin	Machined from mild steel
Flywheel housing	Fabricated from aluminium alloy cast, turned on the lathe
Sleeve	Made from cast iron, machined and force fitted into the engine block, iron gum was added during the process. Slots were cut using a milling cutter on the milling machine
Gudgeon pin circlip(2)	Purchased
Ball bearing	Purchased
Engine block gasket	Cut out form cardboard paper
Crankcase gasket	Cut out form cardboard paper
Carburetor	Purchased
Carburetor gasket	Cut out form cardboard paper
Fuel tank	Purchased
Flywheel	Purchased
Flywheel key	Purchased
Exhaust gasket	Bought out
Spark plug	Purchased
Coil	Purchased
Starter	Purchased
5mm Bolts	Purchased
Piston rings	Purchased

2.4 Dimensional Check

The produced engine components (Figure 11) were tested for dimensional accuracy. This was carried out in accordance with the dimensions on the drawing. The measurement was carried out using the instruments referred to in section 2.1. After the dimensional test, the surface finish was carried out using hand files and grinders.



Figure 11: Some of the Produced Engine Componenets

2.5 Performance Tests of the Produced Parts and Assembling

Each of the produced components was used one after the other to replace the original component in the purchased engine. The engine was then tested to see if it would run. The tested component was certified okay when the engine could run for more than five minutes without failure. The manufactured parts were assembled as shown in Fig. 12, and tested with the purchased ignition and carburettor system. The engine was allowed to run for more than five minutes non-stop.



Fig.12: Pictorial View of the Two-stroke Engine Produced

2.6 Assembled Engine

All the manufactured parts were assembled into a complete engine as shown in Fig. 12. However, the original carburettor system, spark plug, engine starter, flywheel and ignition coil were used.

3.0 Results and Discussions

The experimental results obtained from the performance test on the produced engine are shown and discussed.

3.1 Results of Engine Speed

Table 4 shows the measured engine speeds for the produced and control engines. The minimum and maximum engine speeds were measured the engines. The same carburettor was used to run each engine. The minimum and maximum speeds were obtained by setting the carburettor to the minimum and maximum settings. The speeds were measured with a mechanical tachometer.

Table 4: Engine Speeds of the Produced and Control Engines

Engine type	Engine Speed(rpm)	
	Minimum	Maximum
Locally produced engine	2800	5900
Control engine	3000	7000

From Table 4, the minimum speeds for both engines were about the same. This is the speed that enables the engine to run without stalling. However, there is disparity in the recorded maximum speed for the two engines. The maximum speed of the produced engine was about 84% of the maximum speed of the control engine. This result shows that there is room for improvement on the locally produced engine.

3.2 Results of Engine Temperature

The engine was run for a length of time under no load condition starting from room temperature to determine its operating temperature. The temperatures of the engine top cylinder were measured at an interval of 1 minute for both engines with a digital read-out thermocouple. Figure 13 shows the curves plotted from the recorded results for both engines.

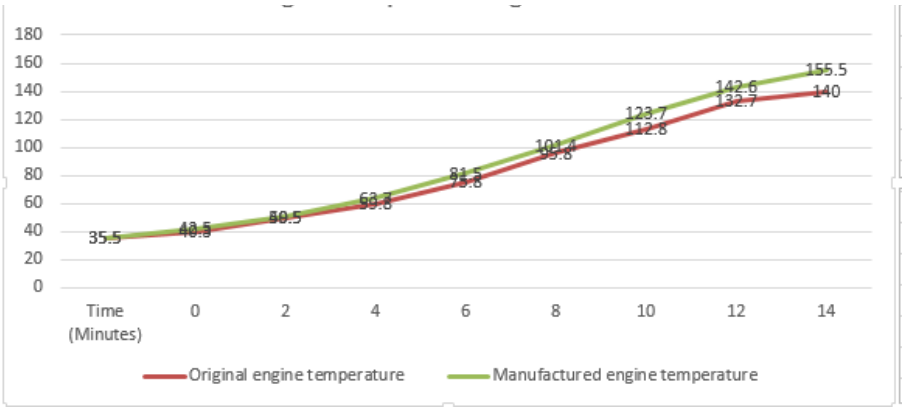

Figure 13: Graph of Temperature against Time for both Engines

The graph in Figure 13 showed that the control engine had a steady operating temperature of about 140°C after running for 16 minutes. On the other hand the produced engine had a steady operating temperature of 155.5^{o}C under the same time of 16 minutes. This showed that the operating temperature of the produced engine was about 11% higher than the control engine.

The increase in engine temperature and speed of the produced engine with respect to the control engine as obtained in this study is similar to the ones obtained by other researchers such as Oladeinde et al. (2016). This study has shown that IC engines parts that were locally produced with available materials and skills, was able to carry the same load capacity satisfactorily when compared to similar imported engine capacities.

4.0. Conclusion

The successfully development of two-stroke engine using the reverse engineering technique has been achieved in this study. From the study, the produced and the control engines were observed to have relatively close minimum speeds values. There was however, significant difference in the recorded maximum speed for the two engines. The maximum speed of the produced engine was about 84% of the maximum speed of the control engine. Also, the control engine had a steady operating temperature of about 140°C after running for 16 minutes while the produced engine had a steady operating temperature of 155.5^{o}C under the same time of 16 minutes. This showed that the operating temperature of the produced engine was about 11% higher than the control engine. The results showed although the locally produced two-stroke engine performed satisfactorily, there is room for improvement. One important significant of this study is that the local skills acquired from the development of the two-stroke engine can be exploited for commercial production in Nigeria.

Acknowledgment

We wish to acknowledge the immense contributions of NNPC and SPDC to the success of this study. We thank them for sponsoring this project.

References

Abella, R. J.; Daschbach, J. M. and McNichols, R. J., 1994. Reverse engineering industrial applications.*Computers and Industrial Engineering,* vol. 26(2): pp. 381-385.

Ebhojiaye, R.S. And Ibhadode, A.O.A., 2013. Production of a Piston for a Single-Cylinder, Four Stroke, 8 Horse Power (hp) Diesel Engine by Reverse Engineering Technique. *The Journal of Nigerian Institution of Production Engineers*, Vol. 15, pp. 80-87.

Eilam, E., 2005. *Reversing: Secrets of Reverse Engineering*. (1st edition) John Wiley & Sons.

Garrett, T, Newton, K. and Steeds, W., 2001.*The motor vehicle*. (13th edition) Oxford: Butterworth-Heinemann.

Gwom, G. S., 2018. Industrializing Nigeria and Sudan as Developing Economies through Patent Protection: Reverse Engineering to the Rescue. *Public and International Law Journal, Nassarawa State University*, vol. 3: pp. 1 – 22.

Laget, O., Ternel, C., Thiriot, J., Charmasson, S., Tribotté, P., and Vidal, F., 2013.Preliminary Design of a Two-Stroke Uniflow Diesel Engine for Passenger Car.*SAE International Journal of Engines*, vol. 6: pp. 596–613.

Oladeinde, M.H. and Ebhojiaye, R.S. and Augoye, A.K., 2016. Production of some Engine Parts for A Single-Cylinder, 0.67hp Petrol Engine Generator using Reverse Engineering Method. *Journal of the National Association of Mathematical Physics*, Vol. 33. Pp. 387 – 394.

Rueter, D., 2019. 2-Stroke Scavenging in Conventional and Minimally-Modified 4-stroke Engines for Heavy Duty Applications at Low to Medium Speeds.*Inventions*, vol. 4(44): pp. 1 – 13.

Stone, R., 2006. *Introduction to internal combustion engines*. (2nd edition) Basingstoke: Macmillan.

Two-stroke engine, 2019.https://en.wikipedia.org/wiki/Two-stroke_engine Accessed January 08, 2020.

Vinesh, R. and Fernandes, K., 2008. *Reverse Engineering: An Industrial Perspective*. (2008 edition) Springer Verlag, London.

Yau, H.T., 1997. Reverse engineering of engine intake ports by digitization and surface approximation.*International Journal of Machine Tools and Manufacture*, vol. 37 (6): pp. 855 – 871.