UJEAS

UNIZIK JOURNAL OF ENGINEERING AND APPLIED SCIENCES

UNIZIK Journal of Engineering and Applied Sciences 5(2), June (2025), 2614-2629
Journal homepage: https://journals.unizik.edu.ng/index.php/ujeas
PRINT ISSN: 2992-4383 || ONLINE ISSN: 2992-4391

Development of pacemaker using signal conditioning, sensor integration and control systems techniques

Ogbodo C. S* and Abonyi S. E.
Department of Electrical Engineering Nandi Azikiwe University, Awka.
*Corresponding Author's E-mail: cossy4you@yahoo.com

Abstract
The rising incidence of mortality in hospitals today can be attributed, in part, to the inadequacy and inefficiency of existing medical instruments to swiftly and accurately diagnose ailments. This underscores the urgent need for the development of effective medical equipment, such as pacemakers. In this context, observations from a conventional bradycardia case revealed a heart rate of 0.85 Hz, which falls below the normal healthy threshold of 1.0–1.67 Hz. However, with the integration of a pacemaker, the system was able to immediately sense, process, and correct this anomaly, restoring the heart rate to a healthy range. Similarly, in the domain of biomedical instrumentation, conventional battery voltage was observed to be approximately 2.4 V, insufficient for efficient charging and sustained device operation. Upon integration of the pacemaker system, the voltage was processed and elevated to 2.88 V, effectively meeting the operational threshold (2.8 – 3.0 V) and significantly enhancing the charging and working capability of the battery-powered medical device. These findings affirm the critical role of pacemakers and related instrumentation in improving the diagnostic and therapeutic efficacy of modern healthcare systems.

Keywords: pacemakers, instrumentation principles, cardiac arrhythmias, bradycardia, tachycardia, sensors.

1.0 Introduction

The medical sector in this era faces significant challenges, particularly the lack of advanced medical devices capable of addressing the alarming rise in mortality rates (World Health Organization, 2023). A major contributor to this issue is the prevalence of incorrect diagnoses and ineffective treatments, often stemming from the inability of current medical devices to dynamically respond to patients' physiological changes (Sörnmo and Laguna 2018). However, technological advancements have begun to mitigate these challenges through the integration of Biomedical Engineering and Instrumentation principles (Enderle, Blanchard, and Bronzino, 2005). Among these innovations, pacemakers stand out as a critical advancement in cardiac healthcare (Trohman et al., 2020). These life-saving devices are designed for individuals suffering from irregular heart rhythms (arrhythmias) (Kusumoto et al., 2019). The development of pacemakers leverages core principles of Instrumentation Engineering, incorporating sensors, actuators, signal processing, and control systems to regulate the heart's electrical activity (Webster, 2009). By delivering controlled electrical impulses to the cardiac tissue, pacemakers ensure that heart maintains a rhythm sufficient to support effective blood circulation (Ellenbogen, Wilkoff, Kay, and Auricchio 2014).

The continued need for improved pacemakers is essential in tackling conditions such as bradycardia and tachycardia, which disrupt the heart's electrical conduction system (Zipes and Jalife, 2013). If left untreated, these arrhythmias can lead to severe complications, including heart failure, stroke, or sudden cardiac arrest (Al-Khatib, et al., 2018). Pacemakers address these health issues by restoring normal heart rhythms through electrical stimulation and by synchronizing atrial and ventricular contractions, thereby enhancing overall cardiac output and patient outcomes (Hayes and Friedman,2000). However, most existing pacemakers operate in an open-loop or semi-automatic mode. Fully closed-loop systems capable of real-time, multi-sensor feedback-based pacing decisions are still under research and not widely implemented in clinical practice. Earlier, in 1970s Lithium battery technology extended device longevity. And in 2000s advanced rate-responsive and dual-chamber pacemakers became standard. The most recent Innovations which includes Leadless pacemakers, wireless connectivity, and AI-driven control systems are shaping

the future. Despite these advancements, several challenges remain. These includes but not limited to Energy Efficiency, Signal Accuracy and the rate of responsiveness to physiological changes in patients. Furthermore, Trohman et al in their paper "Sensors for Rate-Adaptive Pacing: How they work, strengths and limitations" published in the year 2020, did not discuss fully closed-looped pacemaker which resulted in over pacing, completion and patient mismatch. Therefore, this work is anchored on using instrumentation principles techniques like sensor technology, signal conditioning and feedback system to develop full feedback pacemaker that it can respond dynamically to the physiological changes in the patients' body system.

1.1 Biomedical Instrumentation Systems

1.1.1 Components of Biomedical Instrumentation Systems.

Biomedical instrumentation systems integrate multiple components, including sensors, signal processing units, display systems, and power supplies, to collect and analyse physiological data. The reliability, accuracy, and safety of these components are critical for ensuring optimal patient care. The core components of biomedical instrumentation system include measurands, sensors/transducers, amplifiers, signal processors, data acquisition units, and display/output devices (Webster, 2009). The block diagram in figure 1.1 below shows how the discrete components are connected to form a typical Biomedical system.

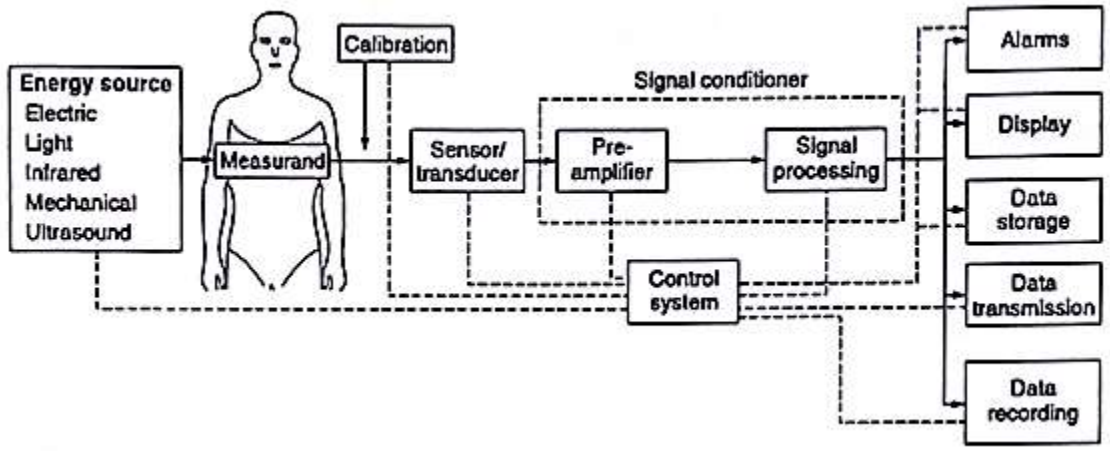

Figure 1.1: Functional Block of a Biomedical Instrumentation System (Webster, 2009).

1.1.2 Measurands

Biomedical instrumentation is used to measure physiological parameters (measurands) from the human body for diagnosis, monitoring, and treatment. A measurand is any physical, chemical, or biological quantity that is sensed, converted, and processed into readable data (Webster, 2009). The accuracy and reliability of measurands are critical for patient safety and effective clinical decision-making (Enderle Blanchard and Bronzino, 2005). Measurands can be classified into physiological measurands, and biochemical measurands; these are chemical properties measured using biosensors and lab-on-chip technologies, and biomechanical measurands. These involve movement, force, and structural properties of the human body. The proper selection of measurement techniques and instruments, along with careful calibration and consideration of patient variability, is essential for ensuring the reliability and accuracy of the data collected. Whether through sensors for electrical activity, chemical concentration, or physical properties, measurands form the foundation of any biomedical instrumentation system. However, pockets of challenges that can be noticed in the area of measurement. Accuracy and Calibration Issues Variability in biological signals due to patient differences. Frequent recalibration of sensors is needed for long-term accuracy. Also, Signal Processing and Data Noise Motion artifacts distort Electrocardiogram (ECG) and Electroencephalogram (EEG) signals (Sörnmo and Laguna 2018).

1.1.3 Sensors/Transducers

Biomedical transducers play important role in modern healthcare by enabling the measurement and monitoring of physiological parameters. Their selection depends on the specific application, accuracy, sensitivity, and biocompatibility required (Enderle Blanchard and Bronzino, 2005). Advances in technology are continually enhancing their performance, miniaturization, and integration into wearable and implantable systems.

They are critical component of a biomedical instrumentation system, responsible for detecting physiological signals and converting them into electrical signals for processing (winter, 2012). Below is a detailed breakdown of sensors/transducers in the context of biomedical instrumentation: A sensor detects a physical or chemical quantity (e.g., temperature, pressure, or pH) and converts it into a measurable signal (Webster, 2012). A transducer converts one form of energy into another (e.g., mechanical to electrical). Figure 1.2 shows the circuit diagram of a typical Biomedical sensor or transducer.

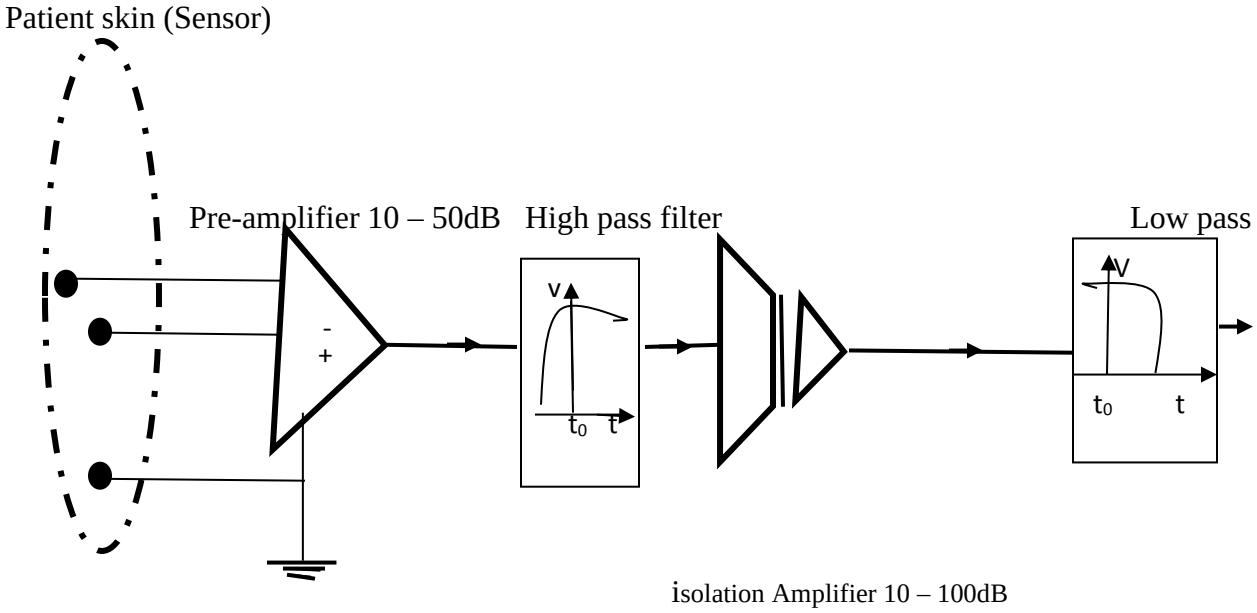

Figure 1.2: The circuit diagram of a typical Biomedical sensor or transducer (Webster, 2009).

1.1.4 Signal Conditioning

Signal conditioning is a crucial process in biomedical instrumentation that ensures raw physiological signals are properly processed before analysis. Biomedical signals are often weak, noisy, and non-linear, requiring amplification, filtering, and conversion to obtain accurate data for medical diagnosis and monitoring (Scarsella, et al. 2023).

It also improves the quality of the signal from a sensor by performing one or more of the following functions: amplification, filtering, isolation, or conversion. It ensures the signal is accurate, noise-free, and compatible with subsequent processing stages. Meanwhile, a well-designed signal conditioner is essential for accurate and reliable biomedical measurements, ensuring that physiological data is processed and presented without distortions or artifacts.

2.0 The Design Method

In the course of development of this thesis, several steps were taken and they are sequentially arranged as shown in figure 3.1

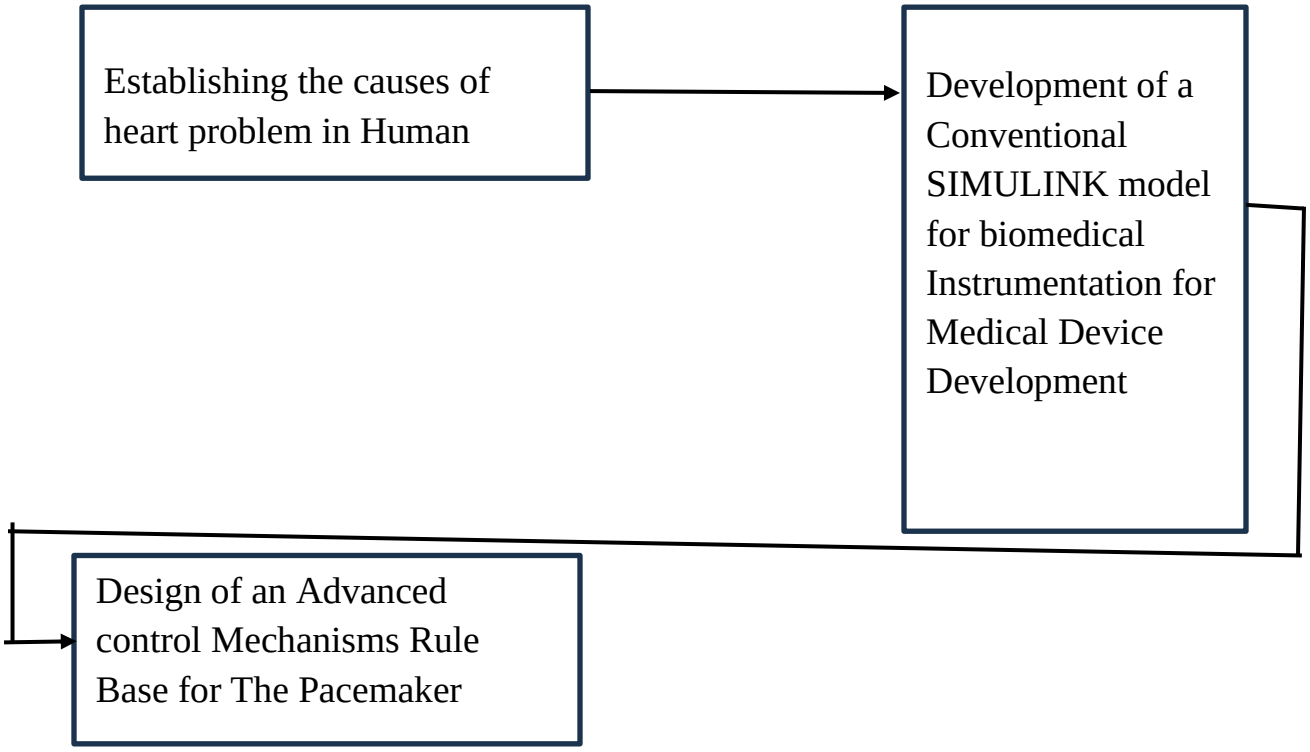

Fig 3.1 Block diagram of the methods used to achieve the design.

2.1 Establishing the causes of heart problem in Human

The data for characterized abnormal heart rate ranges (expressed in beats per minute, bpm) was obtained from clinical guidelines provided by the American Heart Association (AHA, 2023)," and the PhysioNet MIT-BIH Arrhythmia Database." These were authentic data used in this thesis. The authenticity of the data obtained from the database are credible because they were developed by Massachusetts Institute of Technology (MIT) and Beth Isreal Deaconess Medical Center, a world leading scientific research supported by National Institute of Health (NIS). According to the PhysioNet MIT-BIH Database and American Heart Association (AHA, 2023), the heart rate for a normal healthy person rage between 60 to 100 bpm. However, the heart rate range for Bradycardia is less than 60 bpm, for Tachycardia is greater than 100 bpm. While bpm is not a strict SI unit, it is commonly accepted in medical and physiological contexts. However, if we convert to a pure SI unit, which is hertz (Hz) (1 Hz = 1 cycle per second), we can express it as follows:

Normal Heart Rate Range: In bpm; 60 to 100 beats per minute (bpm).

Lower limit = 60bpm/60bpm = 1.0Hz and

Upper limit = 100pbm/60bpm = 1.666Hz = 1.67Hz.

Therefore, the normal heart beat rate in SI unit is approximately: 1.0 to 1.67 Hz

A bad heart rate, which may indicate potential health issues, falls outside the normal range of 1.0 to 1.67 Hz (i.e., 60–100 beats per minute).

2.2 Developed Conventional SIMULINK model for biomedical Instrumentation for Medical Device Development.

This was developed in a MATLAB environment with the required blocks meant for biomedical instrumentation for medical device development and linked together. The empirical data obtained from American Heart Association (AHA, 2023),"PhysioNet MIT-BIH Arrhythmia Database" were integrated it and simulated. This is shown in fig 2.2, this was modelled to show how the critical components the system like sensors that monitors the conventional heartbeats (bradycardia and tachycardia), atrial sensor as well as signal generator are interconnected.

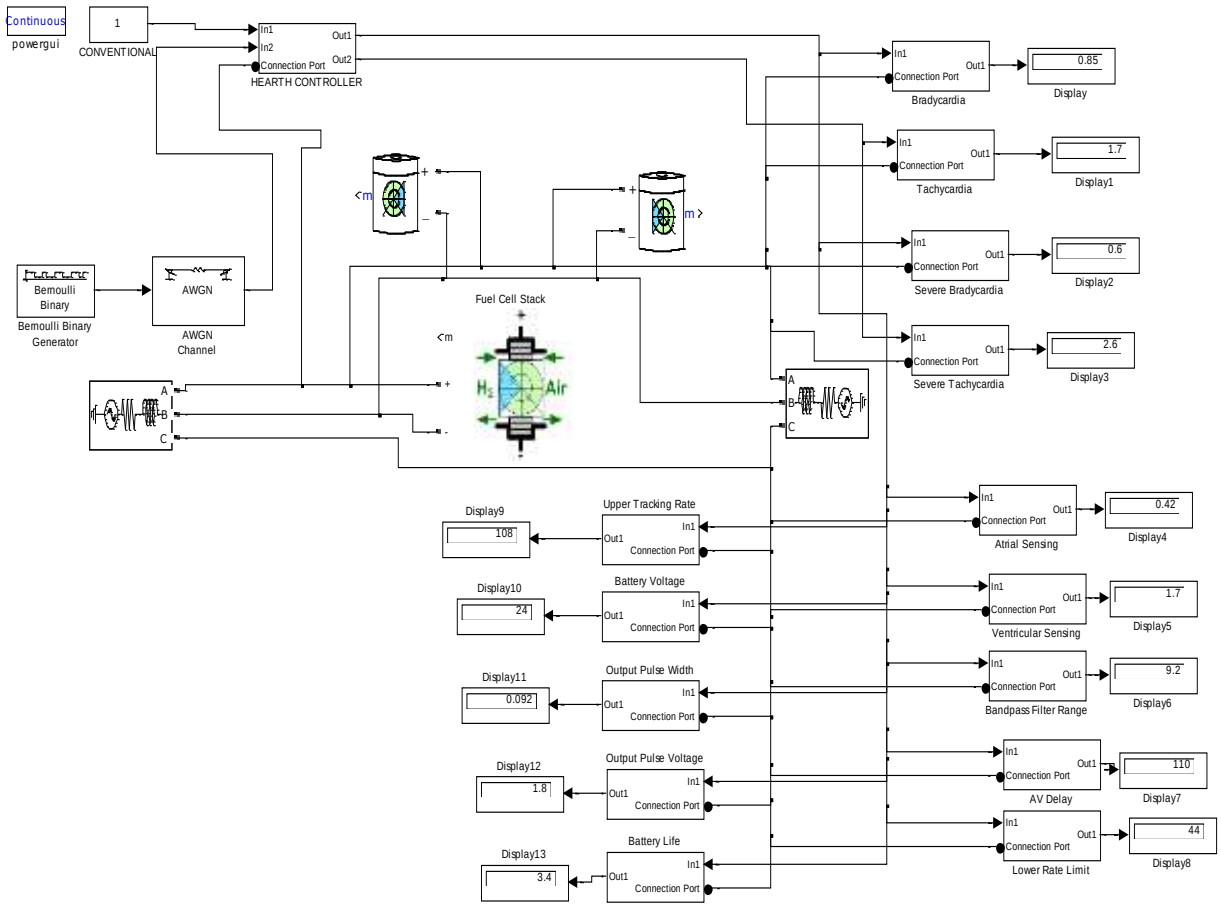

Fig 2.2: Developed conventional SIMULINK model for Biomedical instrumentation device.

2.3 Development of an Advanced control Mechanisms Rule Base for The Pacemaker.

This was designed in fuzzy tool box in MATLAB environment. It has two inputs made up of hearth beat and parameter, in addition has an output of result. The heart beat monitors if it is within the threshold of normalized value or not for quick detection and normalization. On the other hand, the input parameter detects if the hearth beat is within the threshold of normalized value or not. If it is not within the threshold, it detects and normalizes it.

The fig 2.3 above shows the designed advanced control mechanisms fuzzy inference system that will make pacemakers respond dynamically to for physical activity, and metabolic demands, reduce immune reaction risk, improve infection resistance and normalize abnormal heart beat. For better operation and robustness of the design, a designed advanced control mechanisms rule base that will make pacemakers to respond dynamically to physiological changes, such as variations in heart rate, physical activity, and metabolic demands, reduce immune reaction risk, improve infection resistance and normalize abnormal heart beat was incorporated. Meanwhile, the rules were written in fuzzy inference system as shown in table 2.3 This had two inputs of hearth beat and parameter. It equally had an output of result. This is formed in a Fuzzy Inference System (FIS), the heartbeat can serve as a critical physiological input parameter for intelligent decision-making, especially in applications related to health monitoring, medical diagnosis, or adaptive control systems. Below are the key functions of heartbeat as an input in a fuzzy inference system:

1. Health Monitoring and Diagnosis

Function: To assess the current health status or detect abnormalities such as arrhythmia, stress, or fatigue.

Explanation: The fuzzy system interprets heart rate ranges (e.g., low, normal, high) and maps them to health conditions like bradycardia, tachycardia, or stable condition.

2. Risk Assessment

Function: To evaluate cardiovascular risk or stress levels.

Explanation: Based on fuzzy rules, a high or erratic heartbeat can trigger alerts for potential medical risks.
3. Real-Time Decision Making
Function: To trigger adaptive decisions in real-time (e.g., in wearable devices, patient monitoring).
Explanation: A sudden spike in heartbeat may cause the system to send alerts, start logging ECG, or adjust medication schedules.
4. Adaptive Control in Biofeedback Systems
Function: To adjust feedback mechanisms such as breathing exercises or relaxation guidance.
Explanation: A high heart rate classified as "stressed" by the fuzzy logic can activate calming interventions.
5. Classification and Pattern Recognition
Function: To classify heart rate into fuzzy linguistic terms like "Low", "Moderate", "High".
Explanation: These terms feed into the fuzzy rule base, contributing to broader decision-making like stress detection or emergency response.

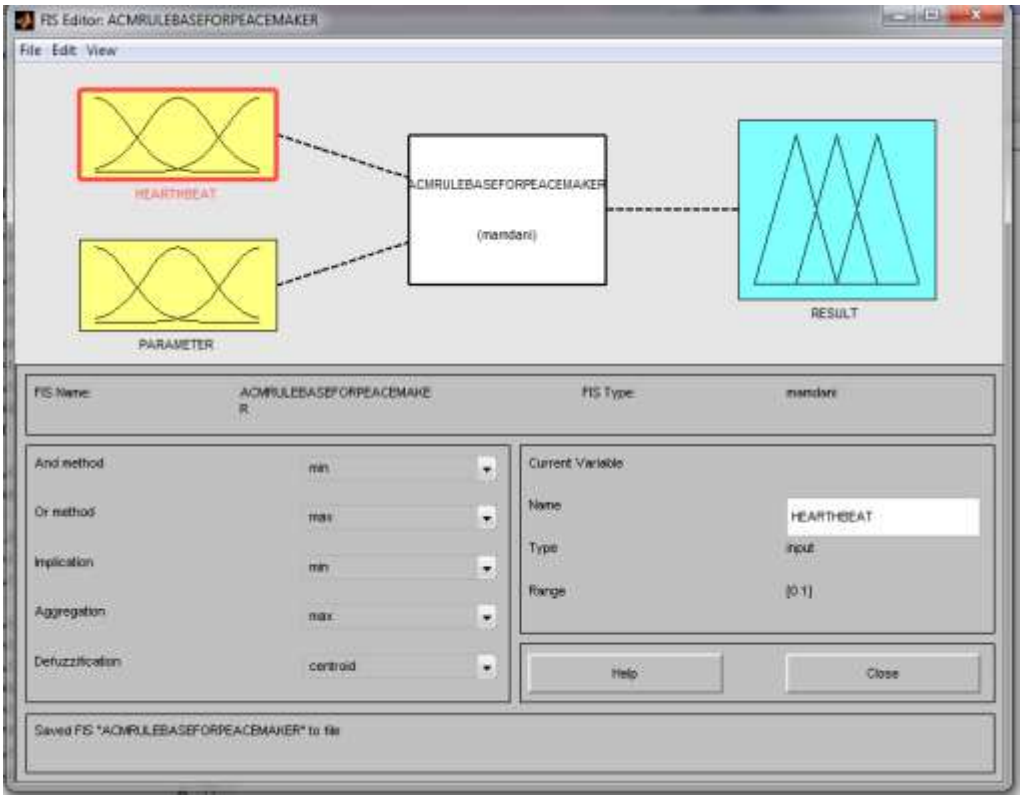

Fig 2.3: Designed advanced control mechanisms fuzzy inference system.

6. Input to Multi-Parameter Decision Systems
Function: To work in combination with other inputs like blood pressure, temperature, or motion data.
Explanation: In a fuzzy-based health monitoring system, heartbeat complements other vitals to form a comprehensive patient profile.
7. Personalized Monitoring
Function: To adapt monitoring thresholds based on patient history or age.
Explanation: The fuzzy system can be designed to consider that a normal heart rate for an athlete differs from an elderly individual.

IF (heartbeat is HIGH) AND (body temperature is HIGH)
THEN (patient's condition is CRITICAL)

Parameter input:

When heartbeat is used as an input in a Fuzzy Inference System (FIS), it is characterized by several key parameters that help define its behaviour and interpretation within the system. These parameters are essential for creating membership functions, fuzzy linguistic variables, and rules in the inference engine. Table 3.3 shows the key Parameters of Heartbeat as an Input in Fuzzy Inference System.

Table 2.1 key Parameters of Heartbeat as an Input in Fuzzy Inference System.

S/N	Parameter	Description	Typical Unit/Range
1	Heart Rate (BPM)	Number of heart beats per minute; the primary input to FIS	40 – 180 BPM
2	Heart Rate Variability (HRV)	Measures variations in time intervals between heartbeats	Low / Medium / High (ms)
3	Pulse Strength	Reflects the force of the heartbeat; used in some advanced medical applications	Weak / Normal / Strong
4	Rhythm Regularity	Determines if the heartbeat is regular or irregular (arrhythmia detection)	Regular / Irregular
5	Rate of Change	The slope or speed at which heart rate is increasing or decreasing	ΔBPM/second
6	Resting Heart Rate	Heartbeat rate when the subject is inactive; baseline reference	Typically, 60–100 BPM
7	Max Heart Rate	Maximum threshold based on age or condition (e.g., 220 - age)	Age-based estimation
8	Heart Rate Zone	Classified into training zones (e.g., warm-up, fat-burning, cardio, peak)	Zone 1 – Zone 5
9	Time Domain Parameters	Statistical features like SDNN, RMSSD used in HRV analysis	ms (milliseconds)
10	Frequency Domain	Power spectrum analysis: LF (Low Frequency), HF (High Frequency) components	Hz and Power (%)

Fuzzy Linguistic Variables for Heartbeat Input:
These are typical fuzzy labels used in membership functions:
Very Low
Low
Normal
High
Very High
These linguistic variables help describe the fuzzy state of the heartbeat input and guide fuzzy rules.

Example Fuzzy Membership Function Setup for Heart Rate
Linguistic Term bpm Range (Example)
Very Low 40 – 55
Low 50 – 70
Normal 65 – 90
High 85 – 110
Very High > 105
It is worthy These ranges are application-dependent and may vary for children, adults, or athletes.

Example Rule Base
IF (Heart Rate is Very High) AND (HRV is Low)
THEN (Patient Condition is Critical)
IF (Heart Rate is Normal) AND (Rhythm Regularity is Regular)
THEN (Patient Condition is Stable)
Result as the output:
In a Fuzzy Inference System (FIS), when heartbeat and its related parameters (such as heart rate variability, rhythm regularity, and rate of change) are used as inputs, the output typically reflects an intelligent decision or classification based on the health status or operational condition of the monitored system.

Example Output Scenarios:
1. Health Monitoring System:
Inputs: Heartbeat = 110 BPM (High), HRV = Low
FIS Output: "Critical Condition" or "High Risk"
Interpretation:
The system identifies abnormal cardiac activity and recommends immediate attention.
2. Fitness Monitoring:
Inputs: Heartbeat = 85 bpm (Normal), Rhythm = Regular
FIS Output: "Stable" or "Normal Performance Zone"
Interpretation: The body is functioning within safe limits, no action needed.
3. Real-Time Biofeedback Control:
Inputs: Heartbeat = Rising rapidly, Pulse Strength = Strong
FIS Output: "Initiate Relaxation Protocol"
Interpretation: Suggests biofeedback (like breathing exercises) to reduce stress.

Overall Summary of the Result
The output in such a fuzzy system is not a binary result, but a graded, interpretable conclusion such as:
"Low Risk", "Stable", "Alert", "Critical", or "Exercise Zone"
The result depends on the fuzzy rules and membership functions designed during system development.
It provides a soft decision that is closer to human reasoning, ideal for systems like patient monitoring, sports analytics, or adaptive wearables. In view of the foregoing the program that controls the advanced control rule base was written and it is shown in the table 3.2 below.

Table 2.2 Advanced control mechanism rule base

S/No	HEAT RATE	PARAMETER	RESULT
1	IF HEARTH BEAT IS NOT WITHIN THE THRESHOLD OF 1HZ THROUGH 1.67HZ DETECT AND CURE	AND PARAMETER IS NOT WITHIN THRESHOLD DETECT AND RECTIFY	THEN RESULT IS NONE BIOMEDICAL INSTRUMENTATION FOR MEDICAL DEVICE DEVELOPMENT
2	IF HEARTH BEAT IS PARTLY NOT WITHIN THE THRESHOLD OF 1HZ THROUGH 1.67HZ DETECT AND CURE	AND PARAMETER IS PARTLY NOT WITHIN THRESHOLD DETECT AND RECTIFY	THEN RESULT IS NONE BIOMEDICAL INSTRUMENTATION FOR MEDICAL DEVICE DEVELOPMENT
3	IF HEARTH BEAT IS WITHIN THE THRESHOLD OF 1HZ THROUGH 1.67HZ DETECT AND CONFIRM HEALTHY	AND PARAMETER IS WITHIN THRESHOLD DETECT AND MAINTAIN	THEN RESULT IS BIOMEDICAL INSTRUMENTATION FOR MEDICAL DEVICE DEVELOPMENT

However, a comprehensive designed advanced control mechanisms rule base that will make pacemakers to respond dynamically to physiological changes to reduce immune reaction risk, improve infection resistance and normalize abnormal heart beat is depicted in the flow chart shown in fig 2.4

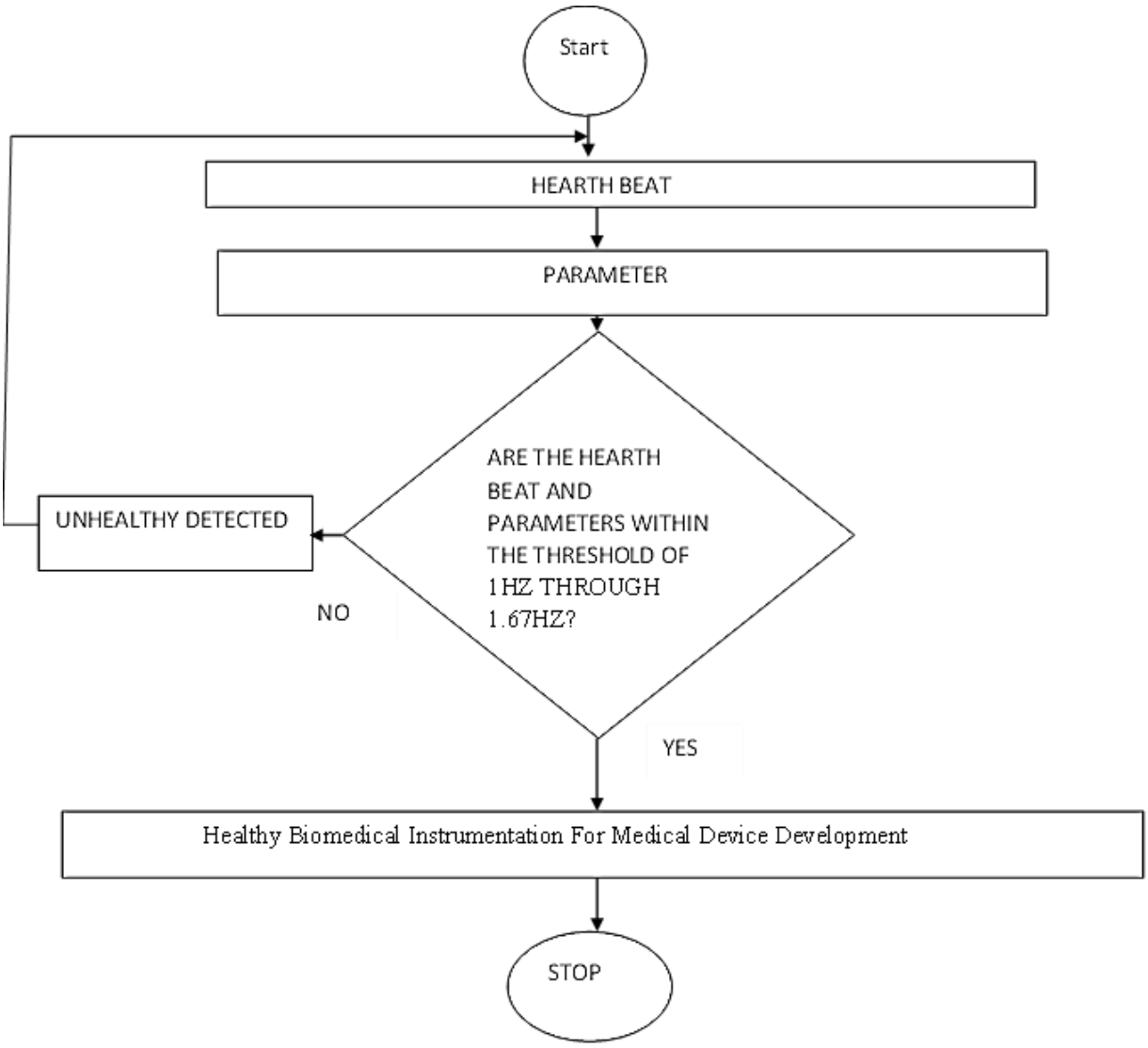

Fig 2.4: The designed advanced control mechanisms rule base of the pacemaker.

From the flowchart in fig 2.4 above, inputs to the system (HEAETBEAT and PARAMETERS) where initialized, these went into the decision box where then inputs are compered to know if they are within the threshold values. If the condition is not certificatory, that is detection of unhealthy condition, it goes back to take the inputs once again. On the other hand, if the conditions are met it implies that the aim for the design is achieved.

2.4 The operational mechanism of the designed advanced control mechanisms rule base

The operational mechanism of the designed advanced control mechanism will make pacemakers to respond dynamically to physiological changes. The two inputs, which are heart beat and parameter coupled with the output of result were all observed in the operational mechanism. The stipulated three rules in table 2.2 were equally observed during the operational mechanism to show the effective applications of the rules. Fig 2.5 shows the operational mechanism of the designed advanced control mechanisms rule base.

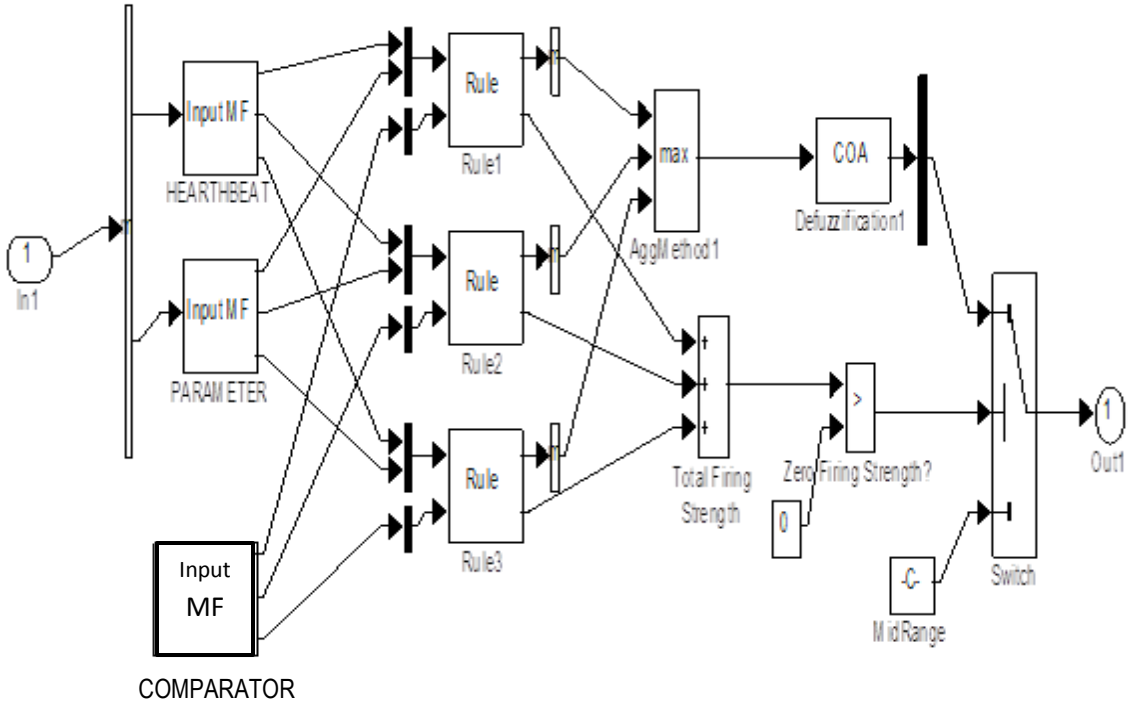

Fig 2.5: The operational mechanism of the designed advanced control mechanisms rule base.

The two inputs of heartbeat and parameter coupled with the output of result as well as the Input MF (Monitoring Fuzzy) as shown in figure 2.5 were all observed in the operational mechanism. The stipulated three rules, tagged Rule 1 to Rule 3 were equally observed during the operational mechanism to show the effective applications of the rules. Obviously, this operational will make pacemakers to respond dynamically to physiological changes, such as variations in heart rate, physical activity, and metabolic demands, reduce immune reaction risk, improve infection resistance and normalize abnormal heart beat. Meanwhile, the final output of the mechanism as observed is shown as Out1.

3.0 RESULT AND DISCUSSION:

The results and discussion of this study are cantered on the application of signal conditioning, sensor integration and control systems techniques in the development and performance evaluation of a pacemaker, a critical medical device used to manage cardiac arrhythmias. Biomedical instrumentation plays a vital role in accurately measuring, processing, and controlling biological signals, especially in life-sustaining devices like pacemakers, where precision and reliability are paramount especially in Nigerian hospitals. In this context, the pacemaker serves as a model system to demonstrate how such as signal acquisition, amplification, filtering, processing, and feedback control can be harnessed to develop efficient and responsive medical devices. The outcomes of this research highlight both the theoretical and practical aspects of applying these principles to ensure effective cardiac pacing, safe operation, and optimal patient adaptation. This section provides a comprehensive analysis of the experimental results obtained from the design and simulation of pacemaker components, including the sensing electrodes, pulse generator, timing circuits, and feedback control mechanisms. Key performance indicators such as signal fidelity, response time, output pulse characteristics, and power consumption were examined to determine the device's viability in clinical applications. Comparative evaluations with existing pacemaker technologies were also conducted to assess improvements in reliability, biocompatibility, and adaptability.

3.1 Case: Bradycardia.

Table 3.1 shows the Comparison of Conventional Bradycardia heart beat and Pacemaker Bradycardia heartbeat. The code that was used to generate data to plot figure 3.1 is shown in figure 3.2.

Table 3.1 Effect of pacemaker on Conventional Bradycardia

Time(s)	Conventional Bradycardia heart beat that causes fatigue, dizziness, or fainting (Hz)	Pacemaker Bradycardia heart beat that stops fatigue, dizziness, or fainting (Hz)
1	0.85	1.02
2	0.88	1.04
3	0.90	1.09
4	0.75	1.0
10	0.87	1.03

However, Fig 3.1 compares the Conventional and Pacemaker Bradycardia heart beat that cause fatigue, dizziness, or fainting in patients. The highest conventional Bradycardia heart beat according to the result here is 0.90Hz and it occurred in 3 seconds. On the other hand, when pacemaker was integrated into the system it corrects the anomaly and beings the heartbeat up at 1.09Hz which is within the threshold range.

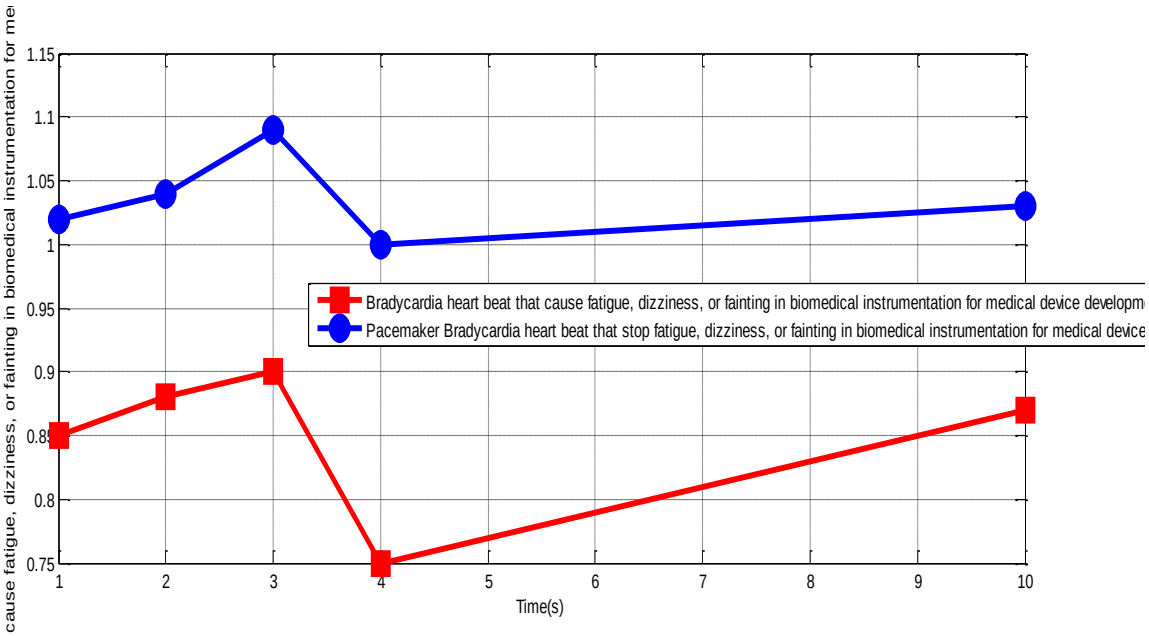

Figure 3.1: The output plot for the effect of pacemaker on Conventional Bradycardia.

```
>> A = [1 2 3 4 10];
B = [0.85 0.88 0.90 0.75 0.87];
C = [1.02 1.04 1.09  1.0 1.03];
plot(A,B,'-Sr','MarkerFaceColor','r','MarkerSize',12,'Linewidth',3);
hold on
plot(A,C,'-Ob','MarkerFaceColor','b','MarkerSize',12,'Linewidth',3);

grid on
Ylabel('Bradycardia heart beat that cause fatigue, dizziness, or fainting in biomedical instrumentati
Legend('Bradycardia heart beat that cause fatigue, dizziness, or fainting in biomedical instrumentati
>>
```

Figure 3.2 Comparison of Conventional and Pacemaker Bradycardia Heartbeat.

3.2 Case: Tachycardia.

Table 3.2 Compares the Pacemaker Tachycardia heartbeat with the Conventional Tachycardia heartbeat that cause chest pain, palpitations, or stroke. The code that was used to generate data to plot figure 3.3 is shown in figure 3.4. In Figure 3.3, the Conventional and Pacemaker Tachycardia heartbeat relationship was shown. The sample was taken for 10 seconds period to monitor conventional Tachycardia heartbeat in a patient and the result shows that the value obtained ranges from 1.7 to 1.92Hz. obviously, this falls outside threshold of 1Hz through 1.67Hz that symbolizes good health. Meanwhile, the action of pacemaker in the system, it tactically changes it to the level (1.56 to 1.62Hz) that indicates good health because it had met the threshold. Meanwhile the lowest conventional Tachycardia heartbeat was 1.7Hz which occurred in 1 second, then, when pacemaker was incorporated into the system it simultaneously made it to fall back to 1.56Hz.

Table 3.2: Effect pacemaker on Conventional Tachycardia

Time (s)	Conventional Tachycardia' heart beat (Hz)	Pacemaker Tachycardia' heart beat (Hz)
1	1.7	1.56
2	1.8	1.58
3	1.9	1.61
4	1.78	1.57
10	1.92	1.62

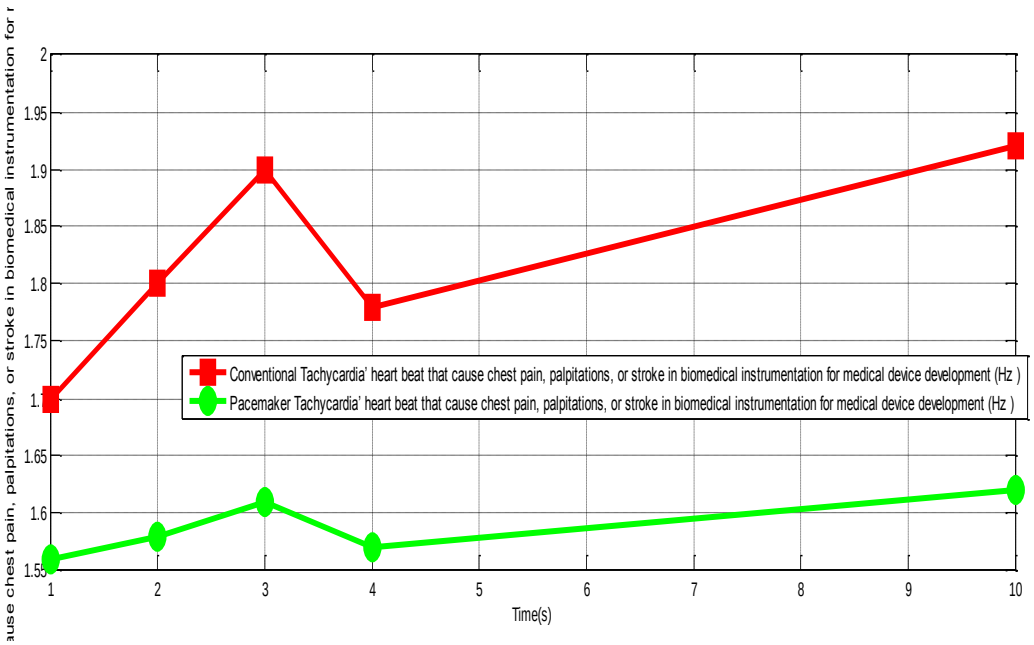

Figure 3.3: The output plot for the effect of pacemaker on Conventional Tachycardia.

```
>> A = [1 2 3 4 10];
B = [1.7 1.8  1.9  1.78 1.92];
C = [1.56 1.58 1.61 1.57 1.62];
plot(A,B,'-Sr','MarkerFaceColor','r','MarkerSize',12,'Linewidth',3);
hold on
plot(A,C,'-Og','MarkerFaceColor','g','MarkerSize',12,'Linewidth',3);


Ylabel('Tachycardia' heart beat that cause chest pain, palpitations, or stroke in biomedical instrume
Legend('Conventional Tachycardia' heart beat that cause chest pain, palpitations, or stroke in biomed
>>
```

Figure 3.4 Comparison of Conventional and Pacemaker Tachycardia Heartbeat

3.3 Case: Abnormal Atrial Sensing.

Table 3.3 Comparison of Conventional Atrial Sensing and Pacemaker Atrial Sensing in biomedical instrument. The code that was used to generate the data to plot graph in figure 3.5 is shown in figure 3.6.

Meanwhile, Figure 4.5 Compares the Conventional and Pacemaker Atrial Sensing in biomedical instrument. The conventional Atrial Sensing is 0.42 to 0.48 mV. It automatically reduced the sensing mechanism because it did not meet the threshold of 0.5mV. On the other hand, when a pacemaker was integrated into the system, it simultaneously increased it between 0.49 to 0.53mV, thereby increasing its sensing mechanism. This analysis shows that the highest conventional Atrial Sensing was 0.48 mV which occurred in 4 seconds. On the other hand, hence the action pacemaker the system will instantly increase the atrial sensing voltage to 0.53 mV.

Table 4.3: Effect of pacemaker on Conventional Atrial Sensing

Time(s)	Conventional Atrial Sensing (mV)	Pacemaker Atrial Sensing (mV)
1	0.42	0.50
2	0.45	0.51
3	0.41	0.49
4	0.48	0.53
10	0.42	0.50

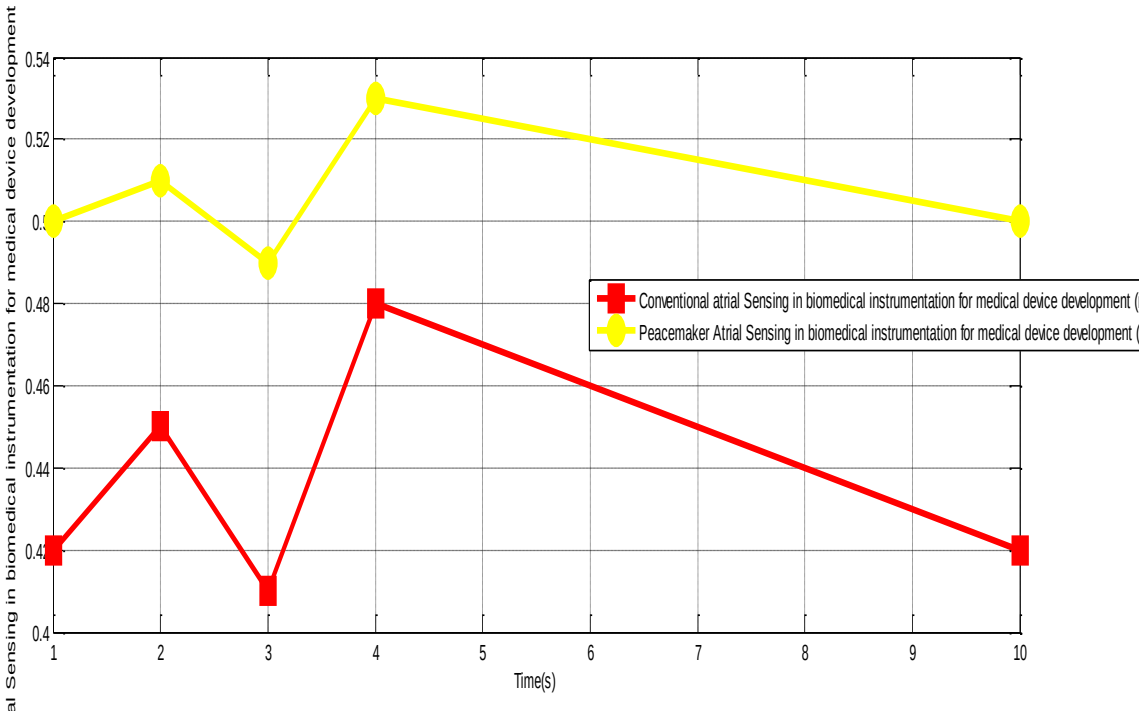

Figure 3.5: The output plot for the effect of pacemaker on Conventional Atrial Sensing.

```
>> A = [1 2 3 4 10];
B = [0.42 0.45  0.41 0.48 0.42];
C = [0.50 0.51  0.49 0.53  0.50];
plot(A,B,'-Sr','MarkerFaceColor','r','MarkerSize',12,'Linewidth',3);
hold on
plot(A,C,'-Oy','MarkerFaceColor','y','MarkerSize',12,'Linewidth',3);
 grid on

Ylabel('atrial Sensing in biomedical instrumentation for medical device development (mV )');Xlabel('T
Legend('Conventional atrial Sensing in biomedical instrumentation for medical device development (mV )
>>
```

Figure 3.6 Comparison of Conventional and Pacemaker Atrial Sensing

4.0. Conclusion

The development of pacemakers using biomedical instrumentation principles has demonstrated the critical role of engineering in advancing life-saving medical technologies. Through the integration of precise signal acquisition, intelligent control mechanisms, and reliable pulse generation systems, this study has shown that instrumentation principles form the foundation for developing effective and efficient cardiac pacing devices. By focusing on the pacemaker, the research highlighted how core elements such as sensing, signal processing, timing control, and power management can be optimized to meet stringent medical standards. The application of these principles not only enhances the functionality and adaptability of the device but also ensures patient safety and comfort over prolonged periods of use. Furthermore, the study underscores the importance of multidisciplinary collaboration between biomedical engineering, electronics, and clinical sciences in the creation of advanced implantable medical devices. The insights gained from this research can be extended to other biomedical instruments, fostering innovation in therapeutic and diagnostic technologies.

5.0 Recommendation

Based on the findings and outcomes of this study, several key recommendations are proposed to enhance future development and application of biomedical instrumentation in pacemaker design and broader medical device innovation:

1. Incorporation of Advanced Artificial Intelligence Techniques: Future pacemaker designs should incorporate artificial intelligence (AI) and machine learning (ML) algorithms to enable predictive cardiac rhythm analysis and adaptive pacing strategies. This will allow pacemakers to learn individual patient patterns and improve therapy accuracy over time.
2. Enhancement of Biocompatible and Miniaturized Components: To ensure patient comfort and reduce surgical risks, manufacturers are encouraged to focus on further miniaturization of pacemaker components and utilize advanced biocompatible materials. These improvements will lead to more compact, durable, and body-friendly implantable devices.
3. Integration with Remote Monitoring and Telemedicine: Pacemakers should be integrated with wireless communication modules to allow real-time remote monitoring of patient cardiac status. This will enable timely medical interventions, reduce hospital visits, and support the expansion of telemedicine in cardiac care.

These recommendations aim to guide future research, design, and clinical integration of pacemakers and other biomedical devices using intelligent and instrumentation-based approaches. Implementing these suggestions will contribute significantly to the advancement of personalized, efficient, and safe medical technologies.

References

Abraham, W.T., Fisher, W.G., Smith, A.L., Delurgio, D.B., Leon, A.R., Loh, E., Kocovic, D.Z., Packer, M., Clavell, A.L., Hayes, D.L. and Ellestad, M., 2002. Cardiac resynchronization in chronic heart failure. *New England Journal of Medicine*, *346*(24), pp.1845-1853.

Al-Khatib, S.M., Stevenson, W.G., Ackerman, M.J., Bryant, W.J., Callans, D.J., Curtis, A.B., Deal, B.J., Dickfeld, T., Field, M.E., Fonarow, G.C. and Gillis, A.M., 2018. 2017 AHA/ACC/HRS guideline for management of patients with ventricular arrhythmias and the prevention of sudden cardiac death: a report of the American College of Cardiology/American Heart Association Task Force on Clinical Practice Guidelines and the Heart Rhythm Society. *Journal of the American College of Cardiology*, *72*(14), pp.e91-e220.

Bardy, G. H., 2005. "*Amiodarone or an implantable cardioverter–defibrillator for congestive heart failure",* New England Journal of Medicine, 352(3), 225–237. https://doi.org/10.1056/NEJMoa043399

Bertalanffy, V. L. 1968. "*General system theory: Foundations, development, applications",* George Braziller, PP. 155-185.

Bristow, M.R., Saxon, L.A., Boehmer, J., Krueger, S., Kass, D.A., De Marco, T., Carson, P., DiCarlo, L., DeMets, D., White, B.G. and DeVries, D.W., 2004. Cardiac-resynchronization therapy with or without an implantable defibrillator in advanced chronic heart failure. *New England Journal of Medicine*, *350*(21), pp.2140-2150.

Burr B. L. H. 1977, *"The lithium iodide–powered cardiac pacemaker. Clinical experience with 250 implantations",* The Journal of Thoracic and Cardiovascular Surgery pp. 421–423.

Cady, W. G., *2018, "An Introduction to the Theory and Applications of Electromechanical Phenomena in Crystals",* Dover Publications pp. 40.

Camm, A. J., Lüscher, T. F., Maurer, G., and Serruys, P. W. 2018, *"The ESC Textbook of Cardiovascular Medicine (3rd ed.)",* Oxford University Press.

Carr, J. J., and Brown, J. M. 2001, "*Introduction to Biomedical Equipment Technology (4th ed)", Pearson Education, PP.25-54.*

Cazeau, S., Ritter, P., Bakdach, 1.S., Lazarus, A., Limousin, M., Henao, L., Mundler, O., Daubert, J.C. and Mugica, J., 1994. Four chamber pacing in dilated cardiomyopathy. *Pacing and Clinical Electrophysiology*, *17*(11), pp.1974-1979.

Ellenbogen, K. A., Wilkoff, B. L., Kay, G. N., Lau, C. P., and Auricchio, A. 2014. "*Clinical Cardiac Pacing, Defibrillation and Resynchronization Therapy (5th ed.)",* Elsevier Saunders. to published work should be indicated at the appropriate place in the text, according to the Harvard system (i.e. using author(s)' name(s) and date), with a reference list in alphabetical order, at the end of the paper (Please see examples here: https://guides.library.uwa.edu.au/harvard/examples).

Enderle, J. D., Blanchard, S. M., and Bronzino, J. D. 2011, "*Introduction to biomedical engineering (3rd ed.)",* Academic Press, PP. 1-34, 509-746.

Hayes, D. L., and Friedman, P. A. 2000." *The history of cardiac pacing*." Cardiology Clinics, 18(4), 515–531. https://doi.org/10.1016/S0733-8651(05)70163-2

Scarsella, M., Barile, G., Stornelli, V., Safari, L. and Ferri, G., 2023. A survey on current-mode interfaces for bio signals and sensors. *Sensors*, *23*(6), p.3194.

Sörnmo L., and Laguna P., 2018, "*Atrial Fibrillation from an Engineering Perspective"*, Springer.

Trotman, R. G., et al. 2020." *Leadless pacemakers: Current status and future directions",* Journal of the American College of Cardiology, 75(3), 278–289. https://doi.org/10.1016/j.jacc.2019.11.031

Webster, J. G. 2020, "Medical Instrumentation: Application and Design 4th ed", John Wiley and sons, PP. 1-21, 102-121, 182-201.

Zipes, D, P,. and Jalife, J. (Eds), 2013, "*Cardiac Electrophysiology: From Cell to Bedside (6th ed)*", Elsevier Saunders.