JEAS

JOURNAL OF ENGINEERING AND APPLIED SCIENCES

Journal of Engineering and Applied Sciences, Volume 15, Number 1, December 2019, 46-55

Effects of Number of Terms on Solution of Simply Supported Thin Isotropic Rectangular Plate

M. O. Okoye[1*],C. H. Aginam[2], V. O Okonkwo[3] and P. D. Onodagu[4]

[1234]*Civil Engineering Department, Nnamdi Azikiwe University, PMB 5025 Awka, Nigeria.*

[*]*Corresponding Author's E-mail: obioraokoye3@gmail.com; phone: +2348063911789*

Abstract

This paper investigates the effects of number of terms of characteristic coordinate polynomial functions in approximating the deformation characteristics- deflections and moments- of a uniformly-loaded thin isotropic rectangular plate with all edges simply supported. Polynomial deflection function series satisfying the prescribed boundary conditions of the plate were developed. First, second, truncated third and third approximations of the polynomial series were used in the Galerkin method to work out maximum deflection and maximum span moment coefficient values for each approximation corresponding to different aspect ratios (p = b/a) ranging from 1.0 to 2.0. The results were compared with the results from previous works in literature and their accuracy and pattern of convergence observed. Inferences were drawn based on the observed response patterns. The results of the short span moment coefficient values for instance, showed average percentage differences of 6.83, 5.04, 25.17 and 279.89 for the first, second, truncated third and third approximations respectively when compared with the results of the classical solution. Hence, it is concluded that beyond the second approximation, the present formulation showed a notable divergence with the results of the classical solution for the mid-span coefficient values.

Keywords: Boundary conditions, Coordinate polynomial, Deflection function, Galerkin method, Rectangular plate

Symbols

A	surface area of plate	p	aspect ratio (p = b/a)
a	primary axis of plate	q	external load
b	secondary axis of plate	w (.) $\overline{w}$ (.)	deflection function, trial function
D	flexural rigidity	α	maximum deflection coefficient
E	Young modulus	β	maximum moment coefficient
h	plate thickness	ν	Poisson's ratio
M	bending moment		

1. Introduction

Rectangular plates, due to their geometry, have found diverse applications in engineering. They are characterized with edge restraints, among which are: free edge, simply supported edge, clamped edge etc. The simply supported edge is one of the most common cases in engineering. This paper analyses the effects of number of terms of characteristic coordinate polynomial deflection functions in approximating the deflected middle surface of a uniformly-loaded thin rectangular isotropic plate with all edges simply supported. A plate is called thin when its thickness is at least ten times smaller than the span of the plate in a plane (Ventsel& Krauthammer 2001). The bending and buckling of rectangular plates have been a subject of study in solid mechanics for more than a century. Many scholars and analysts have investigated the bending of thin rectangular plates using many techniques. But due to the fact that rectangular plates bear applied load as a single unit, it is imperative to understand their bending behaviour in terms of how the number of terms in its deflection function affects the convergence of the solution.

Previous solutions have used trigonometric, hyperbolic, polynomial functions or a combination of these for the deflection function of plates. Szilard (2004) gave the Navier solution for the governing differential equation of all round simply supported plate using double trigonometric infinite series. Aginam, Chidolue and Ezeagu (2012) used different approximations of polynomial deflection functions in the direct variational method in Ritz method for the solution of two cases of uniformly loaded thin isotropic rectangular plates, namely: a plate whose two opposite edges are simply supported and the other two clamped, and a plate whose three edges are simply supported and the other clamped. Imrak and Gerdemeli (2007) used a series of trigonometric and hyperbolic deflection functions for the deflection of a clamped rectangular plate under uniform load. Wang and El-sheikh (2005) applied von karman equations relating the lateral deflections to the applied load for all edges simply supported and clamped using trigonometric functions.

In addition, some researchers have argued that the solutions of plate problems lie in the one-term domain; others have argued that the solutions lie in the multi-term domain. Baraigi (1986) and Lekhnitskii (1968) in their separate works used a one-term polynomial approximation for the deflected surface of the plate using the Ritz method. Mikhlin (1964) used the Ritz method to derive the corresponding one-term solution for a rectangular plate and the three- term solution for a square plate but without calculating the associated moments. Timoshenko and Woinowsky-krieger (1959) presented solutions for the deflection function of a square plate corresponding to both a one-term and a four-term approximation based on the Galerkin method. Hutchinson (1992) used the solution presented in Timoshenko and woinowsky-krieger (1959) and tabulated deflections for uniformly loaded rectangular plates. Vanam, Rajyalakshmi and Inala (2012) used a twelve-term polynomial deflection function for the static analysis of an isotropic rectangular plate using finite element method. Ragesh, Mustafa and Somasundaran (2014) employed a twelve-term polynomial function in Galerkin method for analysis of an integrated Kirchhoff plate element on elastic foundation. Ajagbe, Rufai and Labiran (2014) used a twelve-term polynomial deflection function in finite element method for the analysis of orthotropic plate problems. Zhong and Xu (2017) utilized Fourier series for the bending solution of clamped rectangular thick plates using Midlin's higher-order shear deformation plate theory. It is often assumed that increase in number of terms of the deflection function increases the accuracy of solutions. However, no researcher has investigated the effects of number of terms of characteristic coordinate polynomial deflection functions on the accuracy and convergence of results in comparison with the classical solution for all round simply supported isotropic rectangular plate under uniform load using the Galerkin method.

Nevertheless, this research work gives a numerical solution of all round simply supported rectangular plate under uniformly distributed load using the Galerkin method. The deflected middle surface of the plate is approximated by means of one-term, three-term, four-term and six-term characteristic coordinate polynomial functions corresponding to the first, second, truncated third and third approximations respectively. The unknown maximum deflection and maximum moment coefficient values are determined using the Galerkin method. The results are compared with the results from previous works found in literature (Timoshenko &woinowsky-krieger 1970). The expansion of the deflection function is given in a systematic form. The calculation is performed for rectangular plate of uniform thickness.

2.0 Material and methods

2.1 Theory

The classical plate theory assumes that the material is elastic and that the stress normal to the middle plane σ_z is small and may be neglected. Hence, Hooke's law is obeyed two-dimensionally. The stress and displacement relations can be stated as (Birman 2011):

$$\sigma_{\mathrm{x}} = -\frac{Ez}{1-\nu^2}\left(\frac{\partial^2 w}{\partial x^2} + \nu\frac{\partial^2 w}{\partial y^2}\right) \tag{1a}$$

$$\sigma_{\mathrm{y}} = -\frac{Ez}{1-\nu^2}\left(\frac{\partial^2 w}{\partial y^2} + \nu\frac{\partial^2 w}{\partial x^2}\right) \tag{1b}$$

$$\tau_{xy} = -\frac{Ez}{1+\nu}\frac{\partial^2 w}{\partial x \partial y} \tag{1c}$$

The moment-stress relations are calculated thus,

$$\begin{Bmatrix} M_x \\ M_y \\ M_{xy} \end{Bmatrix} = \int_{-h/2}^{+h/2} \begin{Bmatrix} \sigma_x \\ \sigma_y \\ \tau_{xy} \end{Bmatrix} z dz \quad (2)$$

Integrating equation (2) over the thickness of the plate gives:

$$M_x = -D\left(\frac{\partial^2 w}{\partial x^2} + \nu\frac{\partial^2 w}{\partial y^2}\right) \quad (3a)$$

$$M_y = -D\left(\frac{\partial^2 w}{\partial y^2} + \nu\frac{\partial^2 w}{\partial x^2}\right) \quad (3b)$$

$$M_{xy} = M_{yx} = -D(1-\nu)\frac{\partial^2 w}{\partial x\,\partial y} \quad (3c)$$

Where $D = Eh^3/12(1-\nu^2)$ is the flexural rigidity of the plate, E is the Young modulus, G is the shear modulus and ν is the Poisson's ratio.

But the general equation of plate is given as (Szilard 2004):

$$\frac{\partial^2 M_x}{\partial x^2} + \frac{\partial^2 M_{xy}}{\partial x\,\partial y} + \frac{\partial^2 M_y}{\partial y^2} = -q(x,y) \quad (4)$$

Substituting equations 3 (a-c) into the general equation of plate element yields the governing differential equation of isotropic plate as:

$$\frac{\partial^2 w}{\partial x^4} + 2\frac{\partial^4 w}{\partial x^2\,\partial y^2} + \frac{\partial^4 w}{\partial y^4} = \frac{q(x,y)}{D} \quad (5)$$

Where q is the applied lateral load.

2.2 Galerkin Method

The approximation method adopted for this research is Galerkin. However, the Galerkin formulation of plate bending problem for an isotropic rectangular plate is given in Cartesian coordinate as follows (Szilard 2001):

$$\iint_A \left(D\frac{\partial^4 w}{\partial x^4} + 2D\frac{\partial^4 w}{\partial x^2\,\partial y^2} + D\frac{\partial^4 w}{\partial y^4} - q\right)\bar{w}_1(x,y)dxdy = 0$$
$$\iint_A \left(D\frac{\partial^4 w}{\partial x^4} + 2D\frac{\partial^4 w}{\partial x^2\,\partial y^2} + D\frac{\partial^4 w}{\partial y^4} - q\right)\bar{w}_2(x,y)dxdy = 0$$
$$\vdots$$
$$\iint_A \left(D\frac{\partial^4 w}{\partial x^4} + 2D\frac{\partial^4 w}{\partial x^2\,\partial y^2} + D\frac{\partial^4 w}{\partial y^4} - q\right)\bar{w}_N(x,y)dxdy = 0 \quad (6)$$

The integrals are evaluated over the entire surface area A of the plate and $\bar{w}_{1\ldots N}(x,y)$ are the linearly independent displacement functions that satisfy all the prescribed boundary conditions but not necessarily equation (5). w(x,y) is the plate deflection function which is being approximated in this study as an n-term polynomial, thus:

$W(x,y) = C_1X_1(x)Y_1(y) + C_2X_2(x)Y_2(y) + C_3X_3(x)Y_3(y) \ldots + C_nX_n(x)Y_n(y)$ (7)

Where $X_1, X_2, X_3 \ldots X_n$ and $Y_1, Y_2, Y_3, \ldots Y_n$ are derived coordinate functions in x and y axes respectively.

Equation (7) could be simplified further by putting

$$\bar{w}_1 = X_1(x)Y_1(y)$$

$$\bar{w}_2 = X_2(x)Y_2(y)$$
$$\bar{w}_3 = X_3(x)Y_3(y)$$

.
.
.

$$\bar{w}_n = X_n(x)Y_n(y) \quad (8)$$

Substituting equation (8) into equation (7), we obtain

$w(x,y) = C_1\bar{w}_1 + C_2\bar{w}_2 + C_3\bar{w}_3 \ldots + C_n\bar{w}_n \quad (9a)$

$w(x,y) = \bar{w}C \quad (9b)$

where $\bar{w} = [\bar{w}_1\bar{w}_2\bar{w}_3\bar{w}_4\bar{w}_5\bar{w}_6]$ and $C = [C_1C_1C_1C_1C_1C_1]$

Substituting equation 9 (a-b) into equation (6) and differentiating accordingly gives:

$$a_{11} = \frac{D}{a^4}\iint_A \left[\frac{\partial^4\bar{w}_1}{\partial x^4} + 2\frac{\partial^4\bar{w}_1}{\partial x^2\,\partial y^2} + \frac{\partial^4\bar{w}_1}{\partial y^4}\right]\bar{w}_1(x,y)dxdy$$
$$a_{12} = \frac{D}{a^4}\iint_A \left[\frac{\partial^4\bar{w}_1}{\partial x^4} + 2\frac{\partial^4\bar{w}_1}{\partial x^2\,\partial y^2} + \frac{\partial^4\bar{w}_1}{\partial y^4}\right]\bar{w}_2(x,y)dxdy$$
$$a_{13} = \frac{D}{a^4}\iint_A \left[\frac{\partial^4\bar{w}_1}{\partial x^4} + 2\frac{\partial^4\bar{w}_1}{\partial x^2\,\partial y^2} + \frac{\partial^4\bar{w}_1}{\partial y^4}\right]\bar{w}_3(x,y)dxdy$$

.
.
.

$$a_{nm} = \frac{D}{a^4}\iint_A \left[\frac{\partial^4\bar{w}_n}{\partial x^4} + 2\frac{\partial^4\bar{w}_n}{\partial x^2\,\partial y^2} + \frac{\partial^4\bar{w}_n}{\partial y^4}\right]\bar{w}_m(x,y)dxdy \quad (10)$$

Similarly, the eternal load gives:

$$b_1 = \iint_A q\bar{w}_1(x,y)dxdy$$
$$b_2 = \iint_A q\bar{w}_2(x,y)dxdy$$
$$b_3 = \iint_A q\bar{w}_3(x,y)dxdy$$

.
.
.

$$b_n = \iint_A q\bar{w}_n(x,y)dxdy \quad (11)$$

In matrix form, the above formulation gives:

$$\begin{bmatrix} a_{1,1}a_{1,2} & . & . & .a_{1,m} \\ a_{2,1}a_{2,2} & . & . & .a_{2,m} \\ & . & & \\ & . & & \\ & . & & \\ a_{n,1}a_{n,2} & . & . & .a_{n,m} \end{bmatrix}\begin{bmatrix} C_1 \\ C_2 \\ . \\ . \\ . \\ C_n \end{bmatrix} = \begin{bmatrix} b_1 \\ b_2 \\ . \\ . \\ . \\ b_n \end{bmatrix}\frac{q}{D}a^4 \quad (12)$$

Where $C_1, C_2, \ldots . C_n$ are unknown coefficients to be determined.

2.3 Analysis of Plate and results

Figure 1 shows a thin rectangular isotropic plate with all edges simply supported subjected to a uniformly distributed load. The value of the Poisson's ratio is taken as ν = 0.3. A grid work of beams can be used to represent the deformation surface.

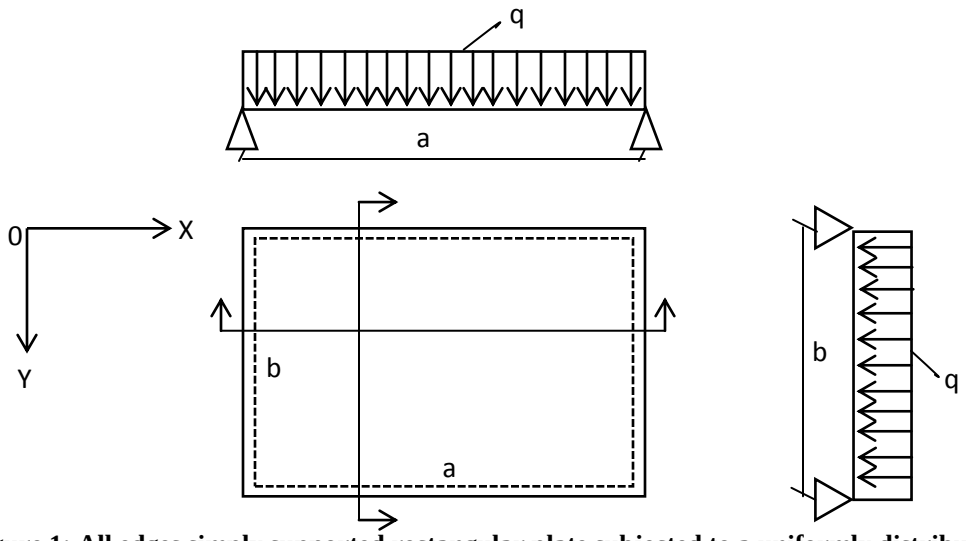

Figure 1: All edges simply supported rectangular plate subjected to a uniformly distributed load q.

The appropriate deflection function must satisfy at least two prescribed conditions at each boundary point. For the plate shown in Figure 1, the boundary conditions are:

$$w(x) = \frac{\partial^2 w}{\partial x^2}(x) = 0 \qquad \text{at } x = 0, 1 \tag{13a}$$

$$w(y) = \frac{\partial^2 w}{\partial y^2}(y) = 0 \qquad \text{at } y = 0, 1 \tag{13b}$$

It is assumed that the deflection function w can be represented in the form of polynomials as follows:

$$w(x) = \sum_{m=0}^{\infty} G_m x^m \tag{14a}$$

$$w(y) = \sum_{n=0}^{\infty} H_n y^n \tag{14b}$$

Where x^m and y^n denote complete sets of independent continuous functions suitable for the representation of the deflected surface. Coefficients G_m and H_n are determined from the prescribed boundary conditions of the plate while m and n are determined by the type of loading on the plate.

The deflection function is given as the product of the two beam functions in x and y axes, thus:

$$w(x, y) = w(x).w(y) \tag{15}$$

2.4 First approximation

For this approximation, the deflection function is given as follows:

$$w(x, y) = C_1 \bar{w}_1 \tag{16}$$

Where C_1 is the unknown coefficient,

$$\bar{w}_1 = (X - 2X^3 + X^4)(Y - 2Y^3 + Y^4) \tag{17}$$

The solution is found by substituting equation (16) into equations (10) and (11) and evaluating the integrals over the entire area A of the plate. The resulting linear equation is solved for the unknown coefficient, C_1. Then, C_1 is substituted into equation (16) to get the deflection of the plate at any arbitrary point (x,y). The associated moments are determined by substituting corresponding values of deflection into equations (3a) and (3b) and solving accordingly. Different values of deflection and the corresponding moment coefficients at the center of the plate are evaluated for aspect ratios $1.0 \leq p \leq 2.0$ and the results are tabulated in Tables 1, 2 and 3 for the deflection, short-span moment and long-term moment coefficient values respectively.

2.5 Second approximation

Here a three-term polynomial for the deflection function is derived as follows:

$$w(x,y) = C_1\bar{w}_1 + C_2\bar{w}_2 + C_3\bar{w}_3 \tag{18}$$

where$\bar{w}_1$ has been defined in equation (17) while

$$\left.\begin{aligned}\bar{w}_2 &= \bar{w}_1X^2 = (X - 2X^3 + X^4)(Y - 2Y^3 + Y^4)X^2\\ \bar{w}_3 &= \bar{w}_1Y^2 = (X - 2X^3 + X^4)(Y - 2Y^3 + Y^4)Y^2\end{aligned}\right\} \tag{19}$$

Therefore,

$$\begin{aligned}w(x,y) = {} & C_1(X - 2X^3 + X^4)(Y - 2Y^3 + Y^4) + C_2(X^3 - 2X^5 + X^6)(Y - 2Y^3 + Y^4)\\ & + C_3(X - 2X^3 + X^4)(Y^3 - 2Y^5 + Y^6)\end{aligned} \tag{20}$$

First, we substitute equation (20) into equations (10) and (11), the resulting 3 x 3 algebraic equation is solved for the unknown coefficients $C_1, C_2,$ and C_3.The determined coefficients are substituted into equation (20) to get the deflection coefficient values at any arbitrary point of the plate. The moment coefficient values are obtained by substituting the deflection values into equations 3 (a-b) and solving accordingly. The results for aspect ratios $1.0 \leq p \leq 2.0$ are shown in Tables 1, 2 and 3 for the deflection, short-span moment and long-term moment coefficient values respectively.

2.6 Truncated third approximation

The deflection function for this approximation will be represented by a four-term polynomial as follows:

$$w(x,y) = C_1\bar{w}_1 + C_2\bar{w}_2 + C_3\bar{w}_3 + C_4\bar{w}_4 \tag{21}$$

where $\bar{w}_1, \bar{w}_2$and$\bar{w}_3$ are defined by equations (17) and (19) while

$$\bar{w}_4 = \bar{w}_1X^2Y^2 = (X - 2X^3 + X^4)(Y - 2Y^3 + Y^4)X^2Y^2 \tag{22}$$

Therefore,

$$\begin{aligned}w(x,y) = {} & C_1(X - 2X^3 + X^4)(Y - 2Y^3 + Y^4) + C_2(X^3 - 2X^5 + X^6)(Y - 2Y^3 + Y^4)\\ & + C_3(X - 2X^3 + X^4)(Y^3 - 2Y^5 + Y^6) + C_4(X^3 - 2X^5 + X^6)(Y^3 - 2Y^5 + Y^6)\end{aligned} \tag{23}$$

The unknown coefficients C_1, C_2, C_3 and C_4 are determined by solving the 4 X 4 algebraic equations obtained by substituting equation (23) into equations (10) and (11). The maximum deflections and moments are determined as before by substituting the obtained coefficients into equation (23) for the deflection. Substituting the deflection into equations 3 (a-b) and solving accordingly gives the moments. The results for aspect ratios $1.0 \leq p \leq 2.0$ are tabulated in Tables 1, 2 and 3 for the deflection, short-span moment and long-term moment coefficient values respectively.

2.7 Third approximation

For this approximation, the deflection function is written as follows:

$$w(x,y) = C_1\bar{w}_1 + C_2\bar{w}_2 + C_3\bar{w}_3 + C_4\bar{w}_4 + C_5\bar{w}_5 + C_6\bar{w}_6 \quad (24)$$

where $\bar{w}_1, \bar{w}_2, \bar{w}_3$ and $\bar{w}_4$ are defined by equations (17), (19) and (22) while

$$\left.\begin{aligned}\bar{w}_5 &= \bar{w}_1X^4 = (X - 2X^3 + X^4)(Y - 2Y^3 + Y^4)X^4\\ \bar{w}_6 &= \bar{w}_1Y^4 = (X - 2X^3 + X^4)(Y - 2Y^3 + Y^4)Y^4\end{aligned}\right\} \quad (25)$$

Therefore,

$$\begin{aligned}w(x,y) = {} & C_1(X - 2X^3 + X^4)(Y - 2Y^3 + Y^4) + C_2(X^3 - 2X^5 + X^6)(Y - 2Y^3 + Y^4)\\ & + C_3(X - 2X^3 + X^4)(Y^3 - 2Y^5 + Y^6) + C_4(X^3 - 2X^5 + X^6)(Y^3 - 2Y^5 + Y^6)\\ & + C_5(X^5 - 2X^7 + X^8)(Y - 2Y^3 + Y^4) + C_6(X - 2X^3 + X^4)(Y^5 - 2Y^7 + Y^8)\end{aligned} \quad (26)$$

Finally, equation (26) is substituted into equations (10) and (11) and the ensuing 6 X 6 algebraic equation is evaluated for the unknown coefficients in the deflection function. Subsequently, the determined coefficients are put in equation (26) to evaluate the deflection at any point of the plate. The moment coefficient values are in turn determined from equations 3 (a) and 3 (b). The results so obtained for aspect ratios $1.0 \leq p \leq 2.0$ are tabulated in Tables 1, 2 and 3 for the deflection, short-span moment and long-term moment coefficient values respectively.

3.0 Results and Discussions

3.1 Deflection

Table 1 shows the deflection coefficient values for the different approximations considered for plate aspect ratios $1.0 \leq p(b/a) \leq 2.0$ together with the results of the classical solution. The accuracy of the results obtained from the first approximation is good and the response pattern is also good. The percentage difference compared with the classical solution increased from 1.97 (at p = 1.0) to 4.54 (at p = 2.0). This shows minor divergence as the aspect ratio increases from 1.0 to 2.0. The deflection coefficient values are all in upper-bound. Remarkably, the second approximation does not yield more accurate results than the preceding one-term approximation. This shows that the response pattern is poor. Furthermore, it is observed that the percentage difference for deflection coefficient values range from 6.98 (at p = 1.0) to 21.41 (at p = 2.0). This indicates a sustained divergence as the aspect ratio increased from 1.0 to 2.0. A mix of lower-bounded and upper-bounded values is obtained by means of the truncated third approximation. The percentage difference with literature range from 4.42 (at p =1.0) to 0.7 (at p =1.3) and 1.01 (at p = 1.4) to 11.54 (at p = 2.0), showing a convergence from aspect ratio 1.0 to 1.3 and a divergence from 1.4 to 2.0. This is an improvement over the three-term deflection function. The first, second and truncated third approximations, just like the classical solutions, have their peak values at aspect ratio 2.0. The third approximation shows a marked difference from both the previous approximations and the classical solution. It equally, shows a very poor response pattern as the values deviate widely across the different aspect ratios considered.

3.2 Short Span Moment

The short span moment coefficient values as well as the results of the classical solution are shown in Table 2 for aspect ratios $1.0 \leq p \leq 2.0$. The first approximation gave coefficient values that are all upper-bounded. As would be expected, the deflection coefficient values are evaluated to a higher degree of accuracy than the moment coefficient values. This is due to the fact that the stress couples are proportional to the second derivatives of the deflection functions. As a result, the percentage difference for the first approximation ranges from 7.79 (at p = 1.0) to 6.27 (at p = 1.5) and from 6.46 (at p = 1.6) to 7.44 (at p = 2.0). This shows the coefficient values converged from aspect ratio 1.0 to 1.5 and the diverged from 1.6 to 2.0. However, the second approximation moment coefficient values did show a mixed response compared to the one-term approximation- some lower-bounded, others upper-bounded. The percentage difference ranges from 2.42 (at p = 1.0) to 0.41 (at p =1.4) and from 2.4 (at p =1.5) to 13.19 (at p = 2.0). This shows a convergence from aspect ratio 1.0 to 1.4 and a divergence from 1.5 to 2.0. For the truncated third approximation, all the coefficient values are lower-bounded. The percentage difference ranges from 22.6 (at p = 1.0) to 25.51 (at p = 2.0) having its highest divergence at aspect ratio 1.7 (26.39%). This is not an improvement over the second approximation. The third approximation shows a mix of lower and upper-bounded coefficient values. All aspect ratios indicate a wide divergence from the results of classical solution.

Table 1: Mid-span (X =0.5, Y =0.5) Deflection Coefficient Values, α, for All Edges Simply Supported Rectangular Plate at Varying Aspect ratios ($W_{max} = (\alpha q a^4/D)$).

Aspect ratio, P	Present Study				Classical Solution
	W_1	W_2	W_3	W_4	W
	First Approximation	Second Approximation	Truncated Third Approximation	Third Approximation	Timoshenko &Woinowsky-Krieger (1970)
1.0	0.00414(1.97%)	0.00434(6.98%)	0.00388(-4.42%)	-0.00215(-153.04%)	0.00406
1.1	0.00496(2.27%)	0.00533(9.95%)	0.00470(-3.00%)	-0.00169(-134.80%)	0.00485
1.2	0.00576(2.13%)	0.00632(12.09%)	0.00553(-2.00%)	-0.00087(-115.44%)	0.00564
1.3	0.00653(2.35%)	0.00728(14.17%)	0.00634(-0.70%)	0.00044(-93.16%)	0.00638
1.4	0.00726(2.98%)	0.00820(16.30%)	0.00712(1.01%)	0.00235(-66.70%)	0.00705
1.5	0.00793(2.72%)	0.00905(17.29%)	0.00788(2.08%)	0.00498(-35.46%)	0.00772
1.6	0.00856(3.13%)	0.00984(18.59%)	0.00861(3.76%)	0.00848(2.19%)	0.00830
1.7	0.00913(3.40%)	0.01056(19.60%)	0.00932(5.53%)	0.01302(47.43%)	0.00883
1.8	0.00966(3.76%)	0.01121(20.38%)	0.01000(7.40%)	0.01880(101.95%)	0.00931
1.9	0.01015(4.21%)	0.01179(21.00%)	0.01066(9.43%)	0.02610(167.97%)	0.00974
2.0	0.01059(4.54%)	0.01230(21.41%)	0.01130(11.54%)	0.03525(247.97%)	0.01013

*values in bracket are the percentage difference between the present study and the classical solution.

Table 2: Short Span Moment Coefficient Values, β_x, at Mid-Span (X =0.5, Y =0.5) for All Edges Simply Supported Rectangular Plate at Varying Aspect ratios ($(M_x)_{max} = qa^2\beta_x$).

Aspect ratio, P	Present Study				Classical Solution
	Mx1	Mx2	Mx3	Mx4	Mx
	First Approximation	Second Approximation	Truncated Third Approximation	Third Approximation	Timoshenko and Woinowsky-Krieger (1970)
1	0.05163(7.79%)	0.04906(2.42%)	0.03704(-22.67%)	-0.26397(-651.08%)	0.04790
1.1	0.05943(7.27%)	0.05702(2.93%)	0.04253(-23.23%)	-0.23126(-517.44%)	0.05540
1.2	0.06686(6.63%)	0.06410(2.23%)	0.04756(-24.15%)	-0.20821(-432.07%)	0.06270
1.3	0.07383(6.38%)	0.07016(1.09%)	0.05213(-24.89%)	-0.18432(-365.60%)	0.06940
1.4	0.08031(6.37%)	0.07519(-0.41%)	0.05628(-25.46%)	-0.15520(-305.57%)	0.07550
1.5	0.08629(6.27%)	0.07925(-2.40%)	0.06007(-26.03%)	-0.11808(-245.42%)	0.08120
1.6	0.09177(6.46%)	0.08242(-4.38%)	0.06357(-26.26%)	-0.07058(-181.88%)	0.08620
1.7	0.09677(6.57%)	0.08481(-6.60%)	0.06683(-26.39%)	-0.01023(-111.27%)	0.09080
1.8	0.10134(6.90%)	0.08651(-8.74%)	0.06993(-26.24%)	0.06578(-30.61%)	0.09480
1.9	0.10549(7.10%)	0.08764(-11.02%)	0.07289(-26.00%)	0.16087(63.32%)	0.08850
2	0.10927(7.44%)	0.08829(-13.19%)	0.07576(-25.51%)	0.27921(174.54%)	0.10170

*values in bracket are the percentage difference between the present study and the classical solution.

3.3 Long Span Moment Coefficients

Table 3 shows the results of the long span moment coefficients for the present formulation along with the results of the classical solution. The results of both the first and second approximation coefficient values are upper-bounded. The percentage difference for the first approximation ranges from 7.79 (at p = 1.0) to 20.50 (at p = 2.0). The percentage difference for the second approximation ranges from 53.89 (at p = 1.0) to 103.8 (at p = 1.6) and from 103.63 (at p =1.7) to 95.76 (at p = 2.0). This means the coefficient values diverged from aspect ratio 1.0 to 1.6 and then converged from 1.7 to 2.0. This is not an improvement over the one-term approximation. The truncated third approximation coefficient values did show an improvement over the second approximation as the percentage difference ranges from 1.37 (at p = 1.1) to 54.06 (at p= 2.0). The coefficient values are mainly upper-bounded. The third approximation shows the worst response pattern of all the approximations considered with a percentage difference as much as 1205.22 at aspect ratio 2.0. All coefficient values for this approximation are widely divergent.

Table 3: Long Span Moment Coefficient Values, β_y, at Mid-Span (X =0.5, Y =0.5) for All Edges Simply Supported Rectangular Plate at Varying Aspect ratios ($(M_y)_{max} = qa^2\beta_y$).

Aspect ratio, p	Present Study				Classical Solution
	My1	My2	My3	My4	My
	First Approximation	Second Approximation	Truncated Third Approximation	Third Approximation	Timoshenko and Woinowsky-Krieger (1970)
1	0.05163(7.79%)	0.07372(53.89%)	0.04344(-9.32%)	-0.35267(-836.26%)	0.04790
1.1	0.05364(8.80%)	0.08338(69.13%)	0.04863(-1.37%)	-0.22930(-565.12%)	0.04930
1.2	0.05502(9.82%)	0.09083(81.29%)	0.05311(6.01%)	-0.13988(-379.20%)	0.05010
1.3	0.05591(11.15%)	0.09602(90.89%)	0.05692(13.17%)	-0.06142(-222.10%)	0.05030
1.4	0.05643(12.41%)	0.09912(97.45%)	0.06013(19.78%)	0.01466(-70.80%)	0.05020
1.5	0.05668(13.82%)	0.10043(101.67%)	0.06282(26.15%)	0.09269(86.12%)	0.04980
1.6	0.05673(15.30%)	0.10027(103.80%)	0.06510(32.31%)	0.17557(256.85%)	0.04920
1.7	0.05664(16.54%)	0.09896(103.63%)	0.06704(37.94%)	0.26575(446.81%)	0.04860
1.8	0.05645(17.85%)	0.09680(102.08%)	0.06871(43.45%)	0.36564(663.33%)	0.04790
1.9	0.05620(19.32%)	0.09402(99.62%)	0.07018(49.00%)	0.47790(914.65%)	0.04710
2	0.05591(20.50%)	0.09083(95.76%)	0.07148(54.06%)	0.60562(1205.22%)	0.04640

*values in bracket are the percentage difference between the present study and the classical solution.

4.0. Conclusion

This study has considered four different polynomial approximations having one, three, four and six terms respectively for the deflection function of the all-round simply supported rectangular isotropic plate subjected to a uniformly distributed load. The Galerkin method was used for the analysis of the plate for aspect ratios $1.0 \leq p \leq 2.0$. It is note-worthy that the increase in the number of terms of the polynomial deflection functions did not always give an improved accuracy and convergence of the present formulation. The one-term deflection function of the first approximation gave coefficient values that were upper-bounded for all aspect ratios considered for the maximum deflection and maximum span-moment coefficient values.

The second approximation showed upper-bounded values for the maximum deflection and maximum long span moment coefficient values while the maximum short span moment coefficient values showed a mix of upper and lower-bounded coefficient values. The truncated third approximation showed a mix of upper and lower-bounded coefficient values for the maximum deflection and the two maximum span moment coefficient values with notable percentage difference with the classical solution. The third approximation showed wide divergence for the maximum deflection and maximum span moment coefficient values considered. The one-term deflection function of the first approximation gave the best accuracy of all the different approximations undertaken in this study followed by the three-term deflection function of the second approximation. Therefore, it is concluded that it cannot be taken for granted that an increase in the number of terms yields a better accuracy and convergence of the solutions. Nevertheless, the results of the first and second approximations are useful for majority of engineering purposes and should be applied with confidence in any engineering problem as the need arises.

5.0 Recommendation

Further research work should explore different approximation technique on characteristic coordinate polynomialsand compare the results with that of classical solution.

References

Aginam, C. H., Chidolue, C. A., Ezeagu, C. A., 2012. Application of direct variational methodin the analysis of isotropic thin rectangular plates. *ARPN Journal of Engineering and Applied Sciences*, 7(9), 1128-1138.

Ajagbe, W. O., Rufai, O. A., Labiran, J. O., 2014.Finite element analysis of a free-standing staircase. *Nigerian Journal of Technology (NIJOTECH)*, 33(4), 610-617.

Baraigi, N. K., 1986. *A textbook of plate analysis*.Khanna, Delhi.

Birman, V., 2011. *Plate Structures*. SpringerNetherlands, New York.

Hutchinson, J. R., 1992. On the bending ofrectangular plates with two opposite edges simply supported. *J. Appl. Mech. Trans. ASME*,59, 679-681.

Imrak, C. E., Gerdemeli, I., 2007. An exact solution for the deflection of a clamped rectangular plate under uniform load. *Applied Mathematical Sciences*, 1(43), 2129-2137.

Lekhnitskii, S. G., 1968. *Anisotropic plates*. Gordon and Breach, New York.

Mikhlin, S. G., 1964. *Variational methods in mathematical physics*.Pergamon press, Oxford.

Ragesh, P. P., Mustafa, V., Somasundaran, T. P.,2014. An integrated Kirchhoff plate elementby Galerkin method for the analysis ofplates onelastic foundation. *IOSR Journal of Mechanical and Civil Engineering (IOSR-JMCE).*Availableat: http://www.iosrjournals.org/ (Accessed: 19 December 2018)

Szilard, R., 2004. *Theories and Application of plate analysis*. John Wiley & sons, inc., New jersey.

Timoshenko, S. P., Woinowsky-Krieger, S.,1959. *Theory of plates and shell*.McGraw-Hill Inc, New York.

Timoshenko, S. P., Woinowsky-Krieger, S.,1970. *Theory of plates and shells*.McGraw-Hill Inc, Singapore.

Vanam, B. C. L., Rajyalakshmi, M., Inala, R.,2012. Static analysis of an isotropicrectangularplate using finite element analysis. *Journal of Mechanical Engineering Research*, 4(4), 148-162.

Ventsel, E., Krauthammer, T., 2001. *Thin plates and shells: Theory, Analysis and Applications*.Marcel Dekker Inc, New York.

Wang, D., El-Sheikh, A. I., 2005. Large deflection mathematical analysis of rectangularplate.*J. Eng. Mech*., 131, 809-821.

Zhong, Y., Xu, Q., 2017. Analysis bending solutions of clamped rectangular thick plate.*Mathematical Problems in Engineering.* Available at:http://doi.org/10.1155/2017/7539276(Accessed: 06 December 2018).