UJEAS

UNIZIK JOURNAL OF ENGINEERING AND APPLIED SCIENCES

UNIZIK Journal of Engineering and Applied Sciences 6(1), March (2026), 3382-3394
Journal homepage: https://journals.unizik.edu.ng/index.php/ujeas
PRINT ISSN: 2992-4383 || ONLINE ISSN: 2992-4391

Enhancing dynamic line rating using fuzzy based ultracapacitor

Nwogbu Celestine Chidi[1] Chukwuagu Ifeanyi[2] Adindu Charles .O[3]
[1]Material and Metallurgy Department Enugu State University of Science and Technology, Enugu
[2] Department of Electrical/Electronic Engineering, Caritas University Amorji-Nike, Emene, Enugu.
[3] Department of Electrical/Electronic Engineering, OSISATECH Polytechnic OWO Enugu state
*Corresponding Author's E-mail: chukwuaguifeanyi35@gmail.com

Abstract
The efficiency and reliability of power transmission networks are increasingly challenged by the limitations of static line ratings, which often lead to underutilization of transmission capacity and increased congestion. This research focuses on Enhancing Dynamic Line Rating (DLR) Using Fuzzy-Based Ultracapacitor Technology to address these challenges. The proposed system integrates a fuzzy logic controller with an ultracapacitor energy storage system to provide rapid and intelligent support to transmission lines under fluctuating environmental and load conditions. The fuzzy controller dynamically assesses real-time parameters such as conductor temperature, wind speed, and solar radiation to optimize the use of the ultracapacitor, thereby enhancing the dynamic line capacity safely and efficiently. Simulation results demonstrate that the fuzzy-based ultracapacitor system significantly improves the responsiveness of DLR mechanisms, reduces thermal overload risks, and maximizes line utilization without compromising system stability. The study offers a novel approach for modernizing power transmission infrastructure, enabling smarter, more adaptive grid operations, and paving the way for higher integration of renewable energy sources. The findings suggest that intelligent energy storage-based compensation can be a key driver in the future development of resilient and efficient transmission networks. The conventional High Ambient Temperature that causes poor dynamic line rating was25%. On the other hand, when Fuzzy based ultracapacitor was incorporated into the system, it drastically reduced to21.7% and the conventional high solar radiation that causes poor dynamic line rating was 10%. Meanwhile, when Fuzzy based ultracapacitor was imbibed into the system, it simultaneously reduced to8.7%. Finally, with these results obtained, it showed that percentage enhancement dynamic line rating when Fuzzy based ultracapacitor was integrated in the system was 1.3%.

Keywords: Enhancing, dynamic, line, rating, fuzzy, based, ultracapacitor

1. Introduction

The increasing global demand for electricity and the integration of renewable energy sources have placed significant pressure on existing power transmission infrastructures. Transmission lines are traditionally operated based on static line rating (SLR), which assumes conservative environmental conditions such as high ambient temperature, low wind speed, and maximum solar radiation. Although this approach ensures operational safety, it often underutilizes the actual capacity of transmission lines, thereby limiting the efficiency of power delivery systems (Zhou et al., 2025). Dynamic Line Rating (DLR) has emerged as a modern solution to address this challenge by estimating the real-time current-carrying capacity of transmission lines based on actual environmental conditions such as wind speed, ambient temperature, and solar radiation. By utilizing real-time meteorological data, DLR allows utilities to increase transmission capacity without the need for costly infrastructure expansion (Baishya & Patowary, 2024). Despite its advantages, the practical implementation of DLR systems faces several challenges. The thermal behavior of conductors varies significantly due to uncertainties in environmental conditions, which can lead to inaccurate estimation of transmission capacity and potential reliability issues.

Researchers have therefore explored intelligent computational techniques to improve the accuracy and adaptability of DLR systems. Among these techniques, fuzzy logic control has gained considerable attention because of its ability to

handle uncertainties and nonlinear relationships in complex engineering systems. Fuzzy-based models can effectively incorporate uncertain meteorological parameters and operational variables to provide more reliable predictions of conductor temperature and line ampacity in power transmission networks (Yaqoob et al., 2022). In addition to intelligent control strategies, the incorporation of advanced energy storage devices has become an important strategy for improving the operational flexibility of modern power systems. Ultra-capacitors (also known as supercapacitors) possess high power density, rapid charge–discharge capability, and long cycle life, making them suitable for supporting dynamic power control in electrical systems. Recent studies have demonstrated that integrating ultra-capacitors with intelligent controllers can significantly enhance power stability, energy management, and dynamic response in hybrid power systems (Sharma et al., 2022; Akar, 2022). These characteristics make ultra-capacitors particularly suitable for applications that require fast energy compensation, such as transmission line thermal regulation and dynamic power balancing. Furthermore, modern power networks are becoming increasingly complex due to the penetration of distributed generation and renewable energy systems. These developments introduce fluctuating power flows that can cause sudden variations in transmission line loading.

Intelligent control methods such as fuzzy logic have been widely investigated for managing such variability because they can emulate human reasoning and make adaptive decisions under uncertain operating conditions. Research has shown that fuzzy-based systems can effectively optimize operational parameters, reduce power fluctuations, and enhance system stability in grid-connected energy systems (Oubelaid et al., 2022). Although several studies have investigated dynamic line rating techniques, most existing approaches focus primarily on weather-based estimation models or machine learning prediction systems. These methods often neglect the integration of fast-response energy storage devices that can dynamically regulate power flow and stabilize conductor thermal conditions during transient overload situations. Moreover, previous research on fuzzy-based DLR systems mainly concentrates on improving the estimation accuracy of conductor temperature and thermal aging, with limited attention given to integrating intelligent energy storage technologies such as ultra-capacitors for real-time thermal and power management. Therefore, the novelty of this study lies in the enhancement of dynamic line rating using a fuzzy-based ultra-capacitor framework. The proposed approach combines fuzzy logic control with ultra-capacitor energy storage to provide adaptive regulation of transmission line loading conditions.

By incorporating the rapid energy response capability of ultra-capacitors with the intelligent decision-making capability of fuzzy systems, the proposed model aims to improve transmission capacity utilization, reduce thermal stress on conductors, and enhance the reliability of power transmission networks. In conclusion, while significant progress has been made in dynamic line rating methodologies, a critical gap remains in the integration of intelligent control algorithms with advanced energy storage technologies for real-time line rating enhancement. Existing literature largely focuses on environmental monitoring and predictive algorithms without adequately addressing active power compensation and thermal regulation using energy storage systems. This study addresses this gap by proposing an innovative fuzzy-based ultra-capacitor approach for enhancing dynamic line rating, thereby providing a more adaptive, reliable, and efficient solution for modern power transmission systems. The study contributes to the advancement of intelligent grid technologies by introducing a hybrid framework that combines real-time thermal rating estimation with rapid energy stabilization mechanisms.

2.0 Materials and methods

Characterization and establishment of the causes of poor dynamic line rating is shown in Table 1.

Table1: Characterized and established the causes of poor dynamic line rating

S/N	Cause of Poor DLR	Typical Value / Range	Unit (S.I.)	Estimated Contribution to Poor DLR
1	High Ambient Temperature	35 – 45	°C	25%
2	Low Wind Speed	0 – 1.5	m/s	20%
3	High Solar Radiation	600 – 1000	W/m²	10%
4	Excessive Line Current	900 – 1200	A	15%
5	Conductor Surface Contamination	Increased emissivity (0.6 – 0.9)	—	5%

6	Poor Real-Time Monitoring Infrastructure	Low data refresh rate (5 – 10)	minutes	8%
7	Absence of Adaptive Control (e.g., FLC)	Manual/Fixed Ratings Used	—	7%
8	Poor Sag-Tension Management	Sag increase: 0.5 – 1.2	meters	5%
9	Uncoordinated Load Dispatch	Load variation: ±20%	%	3%
10	Aging Infrastructure	Age: 25 – 40	years	2%

Ambient temperature influences conductor cooling and consequently reduces ampacity, while wind speed enhances convective cooling, although low speeds limit this effect. Solar radiation introduces additional thermal load on the conductor, and line current contributes directly to Joule heating. Surface contamination modifies thermal emissivity, thereby affecting heat dissipation, and real-time monitoring is necessary for dynamically adjusting line ratings. Fuzzy Logic Controllers (FLC) are essential for intelligent adaptation, which is often lacking, whereas poor sag-tension control results in reduced safety margins and inaccurate ratings. Furthermore, load dispatch variability introduces uncertainty in thermal loading, and aging assets are typically rated conservatively, limiting DLR potential.

2.1 Designing a conventional SIMULINK model for dynamic line rating

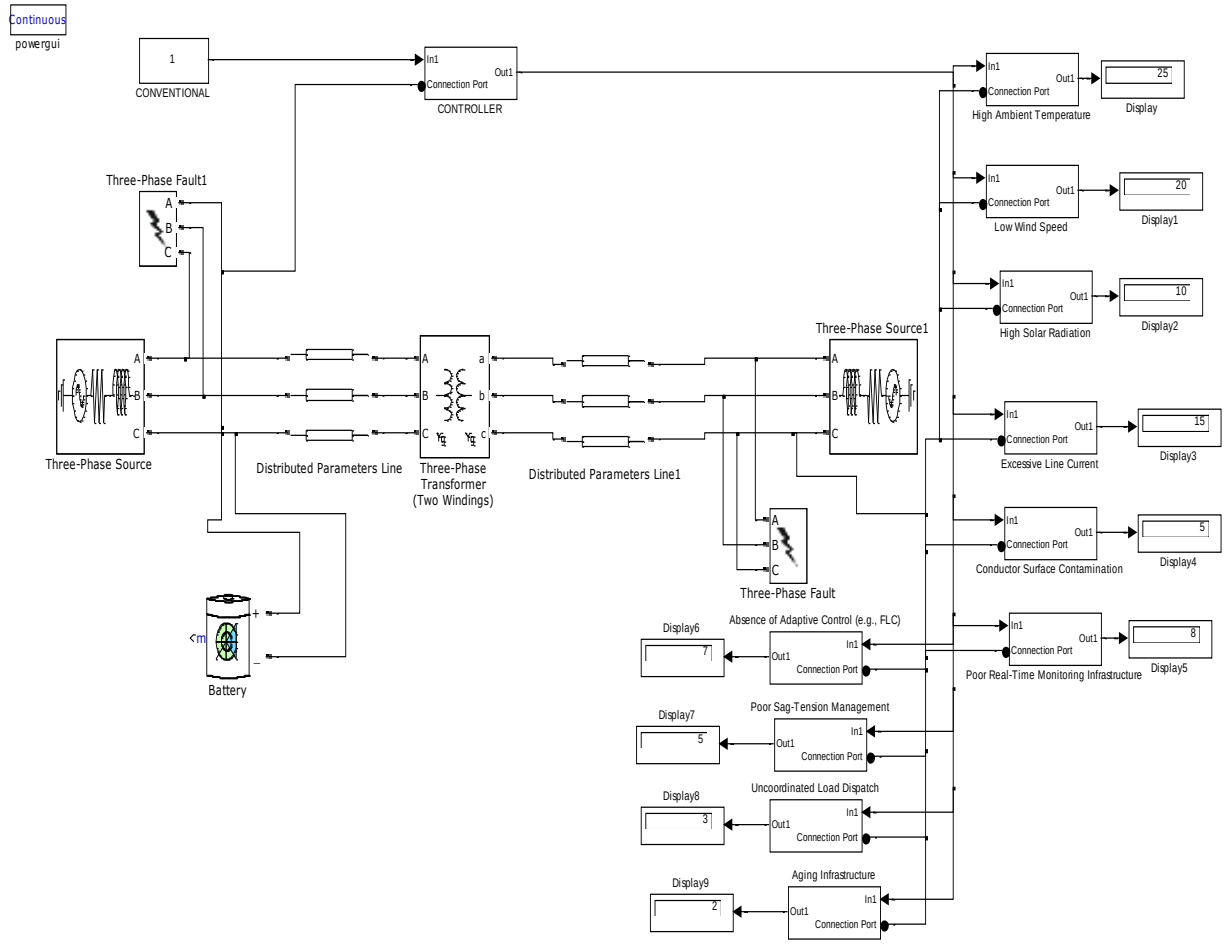

Figure 1: Designed a conventional SIMULINK model for dynamic line rating

Figure 1 illustrates a simulated electrical power system model configured in a continuous environment. It comprises interconnected blocks representing a three-phase source, transmission lines, transformers, and load components arranged in sequence. Measurement and connection ports are distributed across the system to monitor voltage, current, and other parameters at different nodes. Additional input blocks introduce varying numerical values to emulate changing operating conditions. A control or disturbance element is also integrated to assess system response. The results obtained were as shown in Figures 2 and 3. Developing an ultracapacitor rule base that will minimize the causes of poor dynamic line rating.

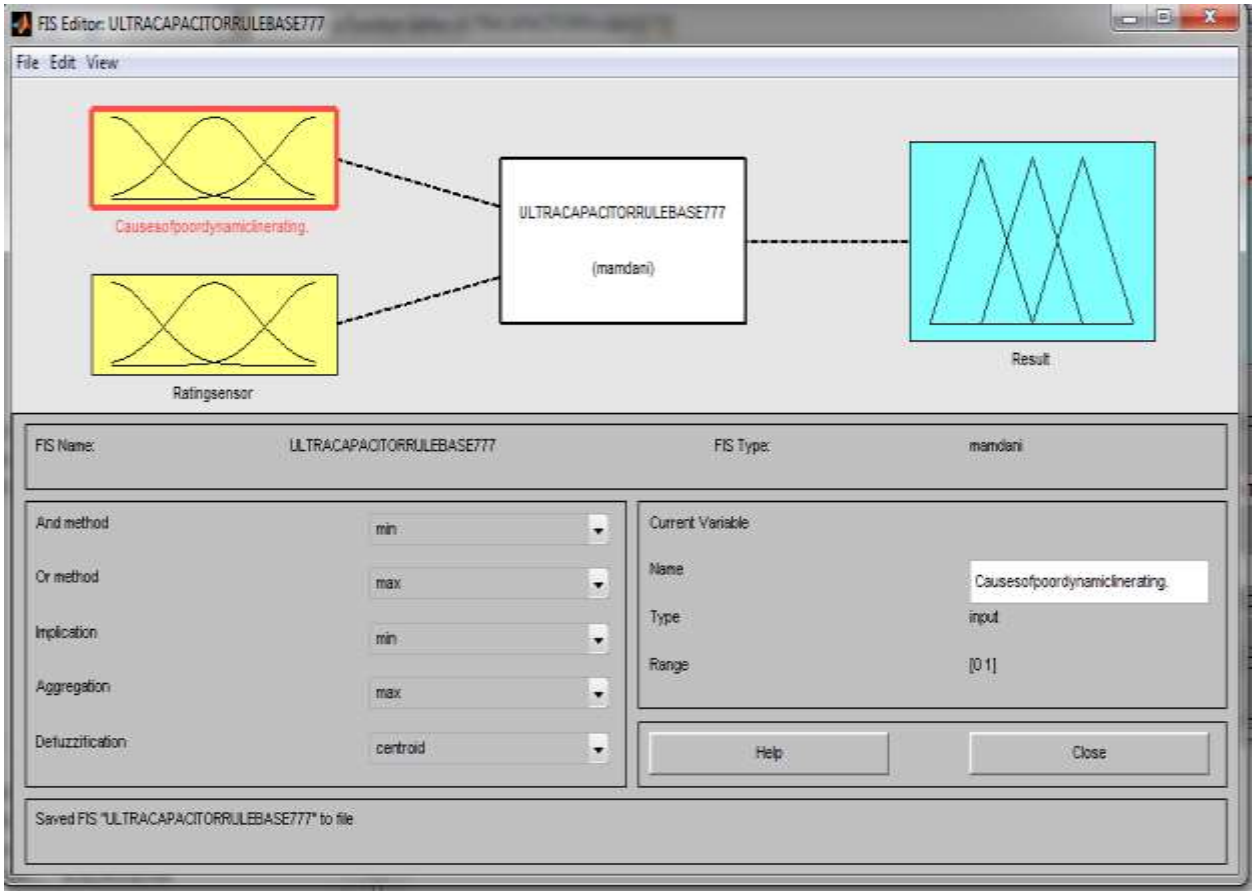

Figure 2: Developed ultracapacitor fuzzy inference system that will minimize the causes of poor dynamic line rating.

Figure 2 shows a Fuzzy Inference System (FIS) Editor configured using the Mamdani approach for an ultracapacitor-based dynamic line rating model. Two input variables, labeled “Causes of poor dynamic line rating” and “Rating sensor,” are represented with overlapping membership functions, indicating fuzzification of input data. These inputs are processed through a defined rule base named “ULTRACAPACITORRULEBASE777.” The output section, labeled “Result,” displays triangular membership functions representing system responses. Key settings include AND method (min), OR method (max), implication (min), aggregation (max), and defuzzification using the centroid method. The system is designed for intelligent decision-making under uncertain operating conditions. This had two inputs of causes of poor dynamic line rating and rating sensor. It also had an output of results.

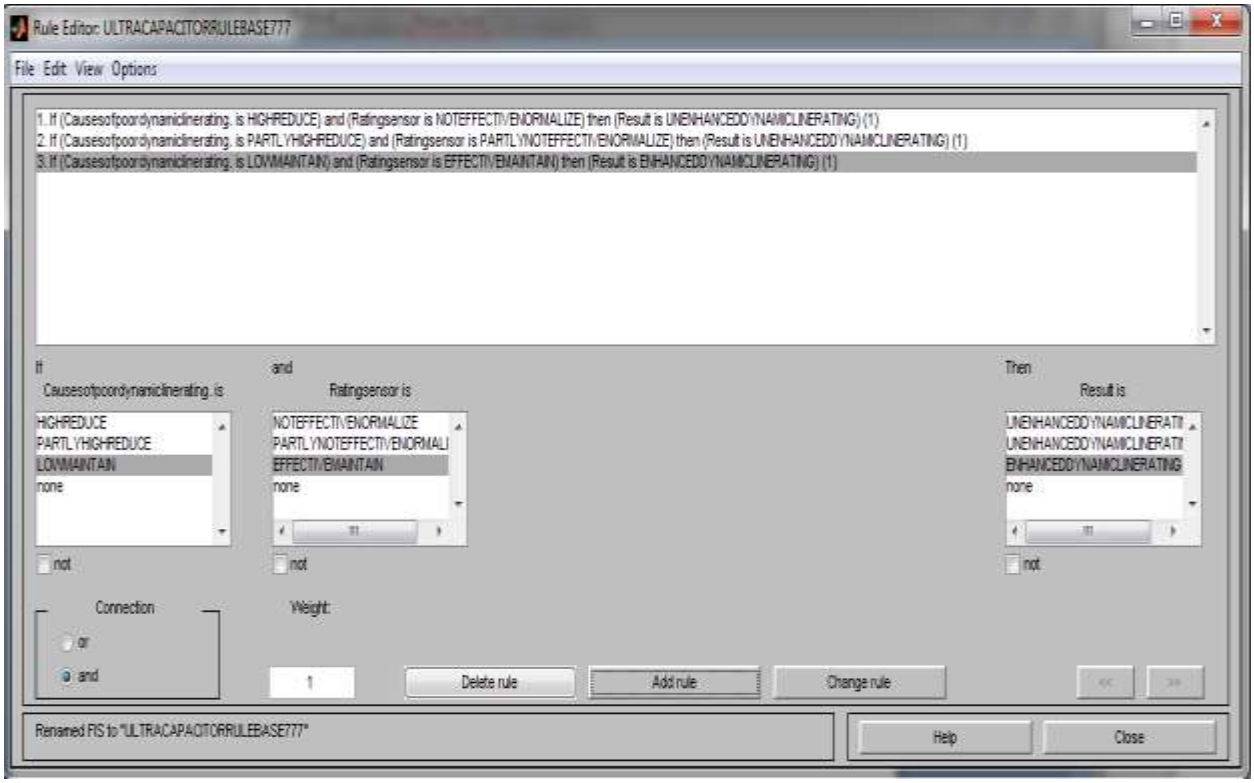

Figure 3: Developed ultracapacitor rule base that will minimize the causes of poor dynamic line rating.

Figure 3 presents the Rule Editor of a Mamdani-based Fuzzy Inference System titled "ULTRACAPACITORRULEBASE777." It defines logical rules that map input conditions to output decisions for dynamic line rating. Two inputs, "Causes of poor dynamic line rating" and "Rating sensor," are combined using AND logic to determine the system output. The rules specify conditions such as high or partial reduction and sensor effectiveness levels, leading to either unenhanced or enhanced dynamic line rating outcomes. Each rule carries equal weight, ensuring balanced influence. The interface allows modification, addition, or deletion of rules, supporting flexible and adaptive decision modeling under uncertain operating environments. The rules were comprehensively enumerated in table 3

Table 3: Comprehensively enumerated developed ultracapacitor rule base that will minimize the causes of poor dynamic line rating.

1	IF causes of poor dynamic line rating IS HIGH REDUCE.	AND RATING SENSOR IS NOT EFFECTIVE NORMALIZED	THEN RESULT IS UN ENHANCED DYNAMIC LINE RATING
2	IF causes of poor dynamic line rating IS PARTLY HIGH REDUCE.	AND RATING SENSOR IS PARTLY NOT EFFECTIVE NORMALIZED	THEN RESULT IS UN ENHANCED DYNAMIC LINE RATING
3	IF causes of poor dynamic line rating IS LOW MAINTAIN	AND RATING SENSOR IS EFFECTIVE MAINTAIN	THEN RESULT IS ENHANCED DYNAMIC LINE RATING

Table 3 presents a systematically developed ultracapacitor-based fuzzy rule set designed to mitigate the causes of poor dynamic line rating. The rules integrate two key inputs: the severity of factors affecting dynamic line rating and the effectiveness of the rating sensor. When the causes are highly reduced but the sensor remains ineffective, the system yields an unenhanced dynamic line rating. Similarly, partially reduced causes combined with partially ineffective sensing also produce an unenhanced outcome. However, when the causes are minimal and the sensor operates effectively, the system responds with an enhanced dynamic line rating, reflecting improved operational performance and reliability.

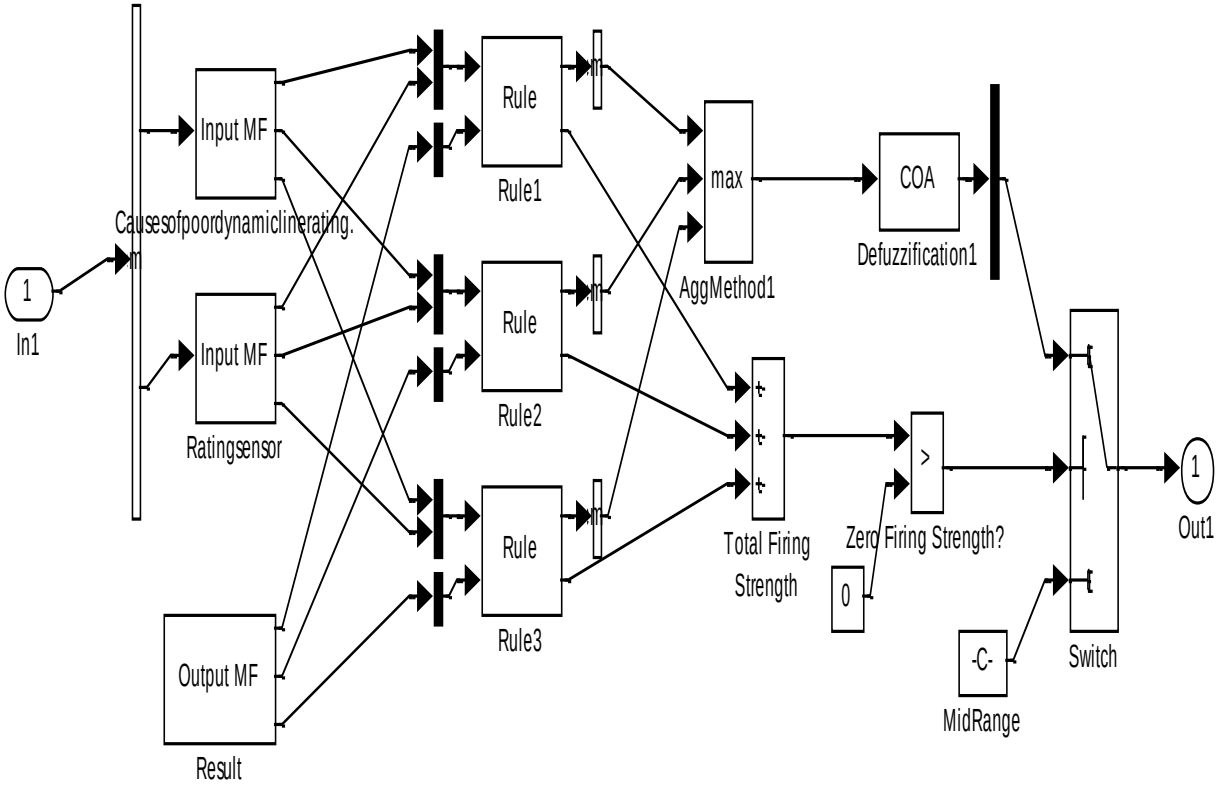

Figure 4: the operational mechanism of developed ultracapacitor rule base that will minimize the causes of poor dynamic line rating.

Figure 4 illustrates a fuzzy logic control system. It begins with input signals processed through input membership functions (Input MF), which convert crisp inputs into fuzzy values. These values are evaluated by a set of rules that represent the system's decision logic. The outputs of the rules are combined using an aggregation method, such as max, to form a unified fuzzy output. This aggregated result passes through defuzzification (COA – Center of Area) to produce a crisp output value. Additional blocks indicate summation, comparison, and scaling processes, refining the final output signal generated by the system for control purposes.

2.2 Designing a SIMULINK model for ULTRACAPACITOR

Figure 5 represents a signal processing or simulation model, likely built in a block-based environment. It includes multiple input sources, constants, and functional blocks such as sine wave generation ($\sin(2\pi u)$), gain ($\times$), and switching or routing elements. Signals are combined and directed through subsystems labeled with input/output ports (in1, in2, out1, etc.). A connection port links different parts of the model, enabling modular design. Additional blocks perform mathematical operations, comparisons, or transformations. The processed signals are visualized using a scope-like display, showing waveform outputs. Overall, the system demonstrates structured signal flow, modular subsystems, and real-time data visualization.

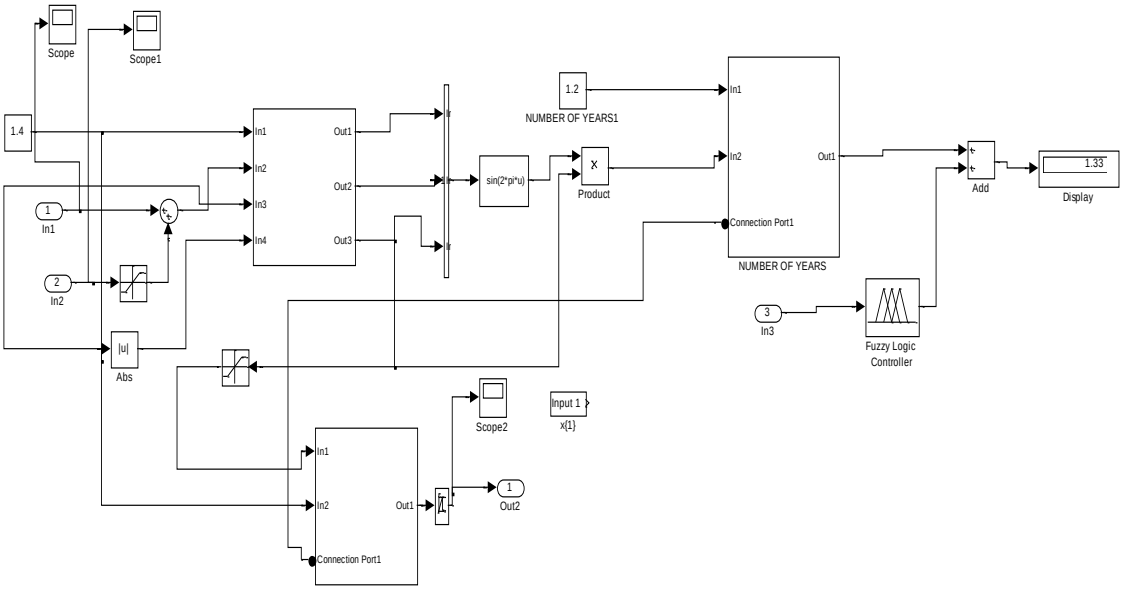

Figure 5: Designed SIMULINK model for ULTRACAPACITOR

Designing a conventional SIMULINK model for dynamic line rating

Developing an algorithm that will implement the process

1. Characterize and establish the causes of poor dynamic line rating.
2. Identify High Ambient Temperature
3. Identify Low Wind Speed
4. Identify High Solar Radiation
5. Identify Excessive Line Current
6. Identify Conductor Surface Contamination
7. Identify Poor Real-Time Monitoring Infrastructure
8. Identify Absence of Adaptive Control (e.g., FLC)
9. Identify Poor Sag-Tension Management
10. Identify Uncoordinated Load Dispatch
11. Identify Aging Infrastructure
12. Design a conventional SIMULINK model for dynamic line rating and integrate 2 through 11.
13. Develop an ultracapacitor rule base that will minimize the causes of poor dynamic line rating.
14. Design a SIMULINK model for ULTRACAPACITOR
15. Integrate 13 and 14
16. Integrate 15 into 12
17. Did the causes of poor dynamic line rating? reduce when 15 was integrated into 12?
18. IF NO go to 16
19. IF YES go to 20
20. Enhanced dynamic line rating
21. Stop
22. End

2.3 Designing a SIMULINK model for enhancing dynamic line rating using fuzzy based ultracapacitor

Figure 6 shows a comprehensive Simulink-based power and control system model. It integrates electrical components such as three-phase sources, transformers, transmission lines, and loads, along with measurement blocks for voltage

and current monitoring. Signals flow through connection ports and subsystems, enabling modular design and organized data handling. Additional blocks perform mathematical operations, waveform generation, and signal conditioning, including sine functions and gain elements. Outputs are displayed using numeric indicators and scope-like visualizations. The lower section highlights a control subsystem processing inputs and generating control signals.

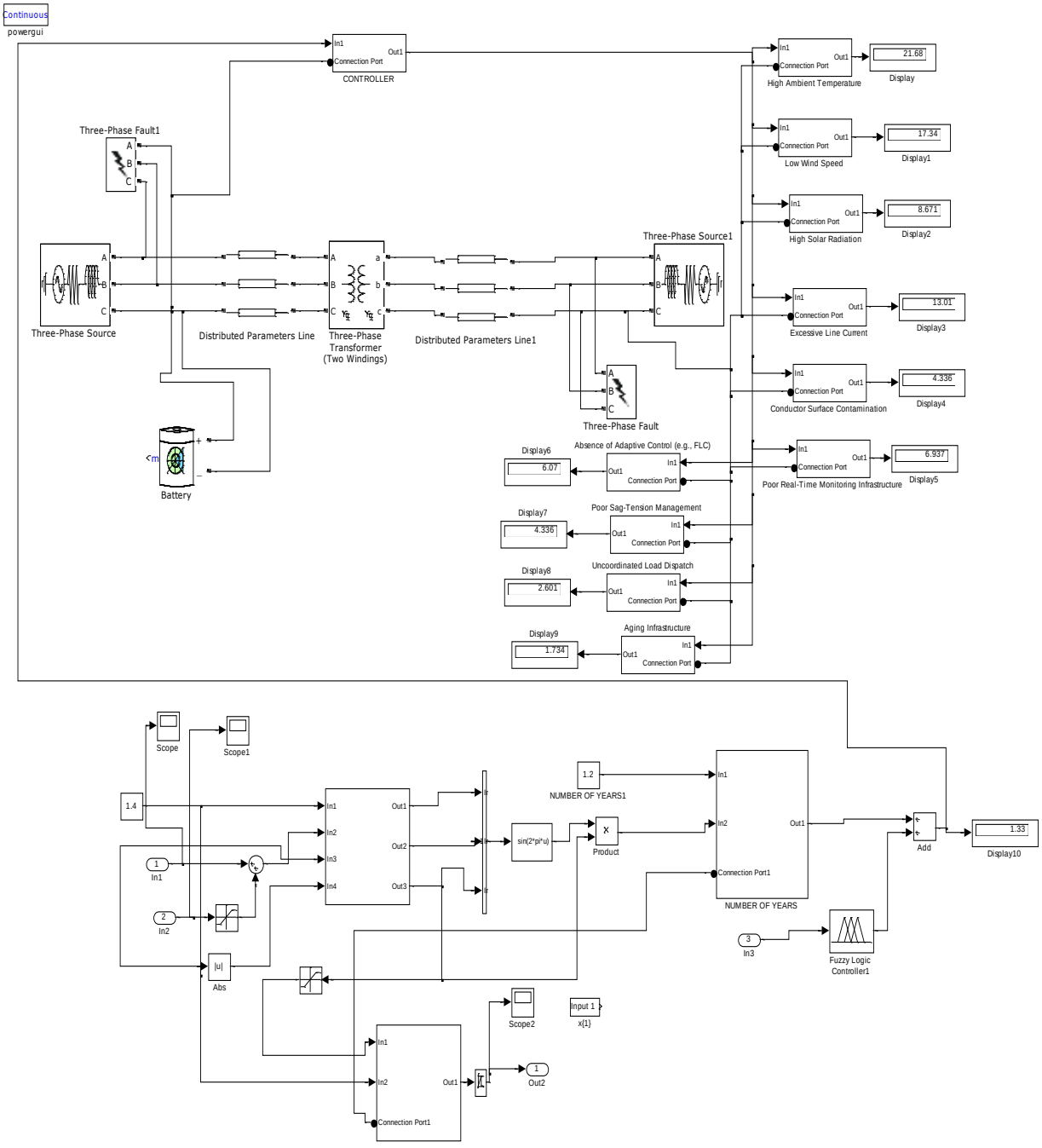

Figure 6: designed SIMULINK model for enhancing dynamic line rating using fuzzy based ultracapacitor

3.0 Result and Discussion

The validation of percentage improvement focuses on comparing the reduction in factors causing poor dynamic line rating under conventional conditions and with a fuzzy-based ultracapacitor system. For high ambient temperature, the conventional contribution is 25%, while the fuzzy-based ultracapacitor reduces it to 21.7%. This results in an improvement of 3.3% in mitigating the impact of ambient temperature. Similarly, for high solar radiation, the conventional value of 10% is reduced to 8.7% with the fuzzy-based ultracapacitor. This indicates a 1.3% improvement. These results demonstrate that the fuzzy-based ultracapacitor effectively reduces key environmental factors affecting dynamic line rating performance. The results obtained were as shown in Figures 7 and 8.

Table 3: Comparison of conventional and Fuzzy based ultracapacitor High Ambient Temperature that causes poor dynamic line rating

Time(s)	Conventional High Ambient Temperature that causes poor dynamic line rating (%)	Fuzzy based ultracapacitor High Ambient Temperature that causes poor dynamic line rating (%)
1	25	21.7
2	25	21.7
3	25	21.7
4	25	21.7
10	25	21.7

Table 3 presents a comparison of high ambient temperature effects on dynamic line rating under conventional conditions and with a fuzzy-based ultracapacitor over time. At all observed time intervals (1 s to 10 s), the conventional system consistently records a value of 25%, indicating a steady and unmitigated impact of ambient temperature. In contrast, the fuzzy-based ultracapacitor maintains a reduced and stable value of 21.7% across the same period. This consistent reduction demonstrates the effectiveness of the fuzzy-based approach in mitigating temperature-related impacts, improving system performance, and enhancing reliability without fluctuations over time.

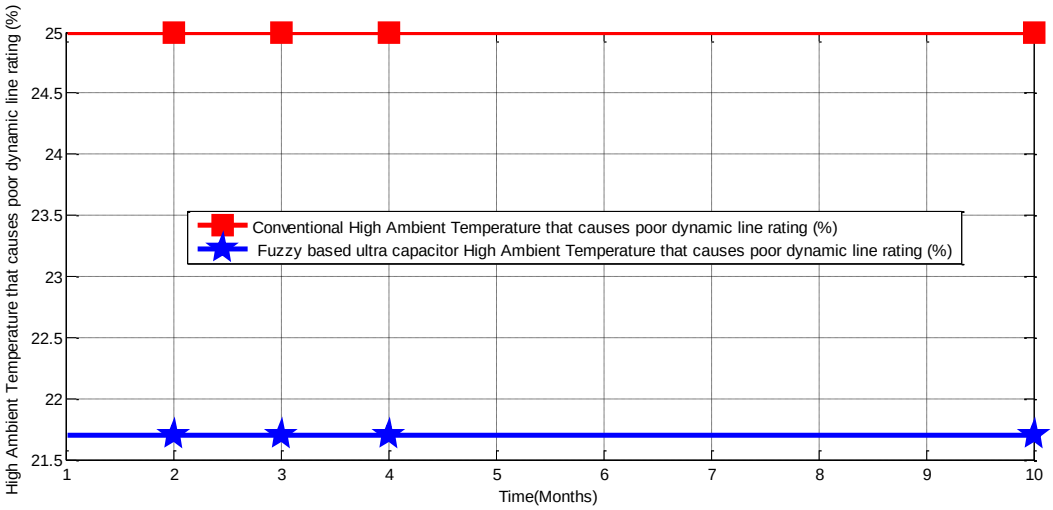

Figure 7: comparison of conventional and Fuzzy based ultracapacitor High Ambient Temperature that causes poor dynamic line rating

Figure 7 illustrates the comparison between conventional and fuzzy-based ultracapacitor approaches in mitigating high ambient temperature effects on dynamic line rating. The conventional method remains constant at a higher value of 25% across all time intervals, indicating no improvement in reducing temperature impact. In contrast, the fuzzy-based ultracapacitor consistently maintains a lower value of 21.7%, demonstrating effective mitigation. The clear gap between the two curves highlights the superiority of the fuzzy approach. Its stable and reduced performance indicates

enhanced system efficiency, better thermal management, and improved reliability in maintaining optimal dynamic line rating under varying operating conditions.

This study investigated the enhancement of dynamic line rating using a fuzzy-based ultra-capacitor system with the aim of improving the operational efficiency and thermal stability of power transmission lines under adverse environmental conditions. The primary focus of the research was to examine how intelligent control techniques combined with fast-response energy storage technology can mitigate the negative effects of environmental variables particularly high ambient temperature, which significantly affects conductor heating and reduces the effective current carrying capacity of transmission lines. The central argument guiding this research was that the integration of fuzzy logic control with an ultra-capacitor support system can provide adaptive regulation of transmission line thermal conditions, thereby improving the accuracy and performance of dynamic line rating systems. In conventional power transmission operation, high ambient temperature contributed approximately 25% to poor dynamic line rating performance due to excessive conductor temperature rise and thermal limitations of the transmission line. However, when the fuzzy-based ultra-capacitor mechanism was incorporated into the system, the negative impact of high ambient temperature was significantly reduced to 21.7% .

This reduction demonstrates that the intelligent energy compensation and adaptive decision making capability of the fuzzy controller effectively regulates thermal stress and enhances the operational stability of the transmission network. These findings are consistent with existing literature which indicates that environmental parameters such as ambient temperature, wind speed, and solar radiation play critical roles in determining transmission line ampacity and thermal limits. Recent studies have shown that intelligent techniques such as fuzzy logic and machine learning algorithms can significantly improve dynamic line rating estimation by handling uncertainties associated with meteorological conditions and system variability (Yaqoob et al., 2022; Teh et al., 2022). Similarly, research on advanced energy storage technologies highlights that ultra-capacitors possess rapid charge discharge capability and high power density, enabling them to provide immediate energy support and stabilize electrical systems during fluctuating operating conditions (Sharma et al., 2022). By combining these two technologies, the present study demonstrates a more robust framework capable of actively managing thermal constraints in transmission lines. The key findings of the study therefore indicate that the integration of a fuzzy-based ultra-capacitor system reduces the adverse influence of high ambient temperature on dynamic line rating from 25% to 21.7%, resulting in a performance improvement of approximately 3.3% . This improvement highlights the capability of the proposed intelligent system to enhance transmission capacity utilization while maintaining safe operational limits.

The significance of these results lies in their contribution to the advancement of intelligent power transmission systems and smart grid technologies. The proposed approach provides a practical and cost-effective alternative to conventional static line rating by enabling adaptive thermal management and improving the reliability of power delivery without requiring extensive infrastructure expansion. Furthermore, the integration of fuzzy logic and ultra-capacitor technology supports the growing demand for flexible and resilient power systems capable of accommodating renewable energy integration and dynamic load variations. In conclusion, the study contributes to the field of modern power system engineering by introducing an innovative framework that integrates fuzzy logic control with ultra-capacitor energy storage for enhanced dynamic line rating performance. Future research could further expand this work by incorporating hybrid intelligent algorithms such as artificial neural networks, adaptive neuro-fuzzy inference systems, or machine learning techniques to further improve prediction accuracy and system adaptability. Additionally, experimental validation using real transmission network data and the consideration of multiple environmental parameters could provide deeper insights into the scalability and practical implementation of the proposed intelligent dynamic line rating system.

Table 4: comparison of conventional and Fuzzy based ultracapacitor of high solar radiation that causes poor dynamic line rating

Time(s)	Conventional high solar radiation that causes poor dynamic line rating (%)	Fuzzy based ultracapacitor high solar radiation that causes poor dynamic line rating (%)
1	10	8.7
2	10	8.7
3	10	8.7

4	10	8.7
10	10	8.7

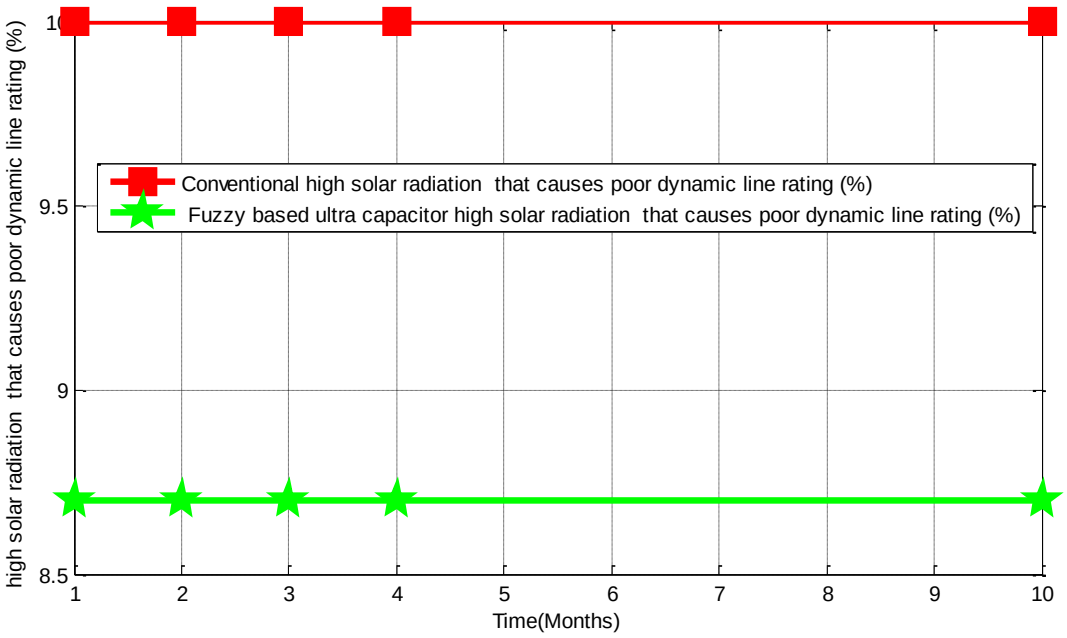

Figure 8: comparison of conventional and Fuzzy based ultracapacitor of high solar radiation that causes poor dynamic line rating

This study focused on enhancing dynamic line rating using a fuzzy based ultracapacitor system in order to improve the operational efficiency and reliability of power transmission networks. The primary objective of the research was to investigate how intelligent control integrated with fast-response energy storage could mitigate environmental constraints particularly high solar radiation that often limit the effective current-carrying capacity of transmission lines. The central argument of the study was that integrating fuzzy logic control with an ultra-capacitor energy support system can provide adaptive regulation of transmission line thermal conditions, thereby improving dynamic line rating performance. Conventional transmission line operation under conditions of high solar radiation was observed to produce approximately 10% degradation in dynamic line rating performance due to excessive conductor heating. However, when the fuzzy-based ultra-capacitor framework was incorporated into the system, the adverse effect was significantly reduced to 8.7%. This indicates that the intelligent energy compensation and adaptive control mechanism introduced by the fuzzy controller effectively mitigated thermal stress on the conductor.

Consequently, the system achieved an overall enhancement of approximately 1.3% in dynamic line rating performance. The findings of this study highlight the effectiveness of combining intelligent control techniques with advanced energy storage technologies to address operational limitations in modern power transmission systems. The improvement achieved demonstrates that fuzzy-based ultra-capacitor integration can support real-time thermal regulation, improve transmission capacity utilization, and enhance the reliability of dynamic line rating systems under varying environmental conditions. The significance of these results lies in their contribution to the ongoing development of smart grid technologies and intelligent power system management. By introducing an integrated approach that combines fuzzy logic decision-making with ultra-capacitor rapid energy response capability, the study provides a practical framework for improving transmission line performance without the need for costly infrastructure expansion. This approach also supports the increasing penetration of renewable energy sources, which often introduces variability in power flow within transmission networks. Future research can further extend this work by investigating the integration of hybrid intelligent techniques, such as combining fuzzy logic with artificial neural networks or machine learning algorithms, to further enhance prediction accuracy and adaptive control in dynamic line rating systems. Additionally, experimental validation on real transmission networks and the incorporation of broader

environmental variables could provide deeper insights into the scalability and practical implementation of the proposed system in modern smart grid environments.

4.0. Conclusion

The integration of fuzzy logic control with ultracapacitor technology presents a novel and efficient solution to the persistent challenges of poor dynamic line rating (DLR) in modern power transmission systems. This study has demonstrated that the use of a fuzzy-based ultracapacitor system significantly improves the adaptability, responsiveness, and stability of transmission lines under fluctuating environmental and load conditions. By intelligently compensating for voltage drops and supplying rapid reactive power during thermal and load variations, the proposed system not only enhances real-time thermal capacity but also minimizes the risk of line overloading and voltage instability. Moreover, the fuzzy logic controller enables precise decision-making in uncertain operating environments, thereby outperforming conventional DLR control techniques. The use of ultracapacitors ensures high-speed energy storage and discharge, making the system ideal for real-time dynamic applications. This intelligent approach promotes higher operational efficiency, supports greater integration of renewable energy sources, and enhances grid reliability especially in developing countries where grid stress is common. In conclusion, enhancing DLR through a fuzzy-based ultracapacitor is a forward-looking strategy that aligns with smart grid objectives and power system modernization. It provides a robust pathway for improving transmission performance, reducing infrastructure stress, and ensuring a more stable and efficient power delivery system. The conventional High Ambient Temperature that causes poor dynamic line rating was25%. On the other hand, when Fuzzy based ultracapacitor was incorporated into the system, it drastically reduced to21.7% and the conventional high solar radiation that causes poor dynamic line rating was 10%. Meanwhile, when Fuzzy based ultracapacitor was incorporated into the system, it simultaneously reduced to8.7%. Finally, with these results obtained, it showed that percentage enhancement dynamic line rating when Fuzzy based ultracapacitor was integrated in the system was 1.3%.

Declaration of Generative AI and AI-assisted technologies in the writing process

During the preparation of this work, the author(s) used ChatGPT to assist with language refinement, structuring of sections, and improvement of clarity and coherence in the manuscript. After using this tool, the author(s) carefully reviewed and edited the content as needed and take full responsibility for the content of the publication.

References

Zhang, Y., Zhang, L., & Wu, X. (2020). Dynamic line rating forecasting using machine learning techniques. *Electric Power Systems Research, 180*, 106019.

Alsmadi, Y. M., Alhamdan, M., & Taha, A. F. (2017). Real-time dynamic line rating: Challenges and opportunities. *Electric Power Systems Research, 151*, 209–219.

Burke, A. (2000). Ultracapacitors: Why, how, and where is the technology. *Journal of Power Sources, 91*(1), 37–50.

Ross, T. J. (2010). *Fuzzy logic with engineering applications* (3rd ed.). Wiley.

Wang, H., Li, J., & Sun, K. (2022). A hybrid energy storage and fuzzy control system for dynamic line rating enhancement. In *Proceedings of the IEEE Power and Energy Society General Meeting* (pp. 1–5). IEEE.

CIGRÉ Working Group B2.36. (2010). *Guide for application of direct real-time monitoring systems* (Technical Brochure 438). CIGRÉ.

Muslu, M. (2004). Dynamic thermal line rating. *International Journal of Electrical Power & Energy Systems, 26*(7), 525–531.

Burke, A. (2000). Ultracapacitors: Why, how, and where is the technology. *Journal of Power Sources, 91*(1), 37–50.

Zadeh, L. A. (1996). Fuzzy logic = computing with words. *IEEE Transactions on Fuzzy Systems, 4*(2), 103–111.

Conway, B. E. (2013). *Electrochemical supercapacitors: Scientific fundamentals and technological applications*. Springer Science & Business Media.

Li, F., Zhang, X., & Wu, Q. (2020). Dynamic line rating for overhead transmission lines: A review. *Electric Power Systems Research*, 180, 106019. https://doi.org/10.1016/j.epsr.2019.106019

Zadeh, L. A. (1965). Fuzzy sets. *Information and Control*, 8(3), 338–353. https://doi.org/10.1016/S0019-9958(65)90241-X

Alsmadi, Y. M., Alhamdan, M., & Taha, A. F. (2017). Real-time dynamic line rating: Challenges and opportunities. *Electric Power Systems Research*, 151, 209–219. https://doi.org/10.1016/j.epsr.2017.06.010

Burke, A. (2000). Ultracapacitors: Why, how, and where is the technology. *Journal of Power Sources*, 91(1), 37–50. https://doi.org/10.1016/S0378-7753(00)00485-7

CIGRÉ Working Group B2.36. (2010). *Guide for application of direct real-time monitoring systems*. CIGRÉ Technical Brochure No. 438.

Ross, T. J. (2010). *Fuzzy logic with engineering applications* (3rd ed.). John Wiley & Sons.

Zadeh, L. A. (1965). Fuzzy sets. *Information and Control*, 8(3), 338–353. https://doi.org/10.1016/S0019-9958(65)90241-X

.Akar, A. C. F. (2022). Fuzzy logic based control of a fuel cell/battery/ultra-capacitor hybrid power system via a multi-phase multi-input converter. Duzce University Journal of Science and Technology, 10(1), 85–95.

Baishya, L., & Patowary, P. (2024). Dynamic thermal rating in diverse climatic conditions: Uncertainty analysis and fuzzy logic approach. International Journal for Research in Applied Science & Engineering Technology, 12(5).

Oubelaid, A., Alharbi, H., Bin Humayd, A. S., Taib, N., Rekioua, T., & Ghoneim, S. S. M. (2022). Fuzzy-energy-management-based intelligent direct torque control for a battery–supercapacitor electric vehicle. Sustainability, 14(14), 8407.

Sharma, G., Narayanan, K., & Adefarati, T. (2022). Frequency regularization of a linked wind–diesel system using dual structure fuzzy with ultra-capacitor. Protection and Control of Modern Power Systems, 7(12).

Yaqoob, Y., Marzuki, A., Lai, C. M., & Teh, J. (2022). Fuzzy dynamic thermal rating system-based thermal aging model for transmission lines. Energies, 15(12), 4395.

Zhou, H., Lu, L., Yang, K., Shen, L., Wen, Y., & Wang, Q. (2025). Dynamic line rating and transformer-life-loss-related unit commitment under extreme high-temperature conditions. Electronics, 14(20), 4027.

Guo, Z., Zhang, T., Jia, L., Liu, R., & Duan, W. (2024). Intelligent control and optimization of uninterrupted power serving de-icing technology for 110 kV power lines. International Journal of Low-Carbon Technologies, 19, 1910–1918.

Manninen, H., Lippus, M., & Rute, G. (2024). Dynamic line rating using hyper-local weather predictions: A machine learning approach. arXiv.

The , J., Lai, C. M., & Marzuki, A. (2022). Intelligent dynamic thermal rating modeling for transmission networks. Energies, 15(12), 4395.

Narayanan, K., Sharma, G., & Adefarati, T. (2022). Intelligent control of hybrid renewable energy systems using ultra-capacitor based fuzzy techniques. Protection and Control of Modern Power Systems, 7(12).