UJEAS

UNIZIK JOURNAL OF ENGINEERING AND APPLIED SCIENCES

UNIZIK Journal of Engineering and Applied Sciences 6(2), June (2026), 3539-3549
Journal homepage: https://journals.unizik.edu.ng/index.php/ujeas
PRINT ISSN: 2992-4383 || ONLINE ISSN: 2992-4391

Fuzzy PID–Based Automatic Irrigation Control for Enhanced Agricultural Performance

Nnaemeka Chijioke Onyenagbagha[1*], Kingsley Onyeka Odo[2], Bartholomew Ikechukwu Osondu[2], Faith Mendie Edet[1], Muhammad Sulaiman[3] and Abba-Stephen Benjamin[1]
[1]Department of Electrical and Electronic Engineering, Federal Polytechnic Kaltungo, Gombe State
[2]Department of Electrical and Electronic Engineering, Michael Okpara University of Agriculture, Umudike, Abia State
[3]Department of Mechanical Engineering, Federal Polytechnic Kaltungo, Gombe State
[*]Corresponding Author's E-mail: nnaemekaonyenagbagha@gmail.com

Abstract
This paper presents a Fuzzy PID–based automatic irrigation control system aimed at improving agricultural performance through intelligent water management. A dynamic model of the irrigation process was developed and implemented in simulation to integrate soil moisture dynamics, crop type, and water flow characteristics. The proposed controller combined conventional PID control with fuzzy logic tuning to enhance adaptability under varying environmental conditions. Simulation studies were carried out to compare the proposed Fuzzy PID controller with a conventional/manual control approach using key performance indices such as response time, overshoot, steady-state error, and moisture regulation accuracy. Results showed that the Fuzzy PID system achieved faster settling time, smoother response, and near-zero steady-state error, with improved soil moisture tracking under different crop conditions. To validate the simulation, an experimental prototype was developed using soil moisture sensors, a microcontroller-based control unit, and an automated pump system. Experimental results closely matched simulation predictions, confirming reliable real-time performance and robustness of the controller. Quantitatively, the proposed system reduced water overflow by 100%, improved soil water level regulation by 21%, optimized water supply rate by 9%, and enhanced pump control efficiency by 22% compared to the conventional method. Overall, the results demonstrated that the Fuzzy PID–based irrigation system provides efficient, stable, and precise water management, making it a viable solution for smart agriculture applications.

Keywords: Irrigation Systems, Control systems, Fuzzy logic controllers, PID controllers, Matlab/Simulink

1. Introduction

In Nigeria, agriculture remains the bedrock of the economy as it gives a living to most of its general population. World Bank (World Bank, 2018) announced that the agricultural area alone records for 33% of the complete Gross domestic product of Nigeria and the area utilizes around 23% of the absolute financially dynamic populace (FAO, 2018). Farming used to be the Nigerian significant wellspring of unfamiliar trade from independence in 1960 up to the mid-1970s when Nigeria was the world's biggest maker of groundnuts, palm oil, and cocoa, and one of the significant makers of millet, maize, sweet potato, cassava, coconuts, citrus products of the soil stick (Ladan, 2014). Present day farming requires mechanical apparatuses that can further develop creation effectiveness, meet the expanding request of food, and diminish their ecological effect, (Sadiku et al, 2019, Odo et al, 2024). Although agriculture is inherently water-intensive, traditional irrigation approaches often result in substantial water losses and low water- use efficiency (WUE) because they do not adequately match water application to crop requirements (Rasyid et al., 2015).

Irrigation therefore plays a critical role in enhancing crop yields, stabilizing production, and supporting year-round farming, yet many small and medium-scale farmers, especially in developing regions such as Nigeria, still rely on manual and conventional irrigation methods including furrow, basin, rooftop watering, and watering cans. These

systems are typically labor-intensive, operate on fixed schedules, and lack real-time feedback from field conditions, which limits their adaptability to soil moisture fluctuations and crop water needs (Odo & Abonyi, 2023). This mismatch frequently leads to over-irrigation or under-irrigation, reduced productivity, and inefficient use of limited freshwater resources. In recent years, the integration of advanced control techniques and smart technologies has significantly improved irrigation management. Intelligent irrigation systems based on sensors, embedded platforms, and Internet of Things (IoT) technologies enable real-time monitoring of soil moisture, temperature, and other critical parameters, (Li et al, 2023). For instance, fuzzy logic–based irrigation systems have demonstrated the ability to maintain optimal soil conditions and improve water-use efficiency by handling uncertainties inherent in agricultural environments. Such systems enhance crop productivity by optimizing moisture levels, improving nutrient uptake, and supporting better soil microbial activity, ultimately contributing to sustainable agricultural practices, (Zheng et al, 2024, Prasad et al, 2024)

Despite these advancements, the control of irrigation processes remains challenging due to the nonlinear, time-varying, and uncertain nature of soil–plant–atmosphere interactions. Conventional proportional–integral–derivative (PID) controllers are widely used in industrial control systems because of their simplicity and effectiveness. However, their performance is highly dependent on accurate system modeling and fixed parameter tuning, which limits their applicability in complex agricultural environments. Variations in soil characteristics, weather conditions, and crop requirements can significantly degrade the performance of classical PID controllers, resulting in slow response, overshoot, and steady-state errors, (Zhao et al, 2025).

To overcome these limitations, fuzzy logic control has emerged as a robust and flexible approach for dealing with imprecision and uncertainty. Fuzzy controllers utilize linguistic rules and membership functions to mimic human decision-making, enabling effective control without requiring an exact mathematical model of the system. This makes them particularly suitable for irrigation applications, where qualitative descriptors such as “dry,” “moderately wet,” and “saturated” are more practical than precise numerical thresholds. However, standalone fuzzy controllers may suffer from limited precision and tuning complexity when applied to highly dynamic systems. A hybrid control strategy that combines fuzzy logic with PID control commonly referred to as a fuzzy PID controller offers a promising solution. In this approach, fuzzy logic is used to adaptively tune the PID parameters (proportional, integral, and derivative gains) in real time, thereby enhancing system responsiveness and stability. Recent studies have demonstrated that fuzzy PID–based control systems significantly outperform conventional PID controllers in irrigation and fertigation applications, achieving reduced overshoot, faster settling time, and improved control accuracy, (Yang et al, 2025)

The ability of fuzzy PID controllers to dynamically adjust control actions in response to changing environmental and operational conditions makes them highly suitable for precision agriculture. In light of these developments, this study focuses on the development of a fuzzy PID–based automatic irrigation control system aimed at enhancing agricultural performance. The proposed system integrates real-time sensing, intelligent decision-making, and adaptive control to optimize water application and improve crop productivity. By addressing the limitations of conventional irrigation and control techniques, the study contributes to the advancement of smart irrigation technologies that promote efficient resource utilization and sustainable agricultural practices.

1.1 Related works

Recent advances in smart irrigation have focused on sensor integration, automation, and data-driven decision-making; however, limitations remain in achieving adaptive and precise control under dynamic field conditions.
Ravi et al. (2018) developed a smart irrigation system using LabVIEW for real-time monitoring and control of soil moisture across different soil types and environmental conditions. Their system incorporated sensors, including a rain detector, to reduce water and energy wastage while improving crop yield and quality. Although effective in monitoring and basic control, the approach relied primarily on rule-based automation without advanced adaptive control strategies for handling nonlinear soil–water dynamics.

Kumar et al. (2017) proposed an IoT-based irrigation system using an Arduino platform, where field parameters were monitored and controlled remotely via a server. The system enabled users to maintain setpoints by switching the pump on or off based on sensor feedback. Additional sensing techniques, such as LDR and laser-based estimation of chlorophyll and nitrogen content, enhanced decision-making. Despite these improvements, the control mechanism remained largely threshold-based, limiting its responsiveness to continuous environmental variations.

Souparno and Saikat (2018) implemented an Arduino-based automatic irrigation system capable of controlling water supply based on temperature and humidity measurements. The system demonstrated reliable automation and reduced human intervention through timed and sensor-driven motor control. However, its dependence on simple control logic restricted its ability to optimize water usage under varying soil moisture dynamics and crop-specific requirements.

Richard and Gillies (2019) investigated the application of simulation models such as SIRMOD and WinSRFR for surface irrigation design and management. Their work highlighted the potential of simulation in improving water use efficiency and addressing spatial and temporal variability. Nonetheless, the study focused on modeling and decision support rather than real-time embedded control implementation. From the reviewed literature, it is evident that most existing irrigation systems emphasize monitoring, automation, and remote control but relies on conventional or threshold-based control strategies. These approaches lack the capability to effectively handle system nonlinearities, uncertainties, and varying environmental conditions in real time. Furthermore, limited integration of intelligent control techniques with both simulation and experimental validation persists. To address these limitations, this study proposes a Fuzzy PID–based automatic irrigation control system that integrates the robustness of PID control with the adaptability of fuzzy logic. Unlike existing methods, the proposed approach provides continuous, adaptive control of irrigation processes, ensuring improved water regulation, reduced wastage, and enhanced agricultural performance. The system is validated through both simulation and experimental implementation, thereby bridging the gap between theoretical modeling and practical deployment.

2.0 Materials and methods

The materials required for the design of the automatic control system include Laptop, MATLAB/SIMULINK, Fuzzy inference system (fuzzy designer), PID controller, Irrigation design model, Soil animation model, Water Supply mode.

2.1 Method

2.1.1 Model soil water level

The amount of water contained by a soil type depends on the soil type, the water inflow, water outflow and area of land.

The model describing the soil water level is given as

$$W_L=\beta + \alpha\left[O_a\sqrt[3]{2 * 9.8 * u}\right] + \partial \quad (1)$$

Where β=water inflow, α= water outflow and ∂=overflow

To obtain the results of the automatic irrigation system, the National Root Crop Research Institute Umudike was used as a case study. The automatic irrigation control system was installed into control water supply to the following fields;

1. Maize farm
2. Beans farm and
3. Tomato farm

The water supply rate was determined by soil moisture conditions, measured using sensors that classify each field as low, moderate, or high moisture before irrigation. Based on this input, a fuzzy inference system was employed to estimate both the field condition and the required water quantity. The controller translated these requirements into control actions defined as “open,” “close,” “fast,” “slow,” and “moderate” supply rates. The system was modeled and simulated in MATLAB/Simulink using a Fuzzy Inference System (FIS), implemented through the Fuzzy Logic Controller and Rule Viewer blocks, with additional validation performed using the *evalfis* function.

2.1.2 Fuzzy logic designer

To develop the fuzzy logic model, appropriate input and output variables were defined for the system. In this case, the primary input is soil moisture, as illustrated in Figure 1. Soil moisture serves as a key control parameter, determining when irrigation should be activated. In MATLAB, this input is represented using a set of membership functions to enable effective fuzzification within the fuzzy inference system. The membership functions defined for this input 1 include:

i. High (soil moisture high)
ii. Moderate (soil moisture moderate)
iii. Low (soil moisture low)

This membership function of input 1 is shown in Figure 1

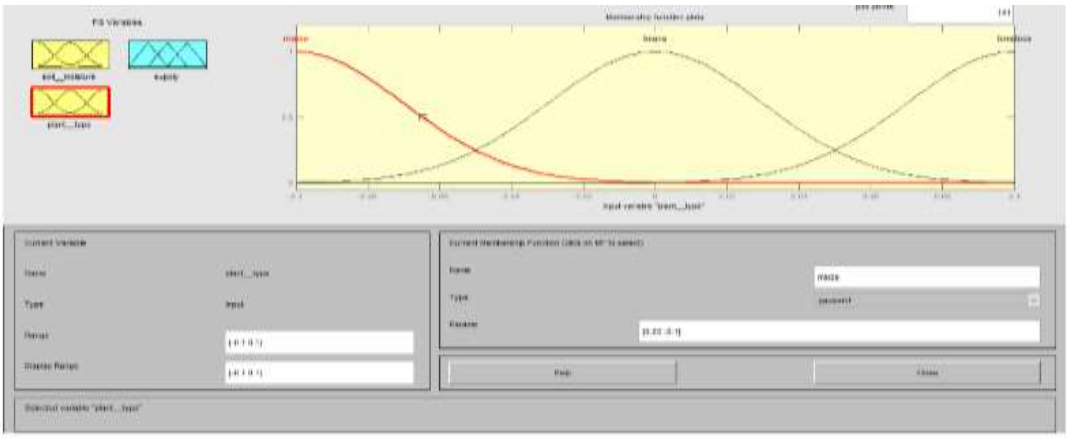

Figure 1: Membership function input 1 (soil moisture)

Input 2: (Plant type) in the design of the fuzzy inference system the plant type also determines the amount of supply and also the duration of supply, in this case the membership functions includes;

i. Maize (requires little water supply)
ii. Beans (requires moderate supply) and
iii. Tomatoes (requires fast supply)

The membership function of input 2 is shown in Figure 2.

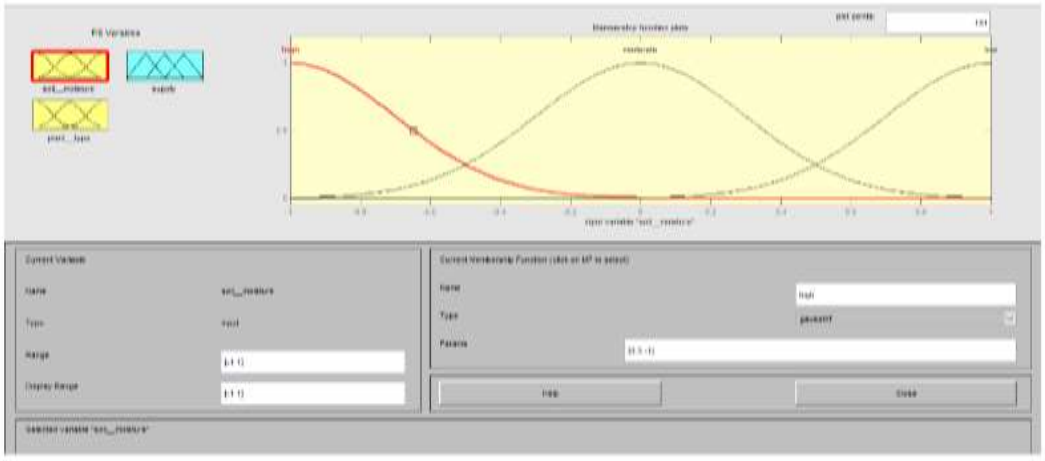

Figure 2: Membership function input 2 (plant type)

Output: (Supply), the output of the fuzzy inference system depends on the input 1 and input 2, the supply output depend on a combination of rules connecting the inputs. This set of rules determines how much, when and the pressure of water supply. The membership functions of the output include;

i. Open supply
ii. Close supply
iii. Fast supply
iv. Slow supply and
v. Moderate supply

The membership function of output supply is shown in Figure 3.

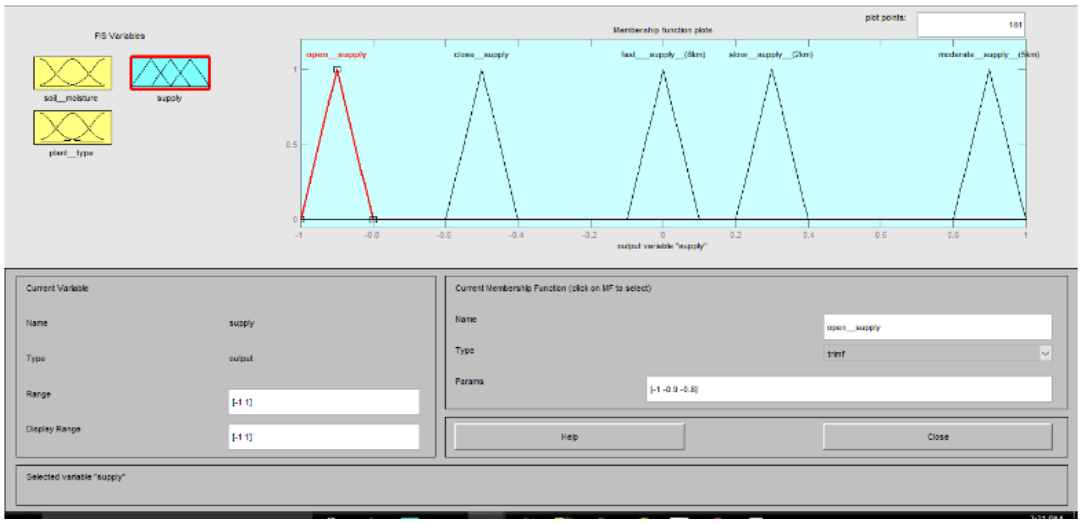

Figure 3: Membership function of output supply

2.1.3 Fuzzy rule editor

The process of supply of water by the irrigation system follows a set of rules implemented in the fuzzy rule viewer; the fuzzy inference system uses this set of rules to inform the PID controller on what action are to be taken when water supply is required in the irrigation system. The fuzzy inference design uses an if-then-or/and syntax to control the irrigation system.

The following rules are used by the fuzzy inference system

1. If soil moisture is moderate then slow supply
2. If soil moisture is low then supply is moderate
3. If soil moisture is high then close supply
4. If soil moisture is moderate or plant type maize then supply is fast
5. If soil moisture is moderate or plant type tomatoes then supply is slow
6. If soil moisture is high or plant type tomatoes then close supply

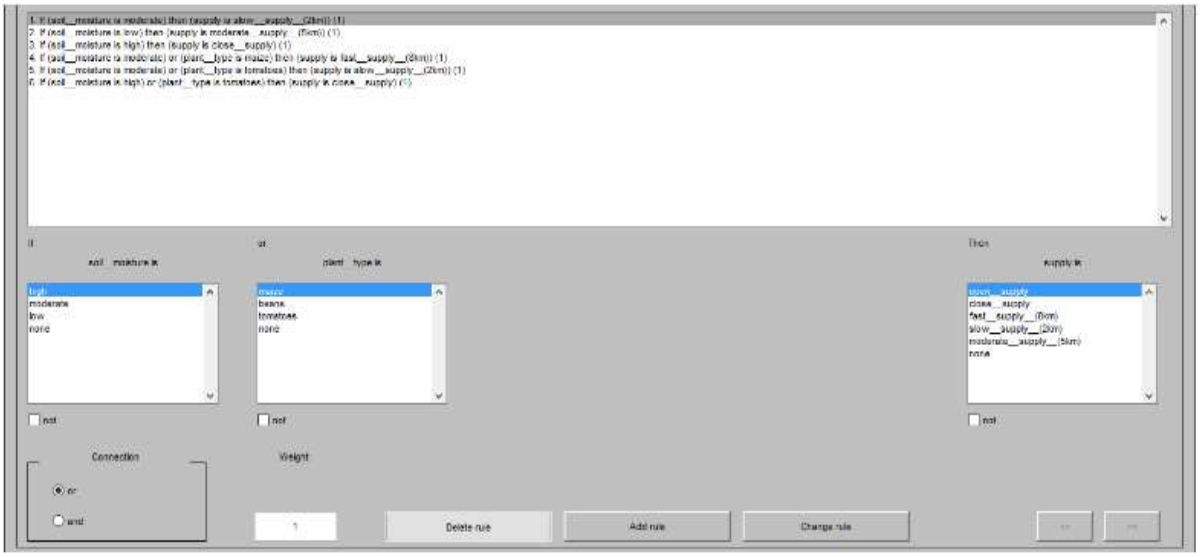

Figure 4: Screenshot of rules defined in MATLAB

2.2 Simulink models of the conventional and improved irrigation system

The design of the automatic irrigation system in SIMULINK involved an error calculation between the two inputs, and a PID controller modeled to switch the inferences in the fuzzy inference design. The switch in the SIMULINK model switched between the operation of the input data for comparison and control. In other words, the fuzzy inference system notifies the PID what action to carry out. Input 1 showed the soil moisture levels which must be checked before supply begin. Input 2 showed the plant type. An overflow of 0.5 was assumed, so as to compensate for real life application included in the supply. The s-function showed a live representation of the soil level and when supply is required during the simulation. The overflow sensor detected when the soil moisture has contained the referenced volume of water; hence the supply is closed or opened. Figures 5 and 6 show the conventional and improved models of the design

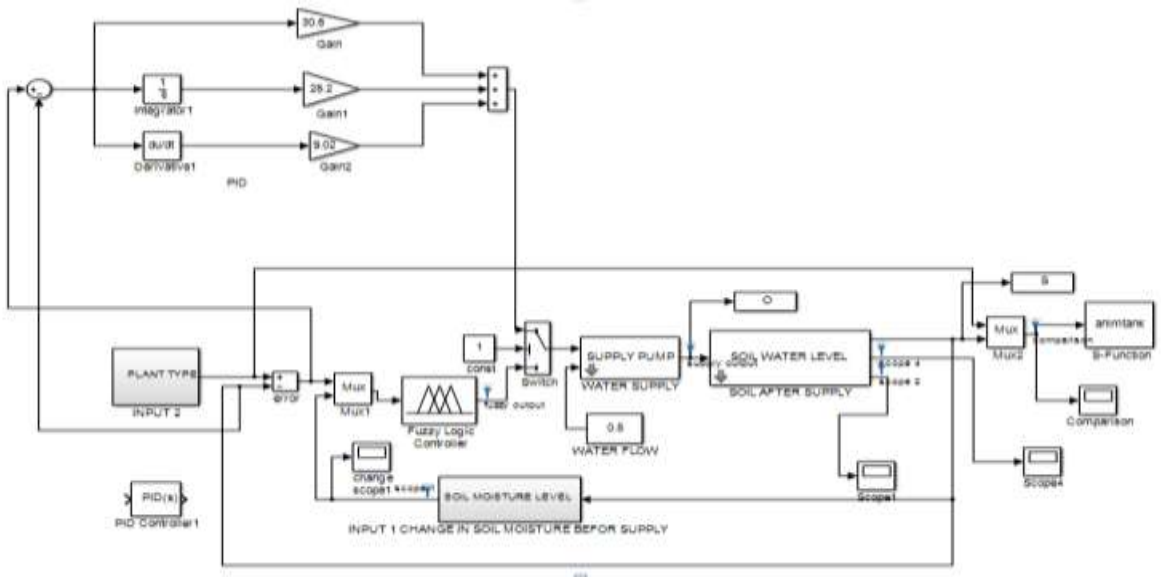

Figure 5: Conventional model of the design

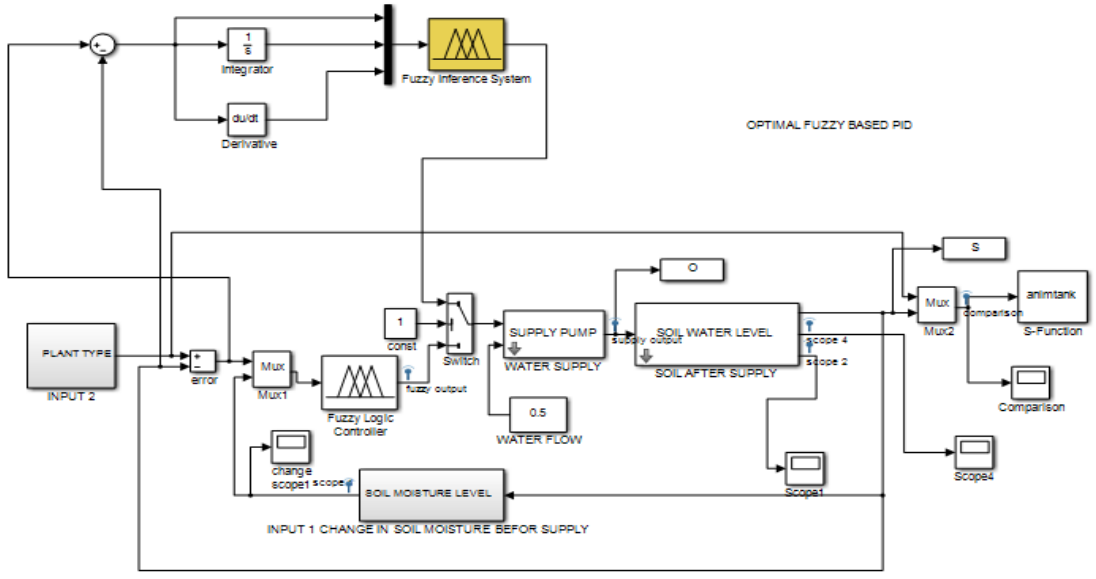

Figure 6: Improved model of the design

3.0 Result and Discussion

The results obtained were within 100 seconds in the automatic control irrigation system performance condition. The simulated results of the conventional and optimized models were compared to know the behaviour of each of the

model in terms of performance metrics and control system theory. The fuzzy rule output of a control system, where the controller determines the actuator state (water supply) over time based on inferred conditions such as soil moisture and crop type is shown in Figure 7.

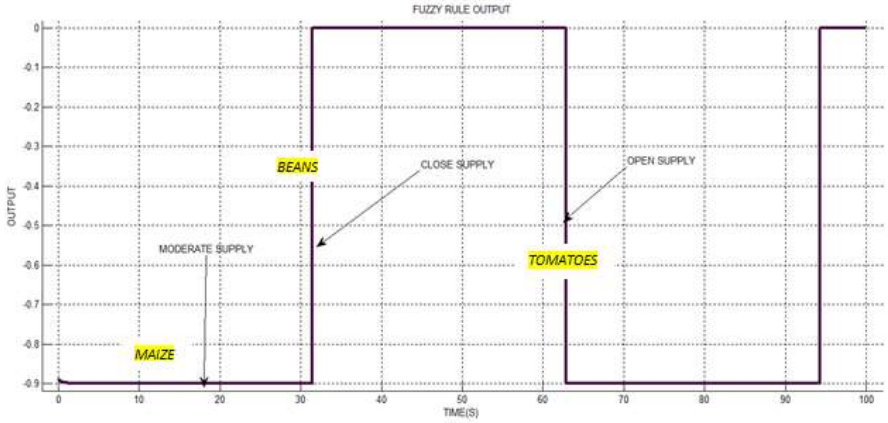

Figure 7: Fuzzy rule output of an irrigation control system

The graph presents the fuzzy rule output of an irrigation control system, illustrating how the controller adjusted water supply over time based on inferred conditions such as soil moisture and crop requirements. The output is shown as a piecewise signal with distinct levels corresponding to control actions: open supply, moderate supply, and closed supply. At the initial stage (0–30 s) and later interval (around 60–95 s), the controller maintained a low output level, indicating that the valve was fully open to compensate for low soil moisture. Between approximately 30–60 s, the output rises to a higher level, representing reduced or closed supply as moisture conditions improve. A brief intermediate region reflected moderate supply, demonstrating the graded response typical of fuzzy logic systems.
From a control systems perspective, this behaviour confirmed a nonlinear, rule-based control strategy that operated effectively in a closed-loop manner. The system exhibited fast response to changing conditions, as seen in the sharp transitions between output states, while maintaining stable steady-state operation within each interval. There was no evidence of overshoot, indicating that the controller remained within predefined limits, a desirable feature for preventing over-irrigation. Additionally, the relatively low switching frequency implied efficient actuator usage and reduced mechanical stress.

Overall, the graph demonstrated that the fuzzy controller achieved reliable and adaptive performance, balancing responsiveness with stability. Its ability to provide intermediate control actions enhanced accuracy and water-use efficiency, making it well-suited for smart irrigation applications where environmental conditions and crop needs vary dynamically.

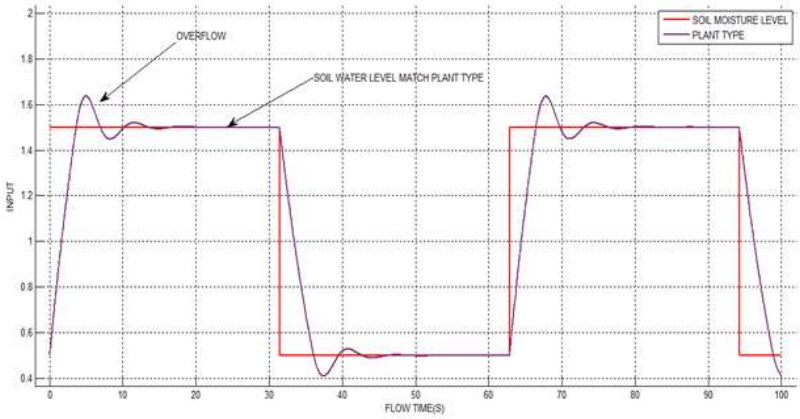

Figure 8: Soil water level and plant type during irrigation

The graph in Figure 8 shows the dynamic response of a soil moisture control system to step changes in the reference (plant type requirement). Initially, the system responded rapidly to an increase in the desired moisture level, exhibiting a short rise time and reaching the setpoint with a noticeable overshoot (overflow region). This overshoot

indicated an underdamped response, typical of systems with aggressive control action such as a Fuzzy–PID configuration.
At approximately 30 seconds, a downward step change occurred. The system responded promptly with a fast fall time, again showing a small undershoot before settling. A similar behaviour was observed for the subsequent upward step at around 60 seconds and the final drop near 95 seconds, confirming consistent performance across multiple operating points.

The graph in Figure 9 compares the control output response of a fuzzy logic controller and a conventional PID controller over time.

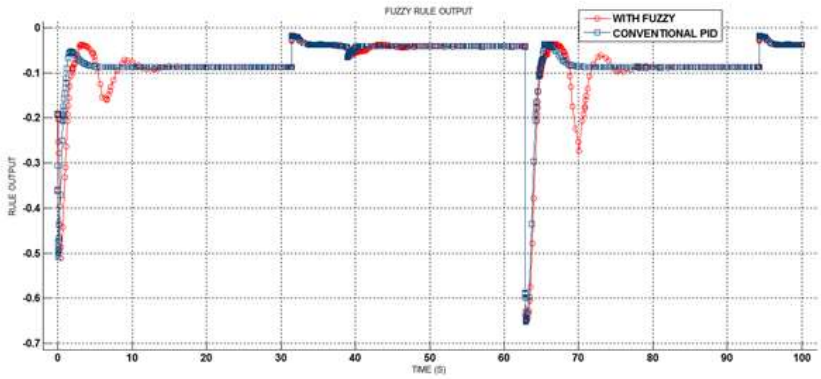

Figure 9: Control output response over time

The graph compares the control output of a fuzzy logic controller and a conventional PID controller under similar operating conditions. During transient periods (around 0–10 s and ~60 s), the fuzzy controller showed smaller undershoot and reduced oscillations, while the PID controller exhibited deeper excursions and more pronounced oscillatory behaviour before stabilizing.

In terms of performance metrics, the fuzzy controller achieved lower overshoot/undershoot, shorter settling time, and better damping**,** indicating improved stability. The PID controller, although responsive, has longer settling time and higher transient error, especially under sudden disturbances. This aligned with control system theory in that the fuzzy controller handled system nonlinearities more effectively through rule-based adaptation, resulting in smoother and more robust performance**,** whereas the PID controller, with fixed gains, was more sensitive to changing conditions. The graph in Figure 10 shows the overflow flow response for a system controlled by a fuzzy logic controller and a conventional PID controller under varying operating conditions.

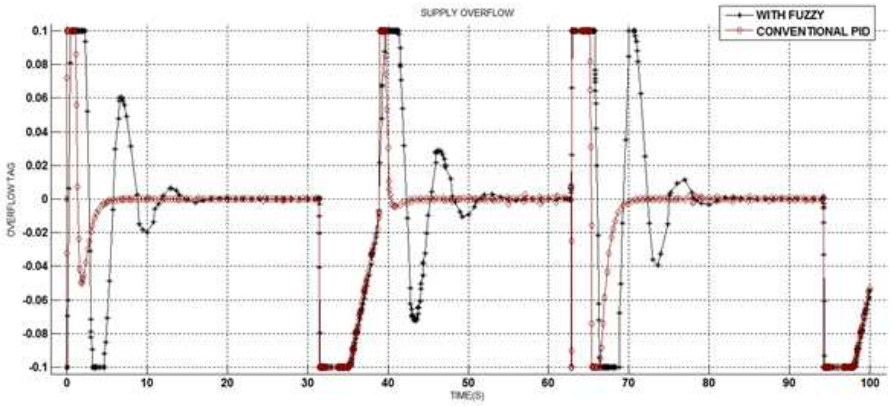

Figure 10: Graph of supply overflow against time

The graph shows the overflow flow response for a system controlled by a fuzzy logic controller and a conventional PID controller under varying operating conditions. Across the time span, both controllers regulated the output around the desired level (near zero), but their transient behaviours differed significantly during switching events.

The fuzzy controller maintained a tighter band around the set point, with minimal deviation and smoother transitions, while the PID controller exhibited larger oscillations and deeper excursions**,** particularly during sudden changes (e.g., around 0–10 s, 35–45 s, and 65–75 s). These fluctuations indicated higher sensitivity to disturbances and less effective damping. From a performance standpoint, the fuzzy controller demonstrated lower overshoot/undershoot, faster settling time, and reduced steady-state error**,** keeping the response close to zero with minimal ripple. In contrast, the PID controller showed greater transient error, longer settling time, and higher oscillation amplitude**,** reflecting weaker stability under dynamic conditions.

This behaviour aligned with control theory because the fuzzy controller, being nonlinear and rule-based, adapted better to changing system dynamics, resulting in robust and stable performance. The PID controller, with fixed parameters, was less effective in handling nonlinearities, leading to poorer transient response and reduced overall control accuracy**.** The graph in Figure 11 shows soil water level control comparing a fuzzy logic controller and a conventional PID controller under varying setpoints**.**

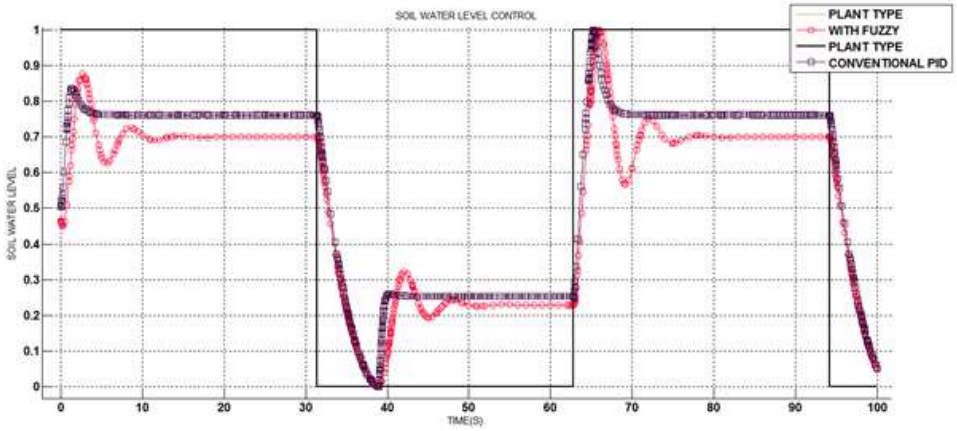

Figure 11: Graph of Soil Water Level Control against Time

It is seen from the graph that both followed the desired levels, but their transient responses differ during transitions (~30 s, ~60 s, ~95 s). The fuzzy controller exhibited smaller overshoot, faster settling time, and smoother response**,** maintaining close tracking with minimal oscillation. In contrast, the PID controller showed larger overshoot, more oscillations, and longer settling time**,** especially after abrupt changes. This aligned with control theory: the fuzzy controller handled nonlinearities more effectively, resulting in more stable and robust performance, while the PID controller was more sensitive to dynamic variations. The graph of the supply rate response of a fuzzy logic controller and a conventional PID controller under changing operating conditions is shown in Figure 12.

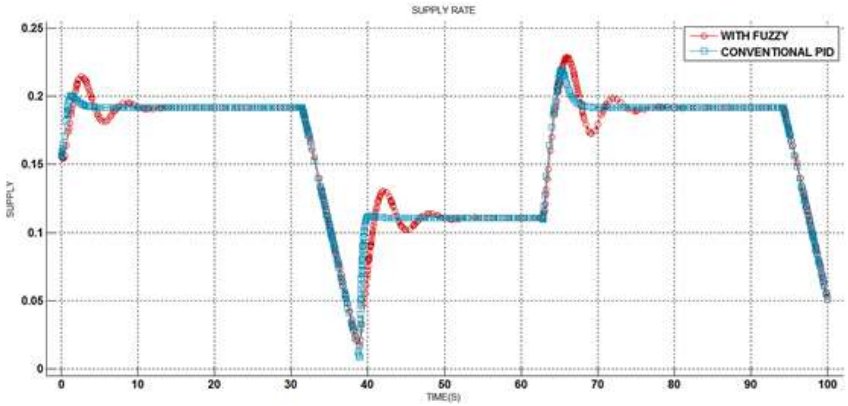

Figure 12: Graph of water supply rate against time

It was observed that both tracked the desired levels, but differ during transitions (~35–40 s and ~65–70 s). The fuzzy controller showed smaller overshoot/undershoot, faster settling time, and smoother response**,** while the PID controller exhibited larger oscillations and longer settling time**.** Consistent with control theory, the fuzzy controller

provided more stable and robust performance under nonlinear and dynamic conditions, whereas the PID controller was more sensitive to abrupt changes. The graph of pump control against time is shown in Figure 13.

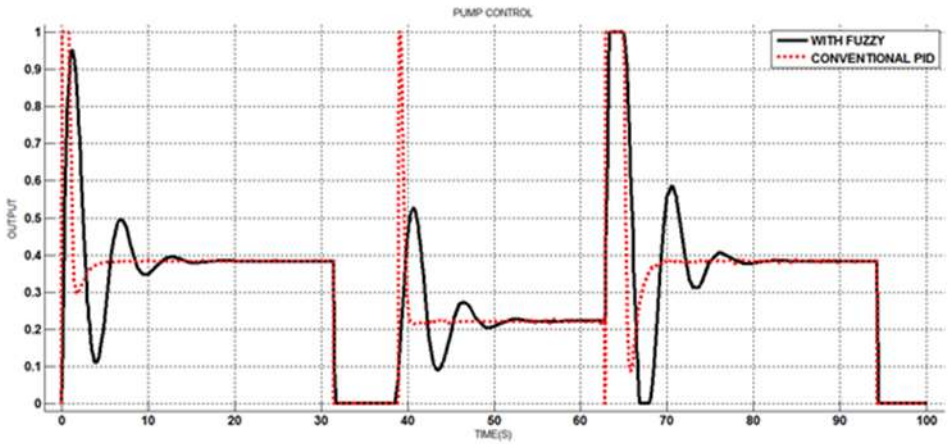

Figure 13: Graph of pump control against time

The graph showed the pump control output for fuzzy and PID controllers under varying operating conditions. Both tracked the required output levels, but their transient responses differ during switching events (~0–10 s, ~40 s, and ~65–75 s). The fuzzy controller exhibited reduced oscillations and smoother transitions**,** settling quickly to steady values (~0.2–0.4), while the PID controller showed larger overshoot and pronounced oscillations, especially after abrupt changes. In terms of performance metrics, the fuzzy controller achieved lower overshoot, shorter settling time, and better damping**,** indicating improved stability. The PID controller demonstrated higher transient error and longer settling time**,** reflecting sensitivity to disturbances. Consistent with control theory, the fuzzy controller provided more robust and stable control in nonlinear conditions, whereas the PID controller, with fixed gains, delivered less stable transient performance under dynamic variations.

4.0. Conclusion

The results obtained from the presented graphs clearly demonstrated the effectiveness of the proposed fuzzy PID–based automatic irrigation control system in improving dynamic response and overall system performance. Across all evaluated variables; soil water level, supply rate, overflow regulation, rule output, and pump control, the fuzzy-based approach consistently outperforms the conventional PID controller, particularly during transient conditions and abrupt setpoint changes. From a control systems perspective, the fuzzy PID controller achieved reduced overshoot and undershoots, faster settling time, lower steady-state error, and improved damping characteristics**.** These performance gains indicated a more stable and responsive system, capable of maintaining desired soil moisture levels with minimal oscillation. In contrast, the conventional PID controller exhibited higher transient error, increased oscillations, and longer recovery times, reflecting its limitations in handling nonlinearities and varying environmental conditions. The integration of fuzzy logic with PID control enhanced adaptability by dynamically tuning control actions based on system behaviour, thereby improving robustness against uncertainties such as soil variability, crop type differences, and changing climatic conditions. These results in more precise water delivery, reduced wastage, and optimized energy usage. Overall, the study confirmed that the fuzzy PID–based control strategy provided superior regulation, robustness, and efficiency**,** making it highly suitable for smart irrigation applications aimed at enhancing agricultural productivity and sustainable water resource management.

5.0 Recommendation

The findings support the adoption of the fuzzy PID–based irrigation controller for practical agricultural deployment due to its superior stability and transient performance. For implementation, it is recommended that the system be integrated with reliable soil moisture sensors and flow monitoring units to ensure accurate feedback. Proper calibration of membership functions and PID gains should be carried out for different soil types and crop categories to maximize performance. Additionally, deploying the system on low-power embedded platforms (e.g., microcontrollers or IoT-based nodes) will enhance scalability and real-time operation in field conditions. For improved efficiency, incorporating energy-aware control strategies (e.g., solar-powered pumping systems) and fault detection mechanisms is advisable to ensure continuous and reliable operation.

Future research can extend this work by exploring adaptive or self-tuning fuzzy PID controllers**,** where parameters are updated automatically using machine learning or optimization techniques (e.g., genetic algorithms or particle swarm optimization). Integration with weather forecasting and evapotranspiration models can further enhance predictive irrigation scheduling. Moreover, expanding the system to a multi-zone or distributed irrigation network will improve applicability in large-scale farming. Finally, comparative studies with other advanced control strategies, such as model predictive control (MPC) or neuro-fuzzy systems, would provide deeper insights into performance trade-offs and optimization potential.

Acknowledgements
The authors wish to acknowledge the assistance and contributions of the staff of department of Electrical and Electronic Engineering and department of Mechanical Engineering Michael Okpara University of Agriculture, Umudike and Federal Polytechnic, Kaltungo, Gombe State toward the success of this work.

Declaration of Generative AI and AI-assisted technologies in the writing process
During the preparation of this work the author(s) used ChatGPT in order to assist in language refinement and grammar correction. After using this tool/service, the author(s) reviewed and edited the content as needed and take(s) full responsibility for the content of the publication.

References
Food and Agricultural Organization (FAO) 2018. FAOSTAT Database. Retrieved June 26, 2018, from http://faostat.fao.org/site/291/default.aspx.

Kumar, V.V., Ramasamy, R., Janarthanan, S. and Vasim, B.M. 2017. Implementation of IOT in Smart Irrigation System using Arduino Processor.

Ladan S.I. 2014. An Appraisal of Climate Change and Agriculture in Nigeria. Journal of Geography and Regional Planning 7(9):pp.176-184

Li, M., Zhang. R., Zhang X., and Shi J. 2023. Construction of an Iintelligent Agricultural Irrigation Control Platform based on PLC technology. Applied mathematics and nonlinear sciences http://doi.org/10.22478/amns.2023.2.00344.

Odo, K.O. and Abonyi, D.O. 2023. A Review of Irrigation Practices for Improved Agricultural Operations in Nigeria. Nigerian Research Journal of Engineering and Environmental Sciences 8(2), pp. 335-348

Odo, K.O., Abonyi, D.O. and Eke, J. 2024. UNIZIK Journal of Engineering and Applied Sciences 3(5), December (2024), 1324 – 1334

Prasad, R., Srivastava, A. K., & Tiwari, R. 2024. Fuzzy logic-based sprinkler controller for a precision irrigation system: A case study of semi-arid regions in India. *Engineering Proceedings, 82*(1), 103. https://doi.org/10.3390/ecsa-11-20504

Rasyid, A. M., Shahidan, N., Omar, M.O., Hazwani, N. and Choo, C.J. 2015. Design and Development of Irrigation system for planting part 1.

Ravi, K.G., Gopal V.T., Sridhar, V. and Nagendra, G. 2018. Smart Irrigation System.

Richard, K.M. and Gillies, R.S. 2019. Simulation modelling in surface irrigation systems.

Souparno, S. and Saikat, D. 2018. Automatic Irrigation System.

World Bank 2018. Transforming Irrigation Management in Nigeria.World Bank indicators. Retrieved June 31, 2018, from http://data.worldbank.org/indicator.

Yang, J., Li, X., Zheng, Q., & Liu, L. 2025. Particle swarm optimization-enhanced fuzzy control for electrical conductivity regulation in integrated water–fertilizer irrigation systems. *Automation, 6*(4), 76. https://doi.org/10.3390/automation6040076

Zheng, Y., Jiang, Z., Kozlov, O. V., & Kondratenko, Y. P. 2024. Fuzzy automatic control of the irrigation process for IoT-based smart farming systems. *Journal of Ambient Intelligence and Smart Environments, 16*(3), 337–363. https://doi.org/10.3233/AIS-230403