UJEAS

UNIZIK JOURNAL OF ENGINEERING AND APPLIED SCIENCES

UNIZIK Journal of Engineering and Applied Sciences 6(4), December (2026), 4073-4078
Journal homepage: https://journals.unizik.edu.ng/index.php/ujeas
PRINT ISSN: 2992-4383 || ONLINE ISSN: 2992-4391

Genetic Algorithm-Based Optimal Placement of a Static Var Compensator for Transmission Loss Reduction in the Nigerian 330 kV Grid

Amos Patrick Elonna
Transmission Company of Nigeria, Omotosho Sub Region, Omotosho, Ondo State
Aghara JachimmaVincent
Department of Electrical Engineering, Nnamdi Azikiwe University, Awka, Nigeria
Corresponding Authors' E-mail: [1]alpatosky@gmail.com, [2]jv.aghara@unizik.edu.ng

Abstract

This study evaluates genetic algorithm (GA)-based placement of a static Var compensator (SVC) for reducing active and reactive transmission losses in a MATLAB/Simulink model of the Nigerian 330kV transmission grid. The 26-bus network comprises 37 lines, 9 generators and 19 load points. Fast-decoupled power flow was used for steady-state analysis, while eigenvalue analysis selected bus 22 (reported damping ratio 0.9311) for controlled load variation. A TCR-FC SVC, modelled on a 100 MVA base and constrained to 0.95–1.05 p.u., was optimised by GA for location and control settings. The algorithm selected the bus 5 (Oshogbo)–bus 11 (Ayede) corridor. Performance was evaluated at bus-22 loads of 148, 222, 296, 370 and 444 MW. Mean active- and reactive-power loss reductions were 33.018% and 22.596%, respectively, while aggregate reductions were 34.40% and 23.40%. The maximum reductions occurred at 370 MW, where active and reactive losses decreased by 48.08% and 27.12%. The findings show that optimally located SVC compensation can reduce system losses across varying loading conditions, although the magnitude of improvement is operating-point dependent. Repeated optimisation, economic assessment and validation against operating measurements are recommended before practical implementation.

Keywords— genetic algorithm; Nigerian 330kV grid; power loss reduction; reactive power compensation; static Var compensator; transmission system.

1. Introduction

Electricity demand growth, network congestion and long-distance power transfer place increasing pressure on transmission systems. As loading rises, higher line current and reactive-power demand can worsen voltage conditions and increase transmission losses. Building new transmission corridors can relieve these problems, but expansion is capital-intensive and is often constrained by right-of-way and approval requirements. For this reason, flexible AC transmission system (FACTS) controllers continue to be studied as a way of obtaining more usable capacity from existing networks. Recent SVC studies have shown that shunt reactive-power support, when properly placed, can improve voltage performance and reduce network losses (Abdulrazzaq, 2015; Chetan and Vadirajacharya, 2015; Hasbullah et al., 2018; Al-Saidi et al., 2023).

A static Var compensator is a shunt-connected FACTS controller that regulates bus voltage by changing the reactive power exchanged with the network. Its benefit depends strongly on where it is installed and how its control variables are set; an SVC placed at an unsuitable location may give only a small system-wide benefit. This has made SVC placement and sizing an optimisation problem rather than a simple choice of the lowest-voltage bus. Recent studies have used population-based and mathematical optimisation methods for this purpose, including flower-pollination and galaxy-based search, genetic and hybrid algorithms, and mixed-integer optimisation (Sravan et al., 2015; Kumar et al., 2016; Zhang et al., 2017; Sen et al., 2019; Merah et al., 2022).

The novelty of the present study is not the first use of an SVC or the first application of a genetic algorithm to FACTS placement. Its novelty lies in the way these tools are combined with a controlled loading study on the Nigerian 26-bus, 330kV network. Eigenvalue analysis is first used to select bus 22 for systematic load variation; the GA then determines the SVC location and control settings; and the same optimised configuration is finally tested at five progressively higher loading levels from 148 to 444 MW. This makes it possible to observe whether the loss-reduction benefit remains consistent as the network operating point changes. The study also reports active and reactive losses separately for every loading case and provides both scenario-average and aggregate reductions. The integrated eigenvalue-guided loading and GA-based SVC assessment is therefore the specific innovative feature examined in this work.

The literature review also shows a clear distinction between this study and closely related work. Studies carried out on benchmark or non-Nigerian systems have demonstrated the value of optimised SVC allocation, but they do not reproduce the operating characteristics of the Nigerian network (Alvarez et al., 2018; Sen et al., 2019; Merah et al., 2022). Within Nigeria, Ayodele et al. (2016) studied SVC application on the 330kV grid mainly from a transient-stability perspective, using fault response and critical clearing time rather than GA-based multi-load loss minimisation. Adebisi et al. (2024) is the closest published study identified: it applied GA-based SVC placement to a Nigerian 28-bus, 330 kV model and compared the GA solution with a first-principle placement approach. The present study differs categorically by using a 26-bus network model, fast-decoupled load flow, eigenvalue-guided selection of a controlled loading bus, five distinct loading levels, and scenario-by-scenario quantification of both active and reactive loss reductions. Thus, the gap addressed here is not the absence of GA-SVC studies in Nigeria; it is the limited evidence, in the literature reviewed, on how the loss-reduction performance of a GA-optimised SVC changes across progressively stressed operating points when the loading location is selected through eigenvalue analysis.

2.0 Materials and methods

2.1 Study system and simulation environment

A simulation-based quantitative design was adopted. The Nigerian 330kV transmission network was implemented in MATLAB/Simulink using generator voltage-source models, transmission-line resistance and reactance data, load-bus demand data and measurement blocks for voltage, current and power flow. The model contained 26 buses, 37 transmission lines, 9 generators and 19 load points. Figure 1 shows the case-study network as implemented in Simulink.

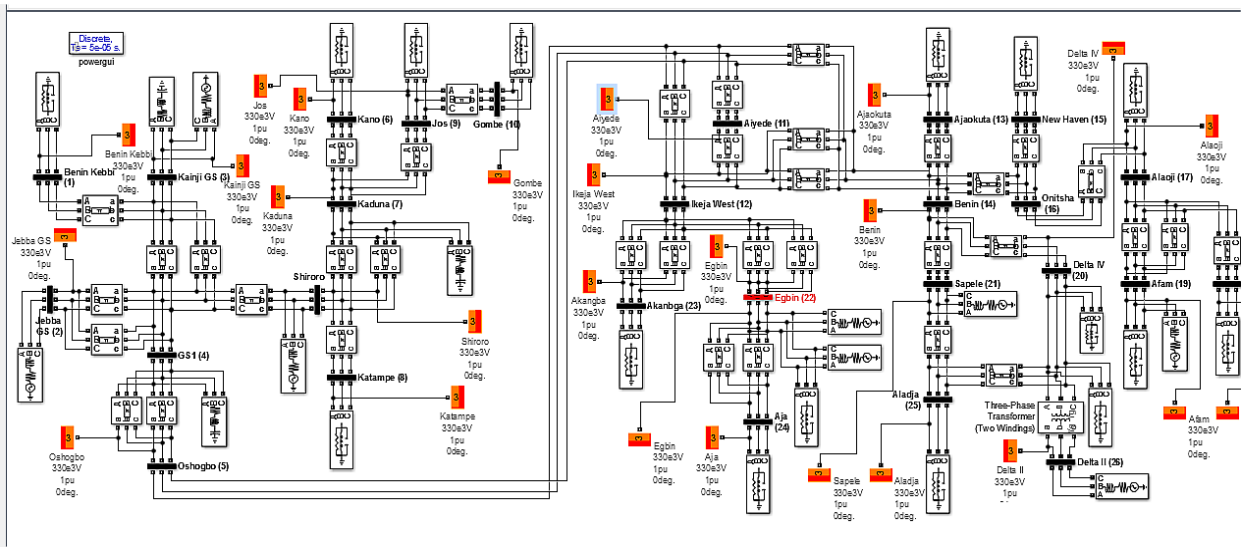

Figure 1. MATLAB/Simulink representation of the Nigerian 330 kV transmission network used in the study.

Table 1. Key modelling and optimisation settings

Item	Study setting
Network	Nigerian 330 kV grid: 26 buses, 37 lines, 9 generators and 19 load points
Power-flow method	Fast-decoupled power flow (FDPF)
SVC configuration	Thyristor-controlled reactor–fixed capacitor (TCR-FC)
Power base	100 MVA
Bus-voltage bounds	0.95–1.05 p.u.
GA decision variables	SVC location, VcR and VvR settings
Reported parameter ranges	VcR: 0.0001–0.3; VvR: 0.8–1.2
Fitness objective	Minimisation of total transmission power loss
Load-variation bus	Bus 22; reported damping ratio = 0.9311
Load cases	148, 222, 296, 370 and 444 MW
Optimal SVC line	Bus 5 (Oshogbo)–bus 11 (Ayede)

2.2 Load-flow formulation and SVC representation

The fast-decoupled power-flow method was used because its simplified Jacobian structure reduces repeated factorization and is computationally convenient when many trial solutions must be evaluated during optimisation. For each converged solution, bus voltages, line flows and total system losses were calculated. The TCR-FC SVC was represented as a variable shunt susceptance: the capacitive branch supplied reactive power when voltage support was required, while the controlled reactor absorbed reactive power when the bus voltage exceeded its reference. Comparable SVC optimisation studies also treat the device as a controllable source of shunt reactive support whose location and settings influence voltage and network losses (Alvarez et al., 2018; Sen et al., 2019; Merah et al., 2022). The model used a 100 MVA base and enforced a steady-state voltage band of 0.95–1.05 p.u. The SVC was assumed not to consume real power; its effect on active loss arose indirectly through changes in voltage, reactive-power circulation and line current.

2.3 Eigenvalue-based selection of the loading bus

Eigenvalue analysis was applied to identify a stable bus for controlled load variation. The thesis model reported that bus 22 had the highest damping ratio among the candidate buses, $\zeta = 0.9311$, and was therefore selected for the loading experiment. Loads at the remaining buses were held at their demand values. The load at bus 22 was increased from 148 MW to 444 MW in 74 MW increments, producing the five test conditions used in the comparative analysis.

2.4 Genetic-algorithm placement procedure

Each GA chromosome contained the discrete SVC installation location and two continuous control-setting variables, VcR and VvR. The reported search ranges were 0.0001–0.3 for VcR and 0.8–1.2 for VvR. Candidate solutions were injected into the load-flow model, after which the total power loss was evaluated as the fitness criterion. Selection, crossover, mutation and replacement produced successive populations while voltage and SVC operating constraints were enforced. The reported implementation used six optimisation iterations for a single SVC. The best solution placed the device on the line connecting bus 5 (Oshogbo) and bus 11 (Ayede). Figure 2 summarises the integrated analysis procedure.

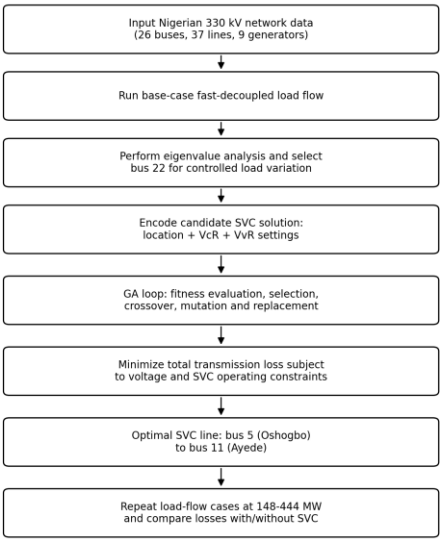

Figure 2. Integrated load-flow, eigenvalue and genetic-algorithm procedure.

2.5 Performance metric

For each loading scenario, the percentage reduction in active or reactive loss was calculated as:

$$\text{Loss reduction (\%)} = [(L_{without} - L_{with}) / L_{without}] \times 100$$

where Lwithout and Lwith denote the total system loss before and after SVC installation, respectively. Mean percentage reduction was obtained by averaging the five scenario-specific percentages. Aggregate reduction was also calculated from the sums of the five loss values to show the load-weighted effect.

3.0 Result and Discussion

3.1 Loss comparison across loading conditions

The optimised SVC was evaluated by checking whether it reduced system losses at every tested loading level. Table 2 shows that it did. The five-case active-loss total fell from 109.1870 p.u. without the SVC to 71.6306 p.u. with the SVC, while the reactive-loss total fell from 333.4050 to 255.3810 p.u. The arithmetic mean of the five scenario reductions was 33.018% for active loss and 22.596% for reactive loss. When the losses were summed first and then compared, the

aggregate reductions were 34.40% and 23.40%, respectively. The fact that both quantities decreased in all five cases is important because it shows that the selected SVC location was not beneficial only at the base loading point.

The magnitude of these reductions is close to results reported for another Nigerian 330kV network. Adebisi et al. (2024) reported that GA-based SVC placement reduced total active loss from 181.479 to 115.675 MW, equivalent to about 36.26%, and reactive loss from 145.323 to 109.336 MVAr, about 24.76%. The present aggregate reductions of 34.40% and 23.40% are slightly lower but of the same order. This agreement supports the general loss-reduction effect of optimised SVC placement on Nigerian transmission models. It should not, however, be interpreted as a direct ranking of the two methods because the studies use different network sizes, load-flow formulations, operating points and loss bases.

Table 2. Active and reactive power losses with and without the optimally placed SVC

Load at bus 22 (MW)	Active loss (p.u.)		Reactive loss (p.u.)		Active reduction (%)	Reactive reduction (%)
	Without SVC	With SVC	Without SVC	With SVC		
148	13.0690	8.7316	49.5517	38.2690	33.19	22.77
222	15.2987	11.1260	51.2685	45.1170	27.27	12.00
296	19.0927	14.0860	72.4598	53.4690	26.22	26.21
370	29.9566	15.5530	78.7110	57.3640	48.08	27.12
444	31.7700	22.1340	81.4138	61.1620	30.33	24.88
Mean	21.8374	14.3261	66.6810	51.0762	33.018	22.596
Total	109.1870	71.6306	333.4050	255.3810	34.40*	23.40*

**Aggregate reduction calculated from the five-case totals; the mean row is the arithmetic mean of the scenario percentages.*

3.2 Active-power loss reduction

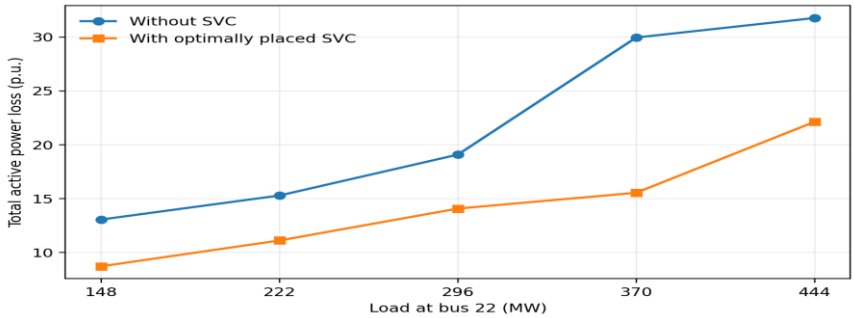

Figure 3. Total active-power loss as a function of loading at bus 22.

Figure 3 shows that active loss increased as the load at bus 22 increased, but the compensated network remained below the uncompensated network at every loading point. At 148 MW, active loss decreased from 13.0690 to 8.7316 p.u., a reduction of 33.19%. The smallest proportional reduction occurred at 296 MW (26.22%). The largest occurred at 370 MW, where the loss fell from 29.9566 to 15.5530 p.u. (48.08%). Even at the maximum tested load of 444 MW, the SVC reduced active loss by 30.33%. These results show that the SVC continued to provide a system-level benefit as loading increased, although the percentage improvement did not rise in a simple linear pattern.

A useful numerical comparison is provided by Kumar et al. (2016), who studied an IEEE 14-bus system and reported a reduction in real-power loss from 8.75 to 5.63MW when an SVC was included in their galaxy-based optimal-power-flow solution, corresponding to about 35.66%. The 34.40% aggregate active-loss reduction in the present study is very close to that value, while the 48.08% reduction obtained at 370MW is higher for that particular operating point. In contrast, Al-Saidi et al. (2023), using real data from Oman's main interconnected system and a multi-objective PSO formulation, reported an overall loss reduction of roughly 2%. The wide spread in reported percentages reinforces an important point: the benefit of SVC compensation depends on the network, loading pattern, device limits and optimisation objective, so percentage loss reductions should be compared as context-specific results rather than as proof that one algorithm is universally superior.

3.3 Reactive-power loss reduction

Reactive loss followed the same broad trend in Figure 4, but the size of the reduction varied more noticeably between cases. The reduction ranged from 12.00% at 222MW to 27.12% at 370MW. At 444MW, reactive loss

decreased from 81.4138 to 61.1620 p.u., equivalent to 24.88%. This behaviour is consistent with the role of an SVC: supplying or absorbing reactive power locally changes the reactive component of line current and can reduce the amount of reactive power that must travel through the transmission network (Alvarez et al., 2018; Hasbullah et al., 2018).

The 23.40% aggregate reactive-loss reduction obtained here is also comparable with the approximately 24.76% reduction calculated from the results reported by Adebisi et al. (2024) for their Nigerian 28-bus study. At the 370MW operating point, the present reduction reached 27.12%, whereas at 222MW it was only 12.00%. The comparison therefore supports two conclusions at once: optimised SVC placement can produce a substantial reduction in reactive loss on Nigerian transmission models, but the size of that reduction is sensitive to the operating condition.

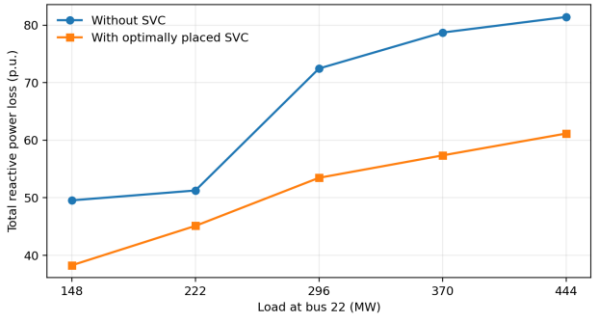

Figure 4. Total reactive-power loss as a function of loading at bus 22.

3.4 Interpretation of the non-linear response

The percentage improvement was not monotonic with loading. The 370MW case, in particular, produced a much larger active-loss reduction than the neighbouring 296 and 444MW cases. This suggests that SVC effectiveness is governed by the electrical state of the network, not by total demand alone. As load changes, bus voltages, reactive-power requirements, line currents and the distribution of power flows also change. An SVC located on one corridor can therefore become especially effective at a particular operating point and less effective at another. The source simulations also show that some individual line losses can rise after SVC installation because compensation redistributes power flow, even though the total system loss decreases. For planning purposes, the system-wide result is therefore more meaningful than judging the controller from a single line.

This non-linear response is consistent with the broader direction of recent reactive-power planning research. Karmakar and Bhattacharyya (2021) evaluated VAR planning across multiple load levels and showed why compensation decisions should be tested under more than one operating condition. Their formulation included operating and investment costs, whereas the present study is deliberately narrower and concentrates on active and reactive transmission losses. Merah et al. (2022) likewise emphasised joint optimisation of SVC siting and sizing. The present work follows the same principle of optimising location and control variables, but adds an eigenvalue-guided loading experiment on a Nigerian 330 kV model. This distinction is important because the results here show directly that the percentage loss reduction can change substantially even when the SVC location is unchanged.

3.5 Specific distinction from existing literature

The contribution of this study can therefore be stated categorically. It is not presented as the first study to use an SVC, the first to optimise SVC placement, or the first to apply a GA to the Nigerian 330kV grid. Compared with benchmark and non-Nigerian studies, its difference is the use of the specified Nigerian 26-bus transmission model. Compared with Ayodele et al. (2016), its focus is steady-state multi-load loss reduction rather than transient fault response and critical clearing time. Compared with Adebisi et al. (2024), the closest related Nigerian GA-SVC study, it used a different network model and load-flow formulation and, more importantly, combines eigenvalue-guided selection of the stress bus with five progressive loading cases and separate active/reactive loss reporting at each operating point. The specific contribution claimed in this paper is therefore the multi-loading, eigenvalue-guided assessment of a GA-optimised SVC and the demonstration that its loss-reduction benefit is operating-point dependent.

4.0 Conclusion

This study examined genetic-algorithm-based optimal placement of a TCR-FC static Var compensator for reducing transmission losses in a 26-bus model of the Nigerian 330 kV grid. The main question was whether an optimally placed SVC would continue to reduce active and reactive losses as the network was subjected to progressively

higher loading. The results support the central argument of the study: careful SVC placement can improve transmission efficiency, but the size of the benefit depends on the operating point.

Eigenvalue analysis selected bus 22 for controlled load variation, and the GA identified the bus 5 (Oshogbo)–bus 11 (Ayede) corridor as the preferred SVC location. Across loads from 148 to 444 MW, the compensated system recorded lower active and reactive losses in every case. Mean reductions were 33.018% for active loss and 22.596% for reactive loss, while aggregate reductions were 34.40% and 23.40%. The strongest response occurred at 370 MW, where active and reactive losses were reduced by 48.08% and 27.12%, respectively. The non-monotonic pattern across the five cases is a key finding because it shows that SVC performance should not be inferred from a single loading condition.

The practical significance of these findings is that optimised shunt compensation can help reduce avoidable losses on an existing transmission network without immediately adding new transmission corridors. In relation to available literature, the numerical results are broadly consistent with other optimised SVC studies, including recent Nigerian work, while the methodological contribution of this paper is the eigenvalue-guided, multi-loading evaluation of the GA-selected SVC configuration. Future studies should repeat the GA with fully reported population, crossover, mutation and convergence settings; test N−1 contingencies and dynamic faults; compare SVC performance with other FACTS technologies such as STATCOM and TCSC; include investment, operating and maintenance costs; examine uncertainty in load and network parameters; and validate the model against measurements from the operating Nigerian grid

5. References

Adebisi, O.I., Ogundare, A.B., Olajuwon, B.J., Adebeshin, A., 2024. Application of genetic algorithm based optimal placement of static Var compensator for the Nigerian 330 kV electricity grid performance enhancement. Arid Zone Journal of Engineering, Technology and Environment, 20(1), 133–150.

Abdulrazzaq, A.A., 2015. Improving the power system performance using FACTS devices. IOSR Journal of Electrical and Electronics Engineering, 10(2), 41–49.

Al-Saidi, M., Al-Badi, A., Onen, A., Elhaffar, A., 2023. Optimal location and size of static Var compensators (SVC) to enhance the voltage profile on the main interconnected system in Oman. Energies, 16(19), 6802.

Alvarez, A.M., Rodríguez-Gallegos, C., Jayaweera, D., 2018. Optimal planning and operation of static VAR compensators in a distribution system with non-linear loads. IET Generation, Transmission & Distribution, 12.

Ayodele, T.R., Ogunjuyigbe, A.S.O., Oladele, O.O., 2016. Improving the transient stability of Nigerian 330 kV transmission network using static Var compensation Part I: The base study. Nigerian Journal of Technology, 35(1), 155–166.

Chetan, W.J., Vadirajacharya, K., 2015. Performance improvement of power system through static VAR compensator using sensitivity-indices analysis. Proceedings of the 2015 IEEE International Conference on Energy Systems and Applications. IEEE.

Hasbullah, Mulyadi, Y., Febriana, Y., Abdullah, A.G., 2018. Optimization placement of static Var compensator on a 150 kV electrical transmission system based on smart computation. IOP Conference Series: Materials Science and Engineering, 306, 012056.

Karmakar, N., Bhattacharyya, B., 2021. Hybrid intelligence approach for multi-load level reactive power planning using VAR compensator in power transmission network. Protection and Control of Modern Power Systems, 6, 26.

Kumar, B.S., Suryakalavathi, M., Kumar, G.V.N., 2016. Optimal power flow with static VAR compensator using galaxy based search algorithm to minimize real power losses. Procedia Computer Science, 92, 42–47.

Merah, H., Gacem, A., Ben Attous, D., Lashab, A., Jurado, F., Sameh, M.A., 2022. Sizing and sitting of static VAR compensator (SVC) using hybrid optimization of combined cuckoo search (CS) and antlion optimization (ALO) algorithms. Energies, 15(13), 4852.

Sen, D., Ghatak, S.R., Acharjee, P., 2019. Optimal allocation of static VAR compensator by a hybrid algorithm. Energy Systems, 10(3), 677–719.

Sravan, K.B., Suryakalavathi, M., Nagesh Kumar, G.V., 2015. Optimal power flow with static VAR compensator based on flower pollination algorithm to minimize real power losses. Proceedings of the 2015 Conference on Power, Control, Communication and Computational Technologies for Sustainable Growth (PCCCTSG). IEEE.

Zhang, X., Shi, D., Wang, Z., Huang, J., Wang, X., Liu, G., Tomsovic, K., 2017. Optimal allocation of static Var compensator via mixed integer conic programming [Preprint]. arXiv.