JEAS

JOURNAL OF ENGINEERING AND APPLIED SCIENCES

Journal of Engineering and Applied Sciences, Volume 19, Number 1, December 2021, 506 - 518

Genetic Algorithm Based PID Controller Tuning Model for Active Suspension System of Self-Driving Vehicle

Ozor G.O[1], Okafor E.C[2] and Azubogu A.C.O[3]
[1]Computer Engineering, Enugu State University of Science and Technology
[2]Computer Engineering, Enugu State University of Science and Technology
[3]Electronic and Computer Engineering, Nnamdi Azikiwe University
[*]CorrespondingAuthor's E-mail: ozor.godwin@esut.edu.ng

Abstract
The hunt for a high-performance self-driving vehicle in terms of ride comfort and stability has triggered research into the design, modeling, and simulation of active suspension systems. To maximize the efficiency of a self-driving vehicle's suspension systems in terms of chassis vibration caused by road excitation a simple control mechanism with a high precision level was required. The suspension system's PID controller was tuned using a Genetic Algorithm in this paper. The model was developed and simulated in MATLAB and the results obtained compared with the system without a controller is 33.89% and 95.89% for the settling time and rise time respectively, thereby reducing the body acceleration and suspension travel.

Keywords:vibration control, genetic algorithm, PID controller, quarter car, comfort ride

1. Introduction

The primary function of the vehicle suspension system is to separate the wheels of the vehicle from the vehicle body and eliminate the uncomfortable jerks that passengers can experience due to road roughness. In any basic suspension system, there will be a spring element for storing energy due to road roughness and a damper to prevent the spring from expanding too quickly. The suspension system has improved passenger comfort and safety as a result of recent developments in the automobile industry (Ammar & Ameen 2018). There are some limitations to passive suspension systems because of their fixed vibration isolation parameters. Many researchers are working on active and semi-active suspension systems as a result of this problem. This suspension system uses a variety of control strategies and controllable dampers to provide a comfortable ride at a wider frequency range (Farong et al. 2018).

In general, three types of suspension systems have been studied extensively by several researchers using various techniques and algorithms: passive, semi-active, and active suspension systems. As compared to semi-active and active suspension systems, the passive suspension system performed poorly in terms of vehicle stability. The selection of spring stiffness and damper coefficient determines the dynamic behavior of passive automotive suspension systems (Li & Zhu, 2018). The passive system's fixed damper and spring components are unable to absorb or produce enough energy to support the load or road damage imposed on the vehicle system (Segla& Reich 2007). A variable damper or another variable dissipation component in the automotive suspension is used in the semi-active suspension system (Tang et al. 2020). While passive and semi-active suspension systems rely on internal energy, active suspension systems use an external source to generate force to achieve desired performance (Cui et al. 2017). As a result of its outstanding control characteristics and performance, active suspension systems are widely used in automobiles.

The ride comfort and road handling are the two main performance indicators for the vehicle suspension, but they are often at odds with each other. Improving the ride comfort reduces road handling, as an example (Su 2017). Due to this, it is essential to find an effective active suspension system management system to balance the relationships between these two performance indices. According to Mohammadi&Ganjefar (2017), a quarter-car active

suspension system can be designed with a minimum time controller using a singular perturbation method. Wang et al. (2017) proposed a new design method of fractional skyhook damping control for full-car suspension based on the principle of modal coordinate transformation. Huang et al. (2018) presented a novel control strategy for a nonlinear uncertain vehicle active suspension system without using any function approximators. Bououden&Chadli (2016) designed a robust predictive control for a nonlinear active suspension system. Kumar et al. (2018) introduced the self-tuned robust fractional order fuzzy PD (proportion and differential) controller for uncertain and nonlinear active suspension system, but their tuning method requires human experience to construct the fuzzy rules Deepika et al. (2018). Bharali (2017) proposed the linear quadratic regulator (LQR) and fuzzy logic controller for active suspension system.

There is a need to calculate the optimal values for suspension parameters in order to have the best possible riding comfort and road handling characteristics. Experiments on suspension systems have been carried out for many years to determine what the optimal parameters are. As a result of new optimization techniques, it is now possible to calculate optimal suspension parameters with greater efficiency than in the past. One of the most efficient optimization methods, the genetic algorithm (GA), is widely used in literature (Mahesh et al. 2016). GA is closely related to industrial applications, which consider the optimization of parameters with constraints, targets, and dynamic components. Almeida & Ribeiro (2017) presented a GA for the optimization of the stacking sequence to improve the strength of a cylindrical shell under internal pressure.

To find solutions to problems, GA uses principles from natural genetic populations. A population of chromosomes, which represent potential solutions to a concrete problem, is maintained over time through a process of competition and controlled variation. Selective breeding, also known as selection, is the process by which chromosomes are used to create new ones in the population. In order to create the new ones, genetic operators such as cross over and mutation are used. The GA optimization technique is used to determine the optimal suspension system parameters in this paper. Optimization's objective function depends on the variance of dynamic load resulting from the vibrating vehicle's vibrational motion. To minimize settling time and rise time, optimum values of suspension parameters calculated using GA will help. This will improve ride comfort as well as road handling.

2.0 Material and methods

The quarter car model was chosen because all four chambers of the tire and suspension systems of a car are symmetrical. Hence quarter car model was used to develop a mechanism for controlling vibration in vehicles, especially self-driving vehicles on uneven road profiles. The method is divided into three parts. The first step was to derive the mathematical dynamics of a quarter car. The second was the configuration of the adopted controller, which in this paper is PID. The final was the tuning of the PID controller with a good optimization tool, which is a genetic algorithm developed and used in the research. The simulation was run, and the results are shown in the results section of this paper.

2.1 Dynamic of Suspension System of a Vehicle

The suspension analysis is based on the simplified quarter car model which has been shown in Figure 1. The simplified model consists of the sprung mass, (vehicle body), m_{sm} and unsprung mass (wheel body), m_{usm} . The tire is modeled as a linear spring with stiffness k_{usm} . The suspension system is controlled by an actuator force, f_a which supplies the needed energy to the system based on the excitation response. X_r represents the road disturbance which is treated as a sine function.

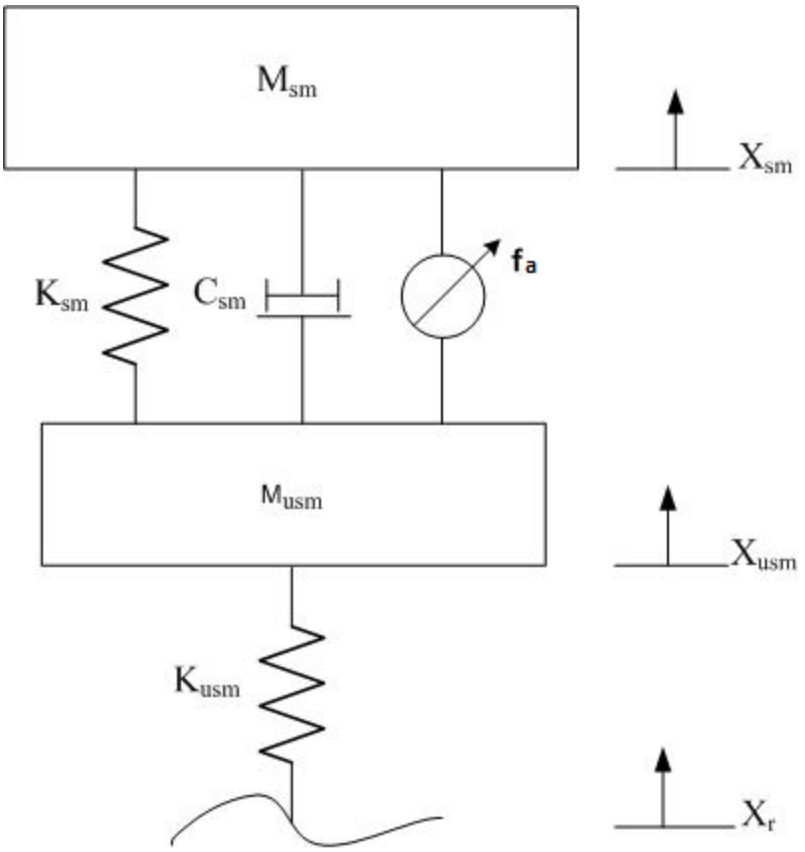

Figure 1: Quarter Car active suspension system model

The quarter car suspension system model parameters as indicated in figure 1 are listed below;

System parameters

a) M_{sm}: car chassis mass
b) M_{usm} : wheel mass
c) K_{sm} : spring constant of suspension system
d) K_{usm} : spring constant of wheel and tire
e) C_{sm} : damping constant of suspension system
f) f_a : actuator force
g) X_{sm} : body displacement
h) X_{usm} : wheel displacement
i) X_r : road profile

A PID controller, as seen in figure 2, controls the actuator force that feeds external energy to the suspension vehicle environment. The PID controller tuned with an evolution algorithm, known as the genetic algorithm, controls the dynamics of the sprung mass and unsprung mass as a result of an uneven road profile.

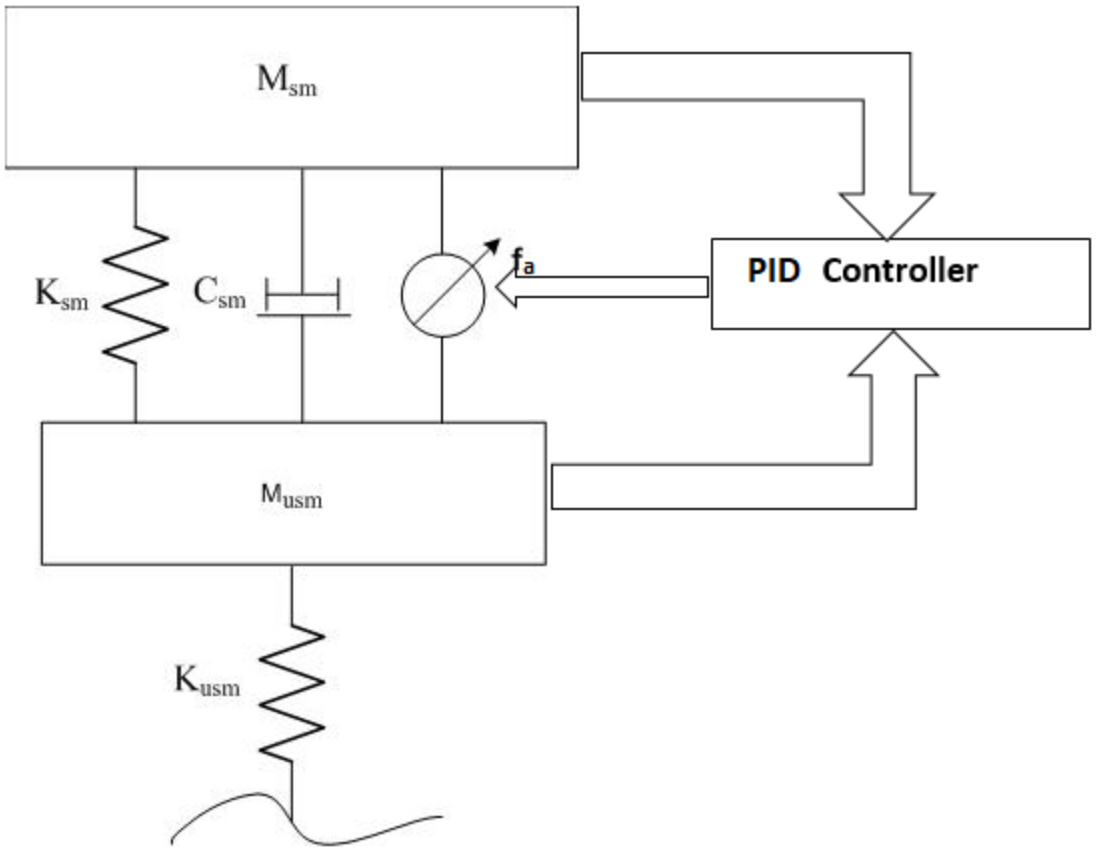

Figure 2: Actuator force controlled by PID controller

The dynamics of a suspension system around a sprung mass and an unsprung mass are represented in equations 1 and 2 using Newton's laws of motion.

$$M_{sm}\frac{d^2x_{sm}}{dt^2} + C_{sm}\frac{d(x_{sm}-x_{usm})}{dt} + K_{sm}(x_{sm} - x_{usm}) = f_a \quad (1)$$

$$M_{usm}\frac{d^2x_{usm}}{dt^2} - C_{sm}\frac{d(x_{sm}-x_{usm})}{dt} - K_{sm}(x_{sm} - x_{usm}) + K_{usm}(x_{usm} - x_r) = -f_a \quad (2)$$

Identifying and labeling of the state variables as x_1, x_2, x_3, x_4 then

$x_1 = x_{sm},\ x_2 = \dot{x}_{sm}, x_3 = x_{usm}, x_4 = \dot{x}_{usm}$

$$M_{sm}\ddot{x}_1 + C_{sm}(x_2 - x_4) + K_{sm}(x_1 - x_3) = f_a \quad (3)$$

$$\ddot{x}_1 = -(\frac{1}{M_{sm}})[C_{sm}(x_2 - x_4) + K_{sm}(x_1 - x_3) - f_a] \quad (4)$$

But $\dot{x}_2 = \ddot{x}_1$

$$\dot{x}_2 = -(\frac{1}{M_{sm}})[C_{sm}(x_2 - x_4) + K_{sm}(x_1 - x_3) - f_a] \quad (5)$$

$$M_{usm}\dot{x}_3 - C_{sm}(x_2 - x_4) - K_{sm}(x_1 - x_3) + K_{usm}(x_3 - x_r) = -f_a \quad (6)$$

$$\ddot{x}_3 = (\frac{1}{M_{us\,m}})[C_{sm}(x_2 - x_4) + K_{sm}(x_1 - x_3) - K_{usm}(x_3 - x_r) - f_a] \quad (7)$$

But $\dot{x}_4 = \ddot{x}_3$

$$\dot{x}_4 = (\frac{1}{M_{usm}})[C_{sm}(x_2 - x_4) + K_{sm}(x_1 - x_3) - K_{usm}(x_3 - x_r) - f_a] \quad (8)$$

Summary of the state expression of a quarter car model of a suspension system of a car.

$\dot{x}_1 = x_2$

$\dot{x}_2 = -(\frac{1}{M_{sm}})[C_{sm}(x_2 - x_4) + K_{sm}(x_1 - x_3) - f_a]$

$\dot{x}_3 = x_4$

$\dot{x}_4 = (\frac{1}{M_{usm}})[C_{sm}(x_2 - x_4) + K_{sm}(x_1 - x_3) - K_{usm}(x_3 - x_r) - f_a]$

The quarter car suspension system state space model equations in matrix form

$$\begin{bmatrix}\dot{x}_1\\ \dot{x}_2\\ \dot{x}_3\\ \dot{x}_4\end{bmatrix} = \begin{bmatrix}0 & 1 & 0 & 0\\ \frac{-K_{sm}}{M_{sm}} & \frac{-C_{sm}}{M_{sm}} & \frac{K_{sm}}{M_{sm}} & \frac{C_{sm}}{M_{sm}}\\ 0 & 0 & 0 & 1\\ \frac{K_{sm}}{M_{usm}} & \frac{C_{sm}}{M_{usm}} & \frac{-K_{sm}-K_{usm}}{M_{usm}} & \frac{-C_{sm}}{M_{usm}}\end{bmatrix}\begin{bmatrix}x_1\\ x_2\\ x_3\\ x_4\end{bmatrix} + \begin{bmatrix}0 & 0\\ 0 & \frac{1}{M_{sm}}\\ 0 & 0\\ \frac{K_{usm}}{M_{usm}} & \frac{-1}{M_{usm}}\end{bmatrix}\begin{bmatrix}X_r\\ f_a\end{bmatrix} \quad (9)$$

$$[y] = \begin{bmatrix}1 & 0 & 0 & 0\\ 1 & 0 & -1 & 0\end{bmatrix}\begin{bmatrix}x_1\\ x_2\\ x_3\\ x_4\end{bmatrix} + \begin{bmatrix}0 & 0\\ 0 & 0\end{bmatrix}\begin{bmatrix}X_r\\ f_a\end{bmatrix}$$

The state space model of the suspension system of a car has been derived. The next section would be about the controller for the system.

2.2PID Controller

In their structures, early feedback control systems incorporate the principles of distinct or mixed proportional, integral, and derivative control actions, either implicitly or explicitly. Despite the availability of sophisticated tools, such as advanced controllers, the PID controller is still the most extensively used closed loop industrial process controller. The transfer function representation of parallel form of PID controller with derivative filter is given by:

$$u = K_p e(t) + K_i \int_0^t e(t)dt + K_d \frac{de(t)}{dt} \quad (10)$$

Where,

u is the controller output

$e(t)$ is the error signal,

$\int e(t)dt$ is the time integral of the error signal

$\frac{de(t)}{dt}$ is the time derivative of the error signal

The transfer function of the PID controller in equation 10 is as expressed in equation 11

$$G_c(s) = K_p + \frac{K_i}{s} + K_d s \quad (11)$$

Where K_p is the proportional gain, K_i is the integral gain and K_d is the derivative gain, N is the filter coefficient and s is the Laplace operator.

2.3Genetic Algorithm (GA)

The emergence of a number of non-classical, unorthodox, and stochastic search and optimization algorithms has altered the area of search and optimization in recent years. GA is a stochastic global optimal search approach that is inspired by two biological principles: natural selection and natural genetics mechanics. Because it starts with no knowledge of the correct solution, it is completely reliant on the responses of its surroundings. To find the optimal answer, evolution activities such as selection, reproduction, crossover, and mutation are performed. It begins the search with a number of independent points in the search space and searches in parallel for a viable solution. By avoiding local minima, the algorithm attempts to provide a global optimum. GA is used in this study to identify the PID tuning parameters that result in the best gains, which minimizes body acceleration and suspension deflection.

The GA tuning of PID for the optimal gains in the active suspension system was done in MATLAB programming language. A genetic algorithm-based user defined function was developed in MATLAB for optimization of PID gains. The process of developing the algorithm and tuning is as shown in figure 3 and also in figure 4 the flowchart of the process was shown.

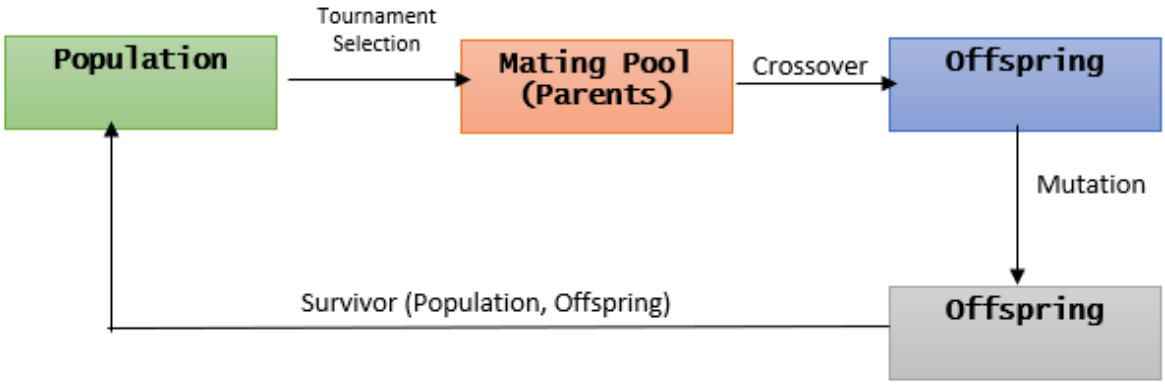

Figure 3: Genetic algorithm process chart.

In this study, the genetic algorithm process chart is explained using pseudocode. The tournament selection algorithm is also used in the study because to its simplicity and superior performance.

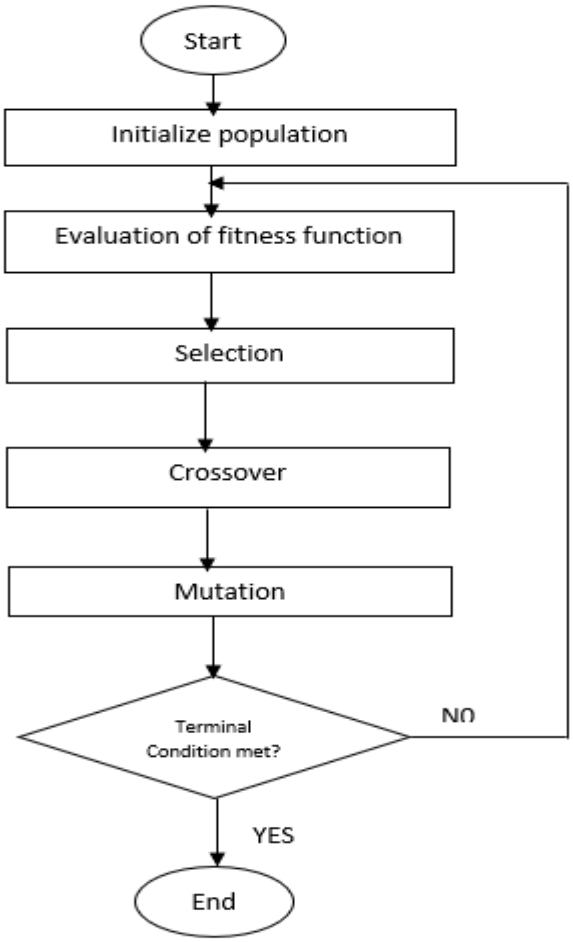

Figure 4: Genetic algorithm flowchart

Pseudocode

INPUT: Fitness function, lb, ub, Np, T, n, Pc, Pm, K

Where lb = lower boundary

Ub = upper boundary

Np = No of population

T = Number of iterations

n = no of bit for the variables

Pc = Crossover probability

Pm = Mutation

K = Tournament size

1. Initialize a random population (p) of binary string (size: NpxnD)
2. Evaluate fitness (f) of the population (P)

```
For t = 1 to T
    Perform tournament selection of tournament size ,k
        For i = 1 to Np/2
            Randomly choose two parents
              If r < Pc
                  Select the crossover site
                  Generate two offspring using SPC
               Else
                   Copy the selected parents as offspring
              End
        End
For l = 1 to Np
      Generate nD random numbers between 0 & 1
      Perform bitwise mutation of ith offspring
      Evaluate the fitness of offspring
End
```

Combine population and offspring as the survivors

End

Steps for the development of the genetic algorithm

STEP 1: initialization

Defining the decision variables, x(1), x(2), x(3)

Fixing the population size, maximum iterations, bit length, crossover probability, mutation probability.

Np = 4, T = 100, n =4 , Pc = 0.8 and Pm = 0.2

STEP 2 fitness function evaluation

By employing genetic algorithm, the performance criterion is related to the fitness function, and optimal PID parameters are derived by minimizing an objective parameter. A random binary solution was generated and also fitness function evaluated

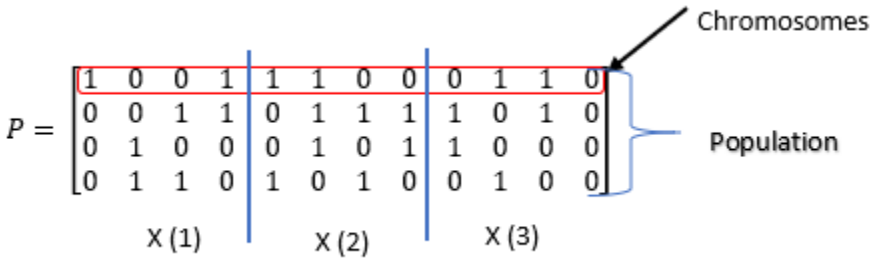

STEP 3: tournament selection

Two random candidates are selected for the tournament

$$P = \begin{bmatrix} 1 & 0 & 0 & 1 & 1 & 1 & 0 & 0 & 0 & 1 & 1 & 0 \\ 0 & 0 & 1 & 1 & 0 & 1 & 1 & 1 & 1 & 0 & 1 & 0 \\ 0 & 1 & 0 & 0 & 0 & 1 & 0 & 1 & 1 & 0 & 0 & 0 \\ 0 & 1 & 1 & 0 & 1 & 0 & 1 & 0 & 0 & 1 & 0 & 0 \end{bmatrix}$$

$$P_A = \begin{bmatrix} 18 & 24 & 14 \\ 6 & 14 & 20 \\ 8 & 10 & 16 \\ 12 & 20 & 8 \end{bmatrix}$$

$$f = \begin{bmatrix} 1096 \\ 632 \\ 420 \\ 608 \end{bmatrix}$$

Two candidates now selected at random

$$P_2 = [6 \quad 14 \quad 20], \qquad f_2 = 632$$

$$P_4 = [12 \quad 20 \quad 8], \qquad f_4 = 608$$

All the candidates (P_1, P_2, P_3, P_4) must compete twice to ensure even and fair competition.

STEP 4: crossover

Single point crossover was used in this work. The practice is to randomly select a position in the parent chromosome then exchanging sub-chromosome.

$$Parent1 = [0 \quad 1 \quad 1 \quad 0 \quad 1 \quad 0 \quad 1 \quad 0 \quad 0 \quad 1 \quad 0 \quad 0]$$

$$Parent2 = [0 \quad 1 \quad 0 \quad 0 \quad 0 \quad 1 \quad 0 \quad 1 \quad 1 \quad 0 \quad 0 \quad 0]$$

$$Offspring1 = [0 \quad 1 \quad 1 \quad 0 \quad 1 \quad 1 \quad 0 \quad 1 \quad 1 \quad 0 \quad 0 \quad 0]$$

$$Offspring2 = [0 \quad 1 \quad 0 \quad 0 \quad 0 \quad 0 \quad 1 \quad 0 \quad 0 \quad 1 \quad 0 \quad 0]$$

STEP 5 mutation

Number of chromosomes that have mutations in a population is determined by the mutation rate parameter

	offspring	**Random number for mutation(r)**	**output**
O1	[0110 1101 1000]	[0.8 0.2 0.9 0.4| 0.2 0.3 0.6 0.5| 0.4 0.8 0.6 0.5]	[0010 0101 1000]
O2	[0100 0010 0100]	[0.9 0.2 0.7 0.7| 0.3 0.5 0.0 0.0|0.5 0.7 0.9 0.1]	[0000 0001 0101]
O3	[0110 1011 1000]	[0.5 0.4 0.0 0.3| 0.1 0.7 0.3 0.5| 0.1 0.6 0.2 0.6]	[0100 0011 0010]
O4	[0100 0100 0100]	[0.6 0.7 0.4 0.0| 0.2 0.9 0.1 0.8| 0.5 0.9 0.0 0.4]	[0101 1110 0110]

The survived population for next generation or iteration is in the matrix below

$$P = \begin{bmatrix} 0 & 0 & 0 & 0 & 0 & 0 & 0 & 1 & 0 & 1 & 0 & 1 \\ 0 & 1 & 0 & 0 & 0 & 0 & 1 & 1 & 0 & 0 & 1 & 0 \\ 0 & 0 & 1 & 0 & 0 & 1 & 0 & 1 & 1 & 0 & 0 & 0 \\ 0 & 1 & 0 & 1 & 0 & 1 & 0 & 1 & 1 & 0 & 0 & 0 \end{bmatrix}, \qquad f = \begin{bmatrix} 101 \\ 116 \\ 372 \\ 420 \end{bmatrix}$$

3.0 Results and Discussions

A quarter model was used for the simulation, evaluation, and analysis of the performance of the proposed PID tuned with a Genetic Algorithm and other evolutional algorithms on an active suspension system in this work. Performance was compared with a passive suspension system for various road disturbances. Bump road profile is the road disturbances. The bump input simulates a vehicle coming out of an obstacle. As shown in Fig. 6, the bump's maximum height is 0.05m. As shown in Fig 7, the effect of the bump decreased. The driving resistance of the vehicle can be lowered as the feedback control strategies are implemented because vertical acceleration is reduced. MATLAB simulation and scripting with the defined parameter value as shown in Table1 have been carried out.

Table 1: Quarter car simulation parameters and values

Parameter	Value	Unit
M_{sm}	290	Kg
M_{usm}	40	Kg
K_{sm}	19960	N/m
K_{usm}	175500	N/m
C_{sm}	1290	N/m/s

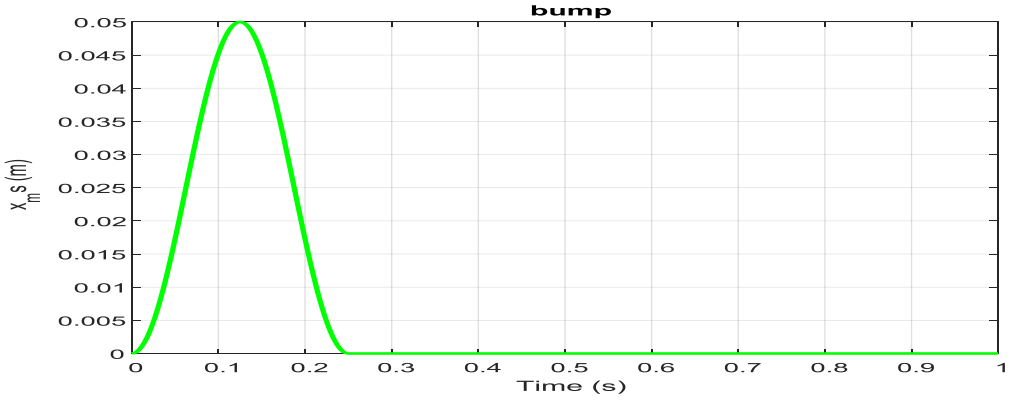

Figure 6:Road Bump disturbance.

The open-loop of the control system shows little sign of being in a steady-state compared to the close loop components in the system in terms of comfort ride and road handling as shown in Figure 7. Within the range of 600ms, the signal has returned to a vertical range of 0.01m which shows a significant improvement in the area of ride comfort. A small amount of actuating force in the absence of feedback control in Figure 7 shows that the open-loop system is an underdamped condition. As a result, passengers do feel a reaction to the retroactive signal, which lasts a long time, as shown in Figure 7, when a moving vehicle passes a 5cm road bump

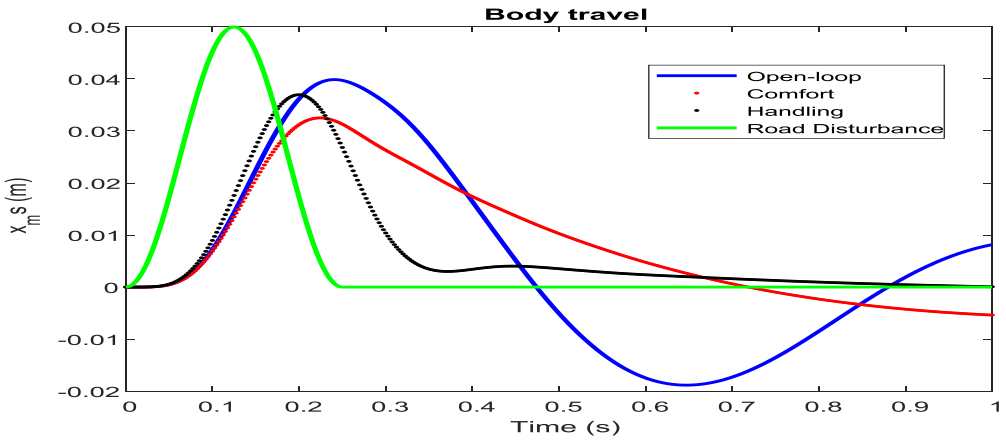

Figure 7: Effect of the road bump disturbance.

The PID controller optimized with a genetic algorithm improves the system's rise and settling times significantly. The results can be seen in table 2. The suspension is excited by driving conditions road excitation. The comparison results of suspension states (the sprung mass displacement, sprung mass acceleration, and unsprung mass displacement) produced by the two control methods (passive, active with PID controller) are shown in Figure 8-9, respectively. Compared with the passive suspension system, the active suspension system with the PID controller has a lower peak and less defection. Meanwhile, it should be pointed out that the proposed PID controller demonstrates smaller amplitude and faster transient convergence in terms of the sprung mass displacement, sprung mass acceleration, and unsprung mass displacement than the passive.

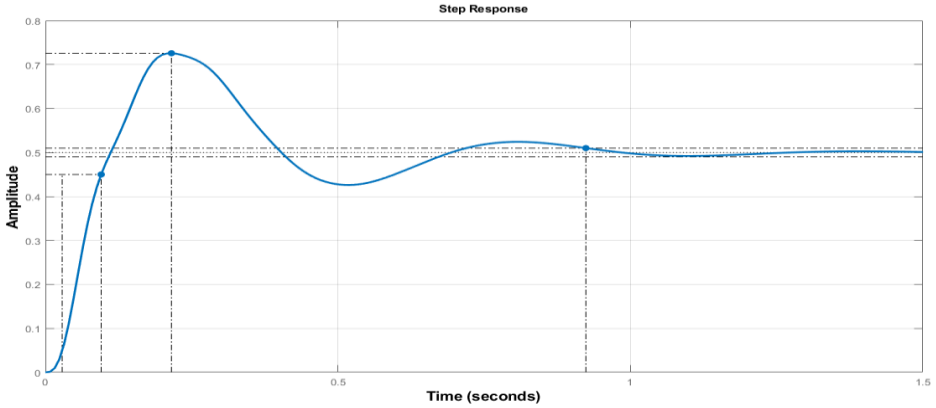

Figure 8: Step response of the passive suspension system

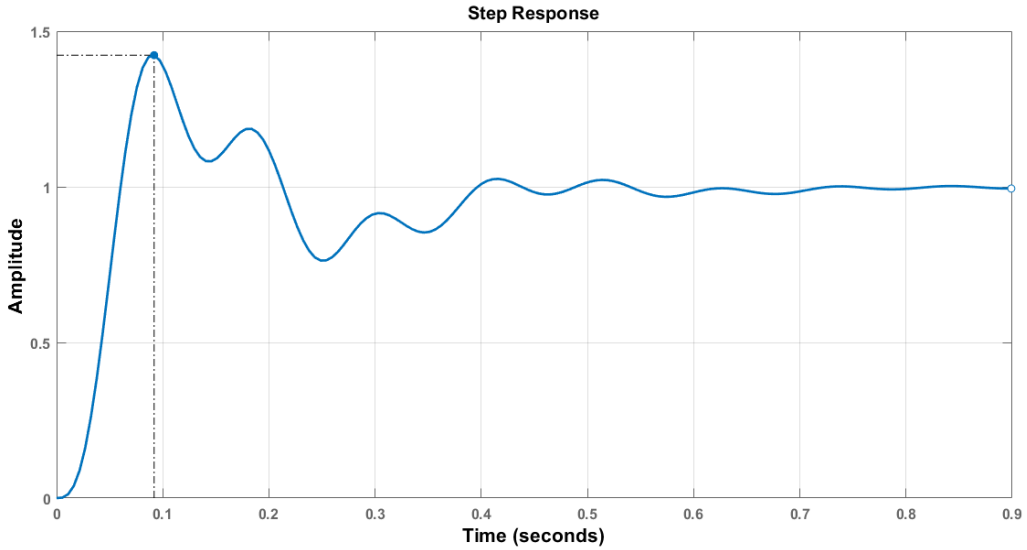

Figure 9: Step response of an active suspension system

On a step response, the active suspension system was optimized with PID gains of kp = 3.75, ki = 0.059692, and kd = 26.746, as shown in figure 9. Comparing active suspension to passive suspension, Table 2 reveals a significant improvement over the passive suspension. Signal overshoot is reduced, resulting in a lower body acceleration, as shown by the rising time and peak time. Figure 9 depicts the sprung-mass displacement response for the PID controller used in the research. It can be observed from this figure that the sprung-mass displacement peak value in the transient portion was 1.47cm for the PID controller tuned with a genetic algorithm. However, it can be concluded from this figure that active suspension resulted in a significant reduction in settling time, meaning fast recovery performance. For sprung-mass acceleration, table 2 shows that active suspension significantly reduces the peakacceleration value.

Table 2 Time domain properties of both Passive and Active suspension systems

	Passive	Active	Improvement
Settling time (sec)	0.9239	0.6900	33.89%
Rise time (sec)	0.0668	0.0341	95.89%
Peak time (sec)	0.2155	0.0919	134.49%

4.0. Conclusion

With the proposed PID controller tuned with GA in the paper, body displacement and acceleration are significantly reduced compared to a vehicle suspension without PID controller. According to a simulation of the proposed PID controller tuned with GA for active suspension system, vehicles have a more comfortable ride and road handling.Health risks resulting from sudden jerking or vertical displacement of the vehicle chassis will be reduced as a result of the model applied.

5.0 Recommendation

When it comes to suspension system stability, the authors suggest deep research in the frequency domain of the suspension control system, as well as hybrid evolutional algorithms

References

Almeida J.H.S., Ribeiro, M.L., 2017, 'Stacking sequence optimization in composite tubes under internal pressure based on genetic algorithm accounting for progressive damage' *Compos. Struct.* no. 178, pp 20–26.

Ammar, M.H., Ameen, A.N., 2018, 'Modeling, simulation, and control of half car suspension system using Matlab/Simulink.' *International Journal of Science and Research*, vol. 7, no. 1, pp. 351–362

Bharali, J., and Garg, N., 2017, 'Efficient Ride Quality and Road Holding Improvement for Active Suspension System' In Proceedings of the 14th IEEE India Council International Conference (INDICON), Roorkee, India, pp 15–17

Bououden, S., Chadli, M., 2016, 'A robust predictive control design for nonlinear active suspension systems' Asian *J. Control* Vol. 18, pp 122–132

Cui, M., Geng L, Wu Z 2017, 'Random Modeling and Control of Nonlinear Active Suspension', *Mathematical Problems in Engineering*, https://doi.org/10.1155/2017/4045796

Deepika D , Narayan, S., Kaur, S., 2018, 'Robust finite time integral sliding mode tracker for nth-order non-affine non-linear system with uncertainty and disturbance estimator' Math. *Comput. Simul*. Vol. 156, pp 364–376.

Farong, K., Jiafeng, D., Zhe, W., Dong, L., and Jianan, X., 2018, 'Nonlinear modeling and coordinate optimization of a semi-active energy regenerative suspension with an electro-hydraulic actuator.' Algorithms

Huang, Y., Na, J., Wu, X., Gao, G., 2018, 'Approximation-Free Control for Vehicle Active Suspensions with Hydraulic Actuator' IEEE Trans. *Ind. Electron*. Vol. 65, pp 7258–7267

Kumar, V., Rana, K.P.S., Kumar, J., Mishra, P., 2018, 'Self-tuned robust fractional order fuzzy PD controller for uncertain and nonlinear active suspension system' Neural Comput. *Appl*, Vol. 30, pp 1827–1843

Li J.Y and Zhu S 2018, 'Versatile behaviors of electromagnetic shunt damper with a negative impedance converter,' IEEE/ASME Trans. Mechatronics, vol. 23, no. 3, pp. 1415–1424

Mahesh, P.N., Gahininath, J.P., Rahul, N.P 2016, 'Optimization of nonlinear quarter car suspension–seat–driver model' *Journal of Advanced Research*, vol. 7, no. 6, pp. 991-1007

Mohammadi, Y., Ganjefar, S., 2017, ' Quarter car active suspension system: Minimum time controller design using singular perturbation method' *Int. J. Control Autom. Syst*. Vol 15, pp 2538–2550

Segla, S., Reich, S., 2007, 'Optimization and comparison of passive, active, and semi-active vehicle suspension systems' 12th IFToMM World Congress, Besançon (France)

Su, X., 2017, 'Master-Slave Control for Active Suspension Systems with Hydraulic Actuator Dynamics' IEEE Access, pp 3612–3621.

Tang, X., Ning, D., Du, H., Li, W., Gao, Y., Wen, W., 2020, 'A Takagi-Sugeno Fuzzy Model-Based Control Strategy for Variable Stiffness and Variable Damping Suspension,' in IEEE Access, vol. 8, pp. 71628-71641, doi: 10.1109/ACCESS.2020.2983998.

Wang, P., Wang, Q., Xu, X., Chen, N., 2017, 'Fractional Critical Damping Theory and Its Application in Active Suspension Control' Shock and Vibration https://doi.org/10.1155/2017/2738976