UNIZIK JOURNAL OF ENGINEERING AND APPLIED SCIENCES (UJEAS)

Research Article

Investigation of Hydrocarbon Associated Gas Separation in a Vertical Vessel: A Steady-State and Dynamic Simulation Using Aspen Hysys

Ezeh Ernest Mbamalu, Isah Yakub Mohammed, Yousif Abdalla Abakr

Special Issue
A Themed Issue in Honour of Professor Onukwuli Okechukwu Dominic (FAS).

This special issue is dedicated to Professor Onukwuli Okechukwu Dominic (FAS), marking his retirement and celebrating a remarkable career. His legacy of exemplary scholarship, mentorship, and commitment to advancing knowledge is commemorated in this collection of works.

Edited by
Chinonso Hubert Achebe PhD.
Christian Emeka Okafor PhD.

UJEAS

UNIZIK JOURNAL OF ENGINEERING AND APPLIED SCIENCES

UNIZIK Journal of Engineering and Applied Sciences 4(1), March (2025), 1706-1718
Journal homepage: https://journals.unizik.edu.ng/index.php/ujeas
PRINT ISSN: 2992-4383 || ONLINE ISSN: 2992-4391

Investigation of Hydrocarbon Associated Gas Separation in a Vertical Vessel: A Steady-State and Dynamic Simulation Using Aspen Hysys

Ezeh Ernest Mbamalu[1], Isah Yakub Mohammed[2,3*], Yousif Abdalla Abakr[4]
[1]Department of Chemical Engineering, Federal University Otuoke Bayelsa, Nigeria
[2]Department of Chemical Engineering, Abubakar Tafawa Balewa University Bauchi, Nigeria
[3]Material and Energy Laboratory, Faculty of Engineering Block A, Abubakar Tafawa Balewa University Yelwa Campus, Bauchi
[4]Department of Mechanical, Materials and Manufacturing Engineering, University of Nottingham Malaysia, Jalan Broga, Semenyih 43500, Selangor Darul Eshan, Malaysia
[*]Corresponding Author's E-mails: *ezehem@fuotuoke.edu.nd; yimohd@atbu.edu.ng*

Abstract

The global push for decarbonization has amplified the need for the sustainable utilization of conventional fossil fuels. Associated gas, a low-value byproduct of petroleum production frequently flared or vented, has gained attention as a viable solution for reducing the carbon footprint of petroleum operations. When converted into valuable products, it offers the potential to enhance the sustainability and efficiency of production systems. This study presents the separation of associated gas (methane, ethane, propane and n-butane) into various proportions in liquid and gas product streams using Aspen HYSYS® software 11 under both steady state and dynamic conditions. The flowsheet was developed using a Pen-Robinson thermodynamic fluid package with a stream flow rate of 1000 kgmole/h charged into a vertical separator. The effect of pressure drop within the column on the product stream separation was investigated in the steady state. The system responses for step changes in molar flow, vessel liquid level, vessel pressure and methane fraction in the vapour product stream were examined in the dynamic simulation using a proportional-integral-derivative (PID) controller. The steady-state result showed that the pressure drop within the column significantly affects separation efficiency, with methane showing the steepest decline in molar flow within the liquid stream product. The n-butane exhibited a non-linear optimal range, while the ethane and propane decreased steadily. In the dynamic state, the system can handle flow rates between 900–1100 kgmole/h, liquid levels of 20–30%, and pressures of 47–49 bar, while maintaining methane composition between 55–65%. The system attained stability by decreasing the rise time and reducing the overshoot and settling time of the flow controller. The Pressure controller has the highest proportional gain (1.00) for a strong response to changes, while methane composition control has the smallest integral time (0.07), indicating rapid adjustments for deviations. This study effectively describes the steady state and the dynamic behaviours of the associated gas separation system, providing critical information for process optimization and control.

Keywords: Petroleum; associate gas stream; Aspen HYSYS®; simulation; Steady state; Dynamic

1. Introduction

The world is grappling with an unprecedented environmental crisis as the harmful consequences of climate change become increasingly evident. Rising global temperatures, extreme weather events, and the accelerated melting of polar ice caps are but a few harbingers of the urgent need to address greenhouse gas emissions (Wang *et al.*, 2023). At the heart of this crisis lies the oil and gas industry, which contributes a substantial share of these emissions through the extraction and production of fossil fuels (Ezeh *et al.*, 2025) One particularly concerning aspect is the routine practice of flaring or venting associated gas that accompanies oil production. This associated gas, rich in methane, is released directly or combusted and flue gas discharged into the atmosphere, magnifying the industry's environmental impact and squandering valuable energy resources. For decades, associated gas has been regarded as an unwanted byproduct of oil extraction, an inconvenient waste stream with little consideration for its potential. The oil industry has primarily focused on crude oil

production, relegating associated gas to a secondary role. As a result, vast quantities of this gas have been routinely flared, resulting in the release of millions of tons of carbon dioxide into the atmosphere annually. This practice not only exacerbates climate change but also represents a lost opportunity to harness a valuable energy resource that could potentially contribute to the global energy transition (Wang *et al*., 2023).

As the consequences of climate change continue to escalate, the international community is increasingly recognizing the urgency of transitioning towards low-carbon and sustainable energy solutions. The Paris Agreement and other global initiatives have set ambitious targets for reducing greenhouse gas emissions, making it imperative to seek alternatives to conventional fossil fuels. Decarbonization is a crucial step towards mitigating the worst impacts of climate change. This necessitates innovative approaches to both energy production and consumption (Bellotti *et al.*, 2017). Among the available solutions, the separation and transformation of associated gas into sustainable energy carriers emerge as a compelling prospect. Associated gas consists predominantly of methane and a wide range of other hydrocarbon streams and heterocompounds. This requires a clear cut of valuable streams for a suitable downstream application. Generally, the separation of hydrocarbons is a critical operation in the oil and gas industry, playing a central role in refining, natural gas processing, and petrochemical manufacturing. Efficient separation processes are essential for maximizing product yield, ensuring energy efficiency, and minimizing operational costs. Among the various separation methods employed, vertical vessels, including separators and distillation columns, are commonly used due to their simplicity, reliability, and adaptability to different process conditions (Sharma *et al.*, 2024; Mbamalu *et al.*, 2025).

The dynamic and complex nature of hydrocarbon separation requires an in-depth understanding of phase behaviour, thermodynamic interactions, and the influence of operating conditions (Mohammed &, Mohammed., 2024). Achieving optimal separation under both steady-state and dynamic conditions demands advanced simulation and modelling tools. Aspen HYSYS, a robust process simulation software, has emerged as an indispensable tool for engineers and researchers in designing, optimizing, and analyzing separation processes (Mohamed Alshbuki & Mohamed Bey, 2024; Mohammed *et al.*, 2021). Its ability to simulate steady-state and dynamic scenarios enables a comprehensive evaluation of system behaviour under varying operational constraints (Olugbenga *et al.*, 2021; Valdés *et al.*, 2024). This study focuses on the investigation of hydrocarbon separation within a vertical vessel, using Aspen HYSYS to explore both steady-state and dynamic process conditions. Vertical vessels are integral to phase separation, where they facilitate the segregation of liquid and vapour phases, and are often employed in upstream production facilities and downstream processing units. Understanding their performance characteristics under different operational states is vital for improving system reliability, enhancing efficiency, and ensuring safe operations.

2.0 Materials and Methods

Modelling and simulation of associated gas separation were carried out in the Aspen HYSYS® V11 environment. The process flow diagram was developed with Peng-Robinson thermodynamic and property data (it provides more accurate vapour-liquid equilibrium (VLE) estimations than other EOS in hydrocarbon mixtures) under steady state and dynamic conditions with the following assumptions:

- The associate gas consists of methane, ethane, propane and n-butane at 5 ^{o}C and 5000 kPa.
- The associated gas constitutes 50% methane, 25% ethane, 15% of propane and 10% of n-butane.
- 50% valve opening in the steady state.
- Liquid and vapour phases achieve thermodynamic equilibrium in the separator.
- Pressure drops in pipelines, valves, and fittings are negligible
- Control valves are linear, with predefined valve characteristics and no hysteresis.
- Controllers operate under ideal conditions.

The processing system was initiated by defining the components, and their operating conditions such as temperatures, pressures and compositions. Pen-Robinson thermodynamic fluid package was selected for accurate prediction of the system behaviour to enable it to calculate thermodynamic properties such as enthalpy, entropy, phase equilibria, and vapour-liquid interactions due to changes in the input operating parameters. This fluid was selected due to its suitability

for most chemical compounds and a larger range of pressure and temperature (Mohamed Alshbuki & Mohamed Bey, 2024). Thereafter, a process flowsheet was constructed to represent the sequence and connectivity of operations visually. This includes the inputs, outputs, streams, and unit operations such as separators, valves and heat exchangers. The simulation was then executed to calculate material and energy balances across the system. At this stage, convergence is checked, which involves verifying that the simulation has reached a stable solution where all equations and constraints are satisfied. Once convergence is achieved, sensitivity analysis is conducted to study the effect of varying key parameters on the system's performance. A summary of the overall flow chart is shown in Figure 1.

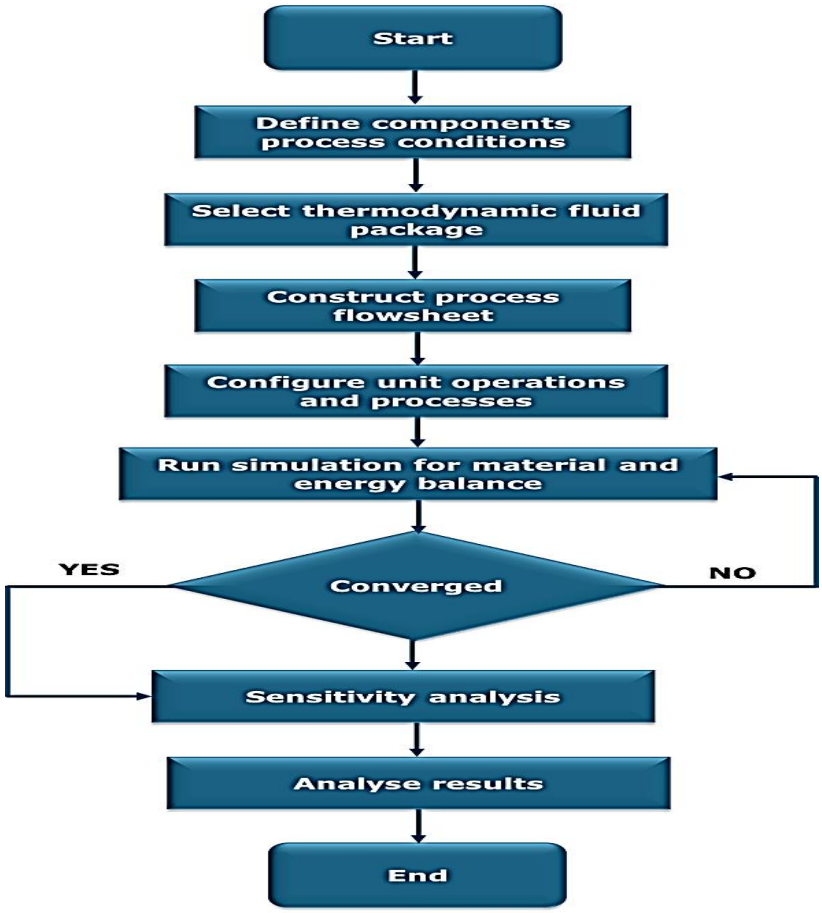

Figure 1: Flow chart for implementation of the program in Aspen Hysys Environment

The process flow diagram was designed to detail the specific unit operations and equipment used to model the system in both steady and dynamic states. The steady-state representation of the system (Figure 2) begins with a feed stream labelled "1", which represents the associated gas stream entering the process. The feed stream first passes through a control valve (VLV-100), whose primary function is to regulate the pressure and/or flow rate of the incoming stream. This operation ensures that the downstream equipment receives the feed at the desired pressure and flow conditions. After passing through the valve, the feed exits as stream "1a", which reflects modified operating conditions (such as pressure and temperature) compared to the input stream. Stream "1a" is then directed into a heat exchanger (E-100). The heat exchanger facilitates thermal energy exchange between the process stream and an auxiliary utility stream labelled "h1". The output from the heat exchanger is designated as stream "2", which carries the appropriately conditioned feed for the next stage of the process. Stream "2" serves as the input to the vertical separator (V-100), a critical piece of equipment designed to separate components based on their phase equilibrium. Inside the separator, the stream undergoes phase separation at the specified operating temperature and pressure conditions. The separator effectively divides the stream into two distinct products: the top outlet stream (3vap), which represents the lighter vapour phase and the bottom outlet stream (4liq), which contains the heavier liquid phase.

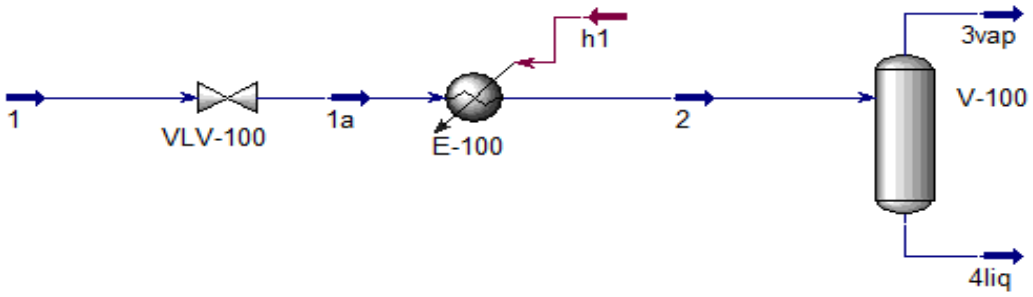

Figure 2: Steady-state process flow diagram in Aspen Hysys Environment

In the dynamic process flow diagram (Figure 3), controllers such as flow controller (FIC-100), composition controller (XIC-100), pressure controller (PIC-100) and level control (LIC-100) were incorporated into the steady process flow to enable real-time monitoring and adjustments to provide feedback signals to their respective control valves. The FIC-100 regulated the feed stream flow rate by comparing the actual flow to the set point and adjusting the position of the upstream control valve (VLV-100) accordingly. The XIC-100 monitored the temperature within the heat exchanger (E-100) and adjusted the heat transfer by controlling the auxiliary utility stream (h1). Similarly, the PIC-100 maintained the desired operating pressure within the vertical separator (V-100). It regulated the stream 3vap by sending feedback to the control valve (VLV-3vap), for pressure equilibrium and efficient phase separation. The LIC-100 managed the liquid level in the separator, ensuring that the heavier liquid phase (stream 4liq) was discharged appropriately through the bottom outlet. The controller sent feedback to the control valve (VLV-4liq) to prevent underfilling or overfilling, which could disrupt the separation process or cause operational inefficiencies.

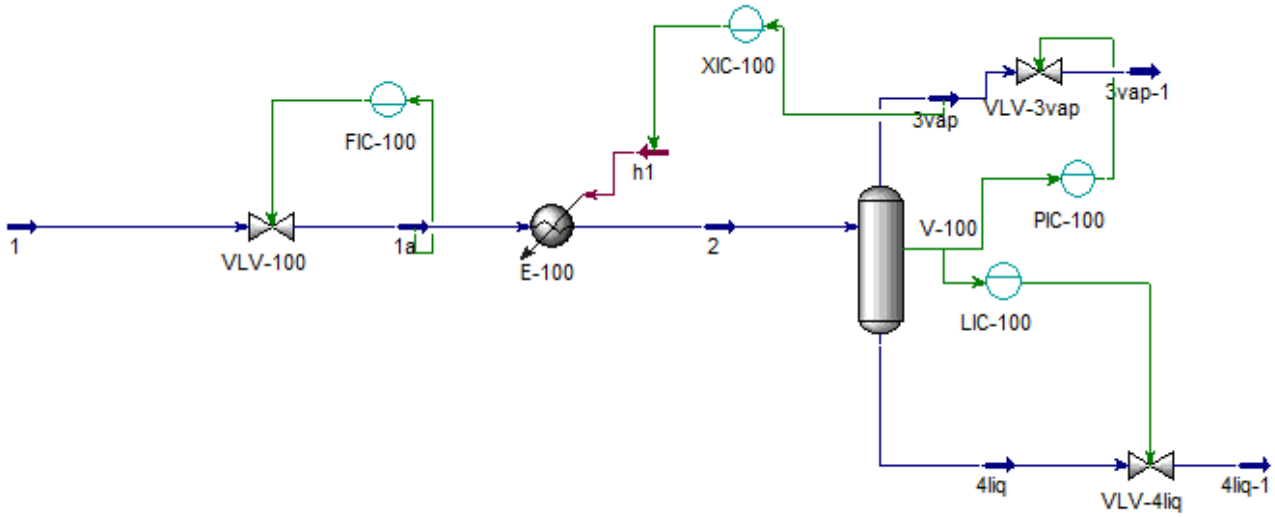

Figure 3: **Dynamic Process Flow Diagram in Aspen Hysys Environment**

3.0 Result and Discussion

The summary of the flowsheet with material and energy balance for the steady state base case is presented in Figure (4). The flowsheet showed vapor (750.3 kgmole/h), and liquid (249.7 kgmole/h) products stream derived from the 1000kgmole/h feed stream 1. The heat energy supplied by the utility stream (h1) across the heat exchanger (E-100) at a rate of 2.944×10^{6} kJ/h increased the feed stream temperature from 5.0°C to 25.0°C. The vapour stream (3vap) exits at

24.72°C and 4800 kPa, consisting primarily of lighter components, such as methane, with the highest mole fraction of 0.5997. Meanwhile, the liquid stream (4liq) leaves at the same temperature and pressure, comprising heavier components. The energy balance indicates that the heat supplied is adequate to elevate the temperature and achieve phase separation with minimal energy loss and optimal phase equilibrium, resulting in proper distribution between the vapour and liquid phases.

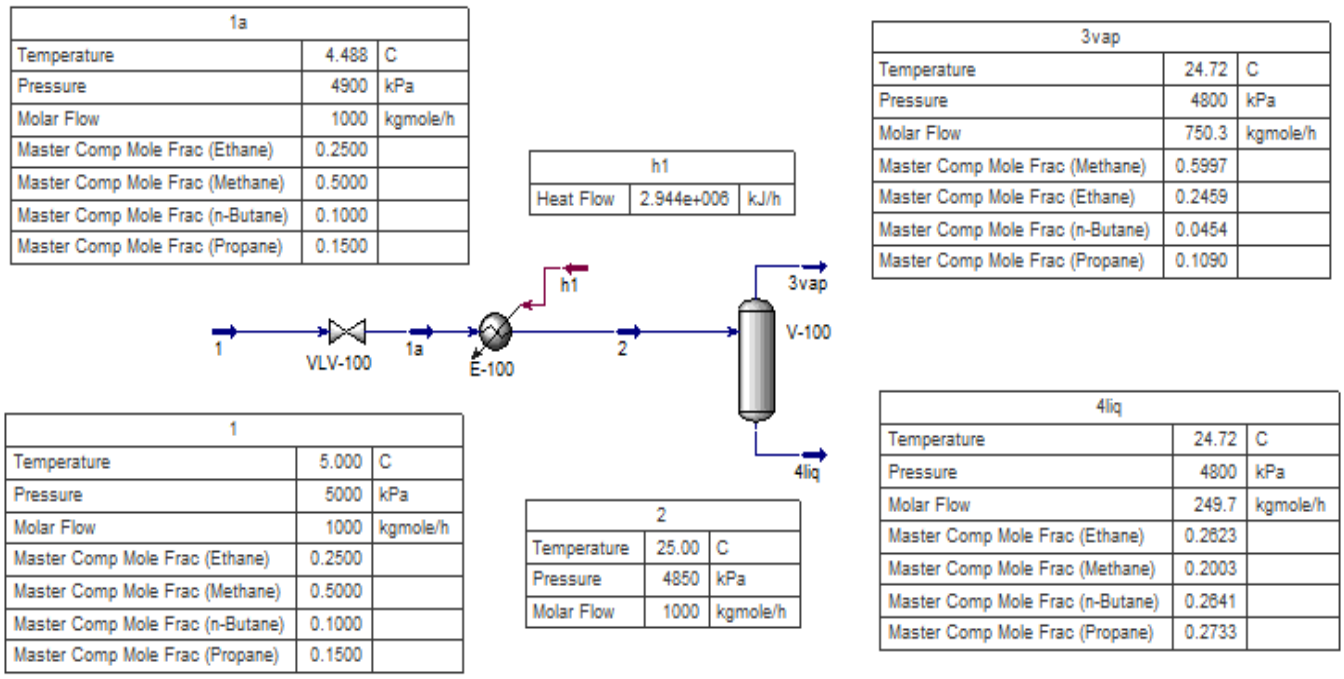

Figure 4: **Steady-state base case with material and energy balance streams**

The study conducted by Mohamed Alshbuki and Mohamed Bey (2024) investigated the performance of a flash separator for the separation of light hydrocarbons from natural gas using Aspen HYSYS. Their research reported a methane recovery of 10% in the vapour product stream under the specified operating conditions. In comparison, the results obtained from the base-case material balance in the present study demonstrated a methane recovery of 19.97% in the vapour phase while the n-butane fraction in the liquid product stream increased by nearly 2-fold. This represents a significant improvement over the literature value, indicating enhanced separation efficiency in the simulated process. The higher methane and n-butane recoveries in the top and bottom products, as observed in this study, suggest improved phase equilibrium modelling coupled with enhanced process configurations. These findings highlight the potential for further advancements in flash separation technology, particularly in optimizing the recovery of valuable light hydrocarbons from associated gas streams. Figure 5 illustrates the impact of pressure drop within the separation column on the molar flow rates of various hydrocarbon gas components in the liquid product stream. The results indicate that methane exhibits the highest sensitivity to increasing pressure drop, experiencing a sharp decline in its molar flow within the liquid phase. This drastic reduction suggests that methane is preferentially vaporized at lower pressures, aligning with findings by (Mokhatab *et al.*, 2018).

The authors reported that lighter hydrocarbons such as methane tend to exhibit higher volatility and phase out more rapidly under reduced pressure conditions. In contrast, ethane and propane displayed a more gradual decline in molar flow within the liquid product as pressure drop increased, indicating a relatively steady removal trend. This trend aligns with phase equilibrium studies by Mansoori (2009), which highlight the increasing retention of heavier hydrocarbons in the liquid phase under higher pressures. The consistent reduction in ethane and propane molar flow suggests that these components require moderate pressure drops to achieve effective separation. Interestingly, n-butane exhibits a non-linear relationship with pressure drop, showing an optimal pressure range between 3000 and 3500 kPa, where its molar flow in the liquid phase reaches a maximum before declining at higher pressure drops. Studies have shown that certain intermediate hydrocarbons exhibit complex phase behaviour, where increased pressure initially enhances condensation before leading to phase disruption at excessively high-pressure drops (Guo *et al.*, 2020). The observed non-linearity in n-butane separation behaviour suggests that process optimization within this pressure range can maximize liquid product yield while maintaining energy efficiency.

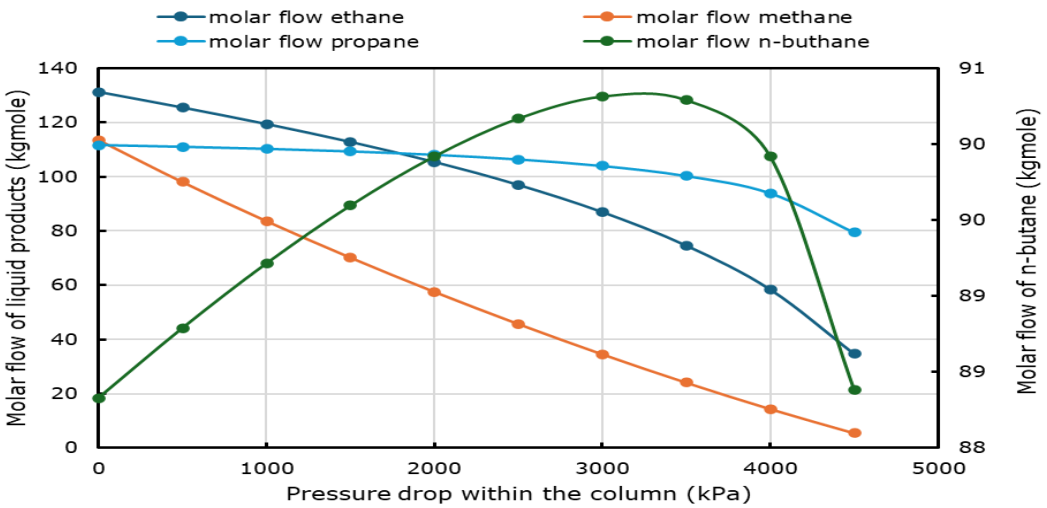

Figure 5: Sensitivity of liquid product composition to separator pressure drop

The effect of column temperature on the hydrocarbon-associated gas separation is presented in Figure 6. Accordingly, the molar flow of methane in the liquid phase decreases significantly as the column temperature rises. Methane is the most volatile of the components, and an increase in temperature promotes its transition to the vapour phase, reducing its presence in the liquid stream. This is in good agreement with the principles of phase equilibrium, where lower temperatures enhance condensation while higher temperatures favour vaporization(Smith *et al.*, 2018). Similarly, studies by Olugbenga *et al.* (2021) on validation of the molar flow rates of oil and gas in three-phase separators using Aspen Hysys observed that increasing the inlet stream temperature leads to a decrease in oil mass flow rate due to the evaporation of lighter hydrocarbons like methane into the gas phase. Ethane exhibits a similar trend to methane but at a less pronounced rate. Being slightly less volatile than methane, it remains in the liquid phase at lower temperatures but progressively vaporizes as temperature increases. According to Mokhatab *et al.* (2018), the volatility of ethane influences its separation efficiency, especially in fractionation and cryogenic processes. This is also true for propane as more light hydrocarbons vaporize into the gas phase with increasing temperature, leading to a reduction in the liquid molar flow rate in the liquid phase (Olugbenga *et al.*, 2021). The molar flow rate of n-butane in the liquid phase shows a non-linear relationship with temperature. Initially, as temperature increases, the molar flow rate of n-butane in the liquid phase increases, reaching an optimal point before declining at higher temperatures. This behaviour suggests that n-butane has an optimal temperature range for condensation; beyond this range, increased temperatures cause it to vaporize more readily. Higher temperatures support the destabilization of heavier hydrocarbons, leading to their increased vaporization into the gas phase (Noaman, 2024).

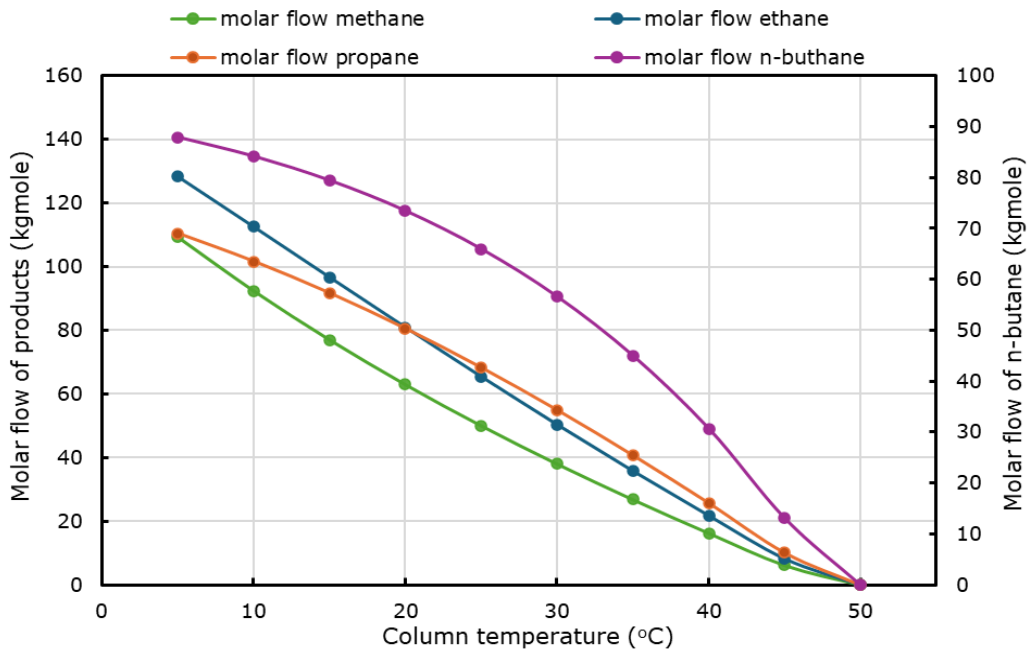

Figure 6: **Sensitivity of liquid product composition to separator temperature**

A comprehensive summary of key process variables such as flow rate, liquid level, pressure, and methane (CH_4) mole fraction, is presented in Table 1, providing critical insights into the operational dynamics of the separation process. In addition to these fundamental variables, the table also outlines the proportional-integral-derivative (PID) controllers actions and tuning parameters—proportional gain (Kc), integral time (Ti), and derivative time (Td).

Table 1: **Summary of dynamic simulation result**

Object **Process Variable (PV)**	**1a** **Flow rate (kgmole/h)**	**V100** **Liquid level (%)**	**V100** **pressure(bar)**	**V100** **CH_4 mol fraction**
Steady-state	1000	25	48	0.5997
PV maximum	1100	30	49	0.6500
PV minimum	900	20	47	0.5500
Controller	FIC	LIC	PIC	XIC
Action	Reverse	Direct	Direct	Direct
Tuning				
K_c	0.10	0.50	1.00	0.11
T_i	0.10	0.11	0.50	0.07
T_d	0.00	0.11	0.01	0.10

The steady-state flow rate is maintained at 1000 kgmole/h, with variations ranging from a maximum of 1100 kgmole/h to a minimum of 900 kgmole/h. Fluctuations in flow rate significantly impact residence time, separation efficiency, and energy consumption. At higher flow rates (PV max), increased turbulence within the vessel reduces separation efficiency due to insufficient residence time for phase separation. Conversely, lower flow rates (PV min) can lead to excessive liquid accumulation, increasing the risk of flooding within the vessel (Valdés *et al*., 2024). To regulate these variations, the flow controller (FIC) operates with a reverse action at a low proportional gain (Kc = 0.10) to facilitate smooth adjustments in flow rates, thereby preventing sudden fluctuations that could disrupt process stability (Figure 7).

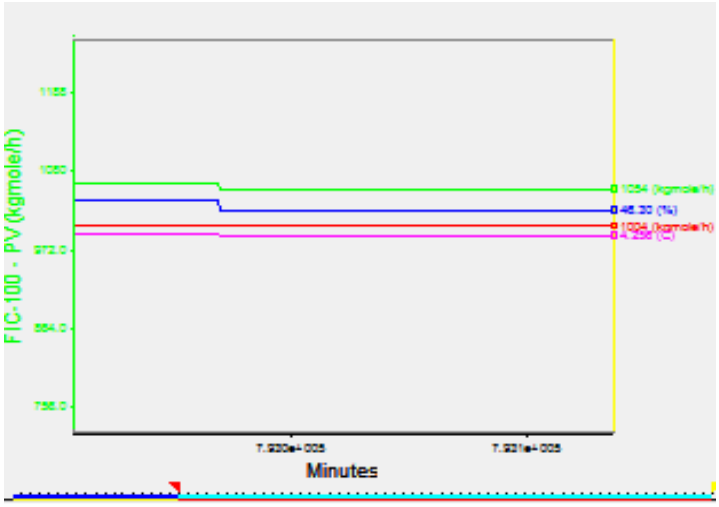

Figure 7: **Response of molar flow: The flow controller quickly overcomes the step change by closing the valve.**

The operating pressure of the system is maintained at 48 bar under steady-state conditions, with fluctuations ranging from a minimum of 47 bar to a maximum of 49 bar. Variations in pressure significantly influence phase equilibrium and component volatility, thereby affecting separation efficiency and product composition. The PIC operates with a direct-acting mechanism and highest proportional gain (Kc = 1.00) such that an increase in pressure prompts the controller to adjust control valves (Figure 8), thereby modulating gas outflow to maintain system stability and prevent process upsets (Saxena, 2023).

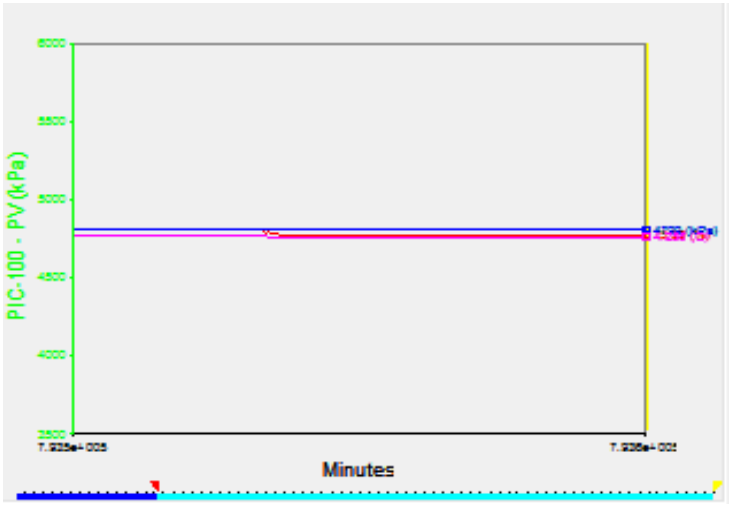

Figure 8: **Response of vessel pressure: The step change in molar flow shows no effect on Vessel pressure.**

The steady-state liquid level within the vessel is maintained at 25%, with fluctuations ranging from a minimum of 20% to a maximum of 30%. When the liquid level is too high, there is a risk of liquid carryover into the vapor phase, which can lead to contamination of the vapor stream. On the other hand, excessively low liquid levels can result in foaming or dry-out conditions, where gas entrainment into the liquid phase disrupts separation efficiency. To mitigate these fluctuations, the level controller (LIC) operates in direct action with a higher proportional gain (Kc = 0.50) and integral time (Ti = 0.11) to prevent large deviations in liquid level meaning that an increase in liquid level prompts the controller to increase the manipulated variable (Figure 9), thus adjusting liquid discharge to maintain stability. Effective level control ensures proper residence time for phase separation, optimizing process efficiency and minimizing energy consumption (Luyben, 2020).

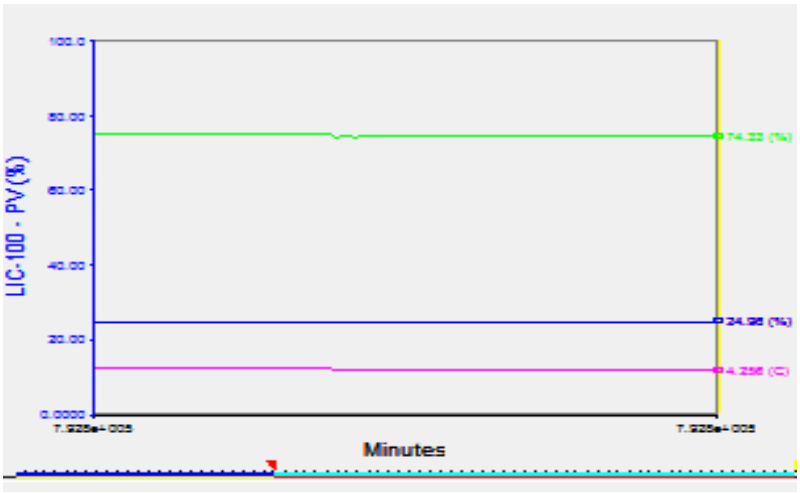

Figure 9:**Response of vessel liquid level: The vessel liquid level is less affected by the step change in molar flow**

The steady-state methane concentration in the vapor phase was found to be 0.5997, with fluctuations ranging from a minimum of 0.5500 to a maximum of 0.6500. The composition controller (XIC) operates in direct action at a low integral time (Ti = 0.07) to minimize deviations in methane concentration (Figure 10) while preventing overshooting and maintaining methane purity (Yoon *et al.*, 2020).

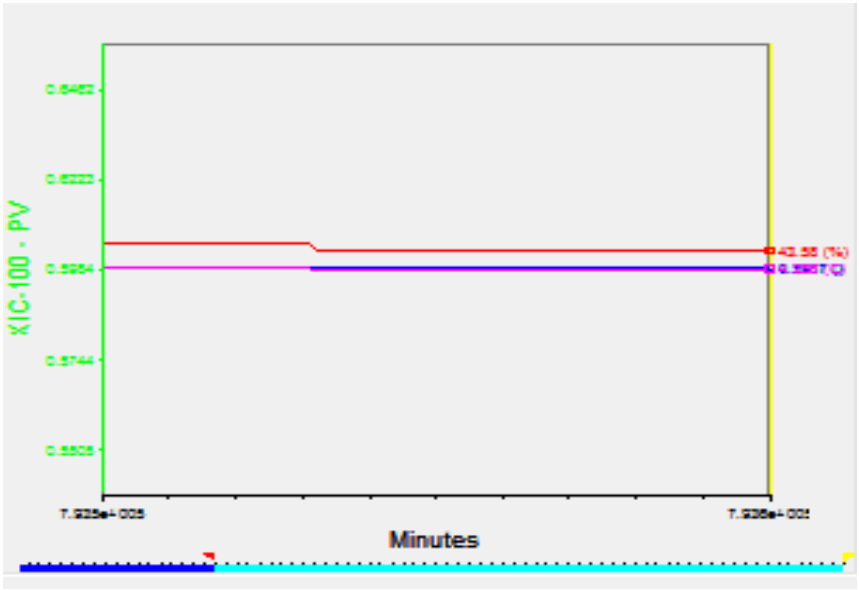

Figure 10: **Response of CH4 mole fraction: Methane mole fraction is less sensitive to the molar flow step change.**

A change in the liquid level set point from 20% to 30% significantly impacts the dynamics of gas-liquid separation within the vertical separation unit. The separation process in such vessels is governed by phase equilibrium, residence time, and hydrodynamic stability (Mokhatab et al., 2018). Increasing the liquid level reduces the available gas space, which influences both the vapor phase composition and the effectiveness of vapor-liquid disengagement. At higher liquid levels, the gas residence time decreases, which limits phase separation efficiency and increases the likelihood of liquid entrainment in the vapor phase (Smith et al., 2018). This occurs due to a phenomenon known as liquid carryover, where small liquid droplets are entrained into the gas stream, leading to contamination and inefficiencies in downstream gas processing units. The LIC operates with a direct-acting mechanism and proportional gain (Kc = 0.50) automatically responds to fluctuations in liquid level by adjusting the discharge valve to increase liquid outflow when a rise beyond the set point is detected (Figure 11). This ensures that excess liquid is removed, preventing overfilling and maintaining the desired separation conditions (Mohamed Alshbuki & Mohamed Bey, 2024).

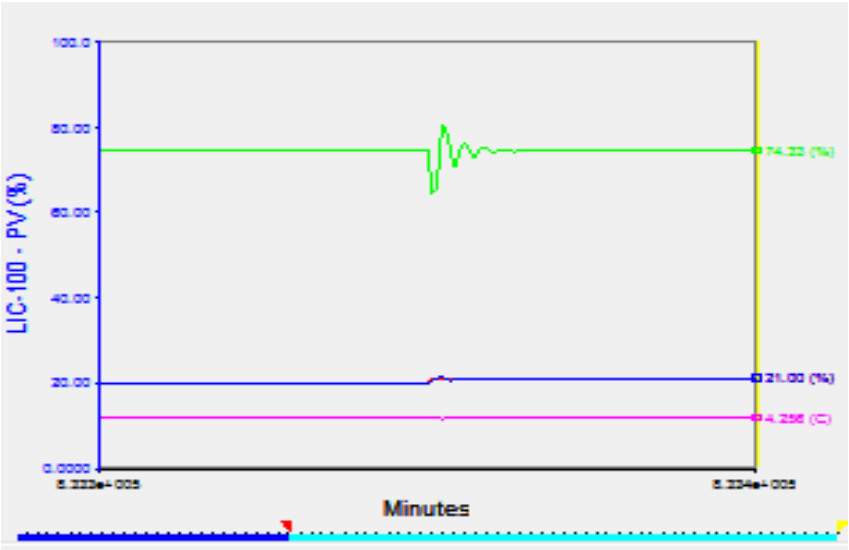

Figure 11: **Response in liquid level due to change in set point. A short instability in liquid level is observed with change in set point between 20-30%**

A change in the separator vessel pressure set point from 47 bar to 49 bar directly influences the vapor-liquid equilibrium (VLE), phase separation efficiency, and system stability within the separation unit. In response to this pressure variation, the PIC, operating in direct action mode, adjusts the control valve to regulated the vapor-phase outflow, ensuring that the pressure remains at the target set point (Figure 12). This control mechanism is crucial for maintaining steady-state operations and preventing fluctuations that could disrupt downstream processing units (Ahmed, 2016).

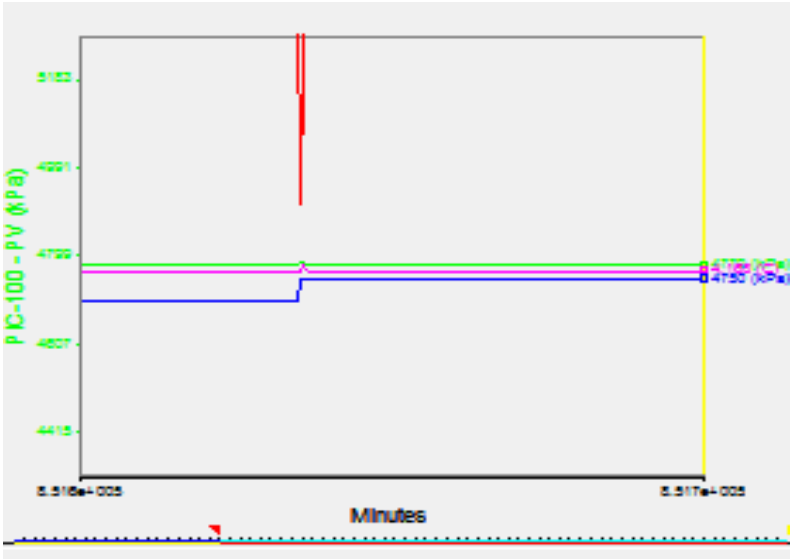

Figure 12: Response of step change in vessel pressure. Change is set point vessel pressure below steady state value makes the system adjust by fully opening of the valve.

A step change in the methane (CH_4) mole fraction in the vapor product from 0.55 to 0.65 significantly influences the separator's dynamic response and control system behavior. the XIC control system operating in the direct mode (Kc=0.11), reduced the vapor outlet valve opening to retain more methane within the system, allowing for equilibrium

adjustment and increased vapor-phase methane concentration (Figure 13). The proportional gain ensures that the XIC controller reacts effectively without overshooting, achieving rapid stabilization at the new set point (Valdés et al., 2024).

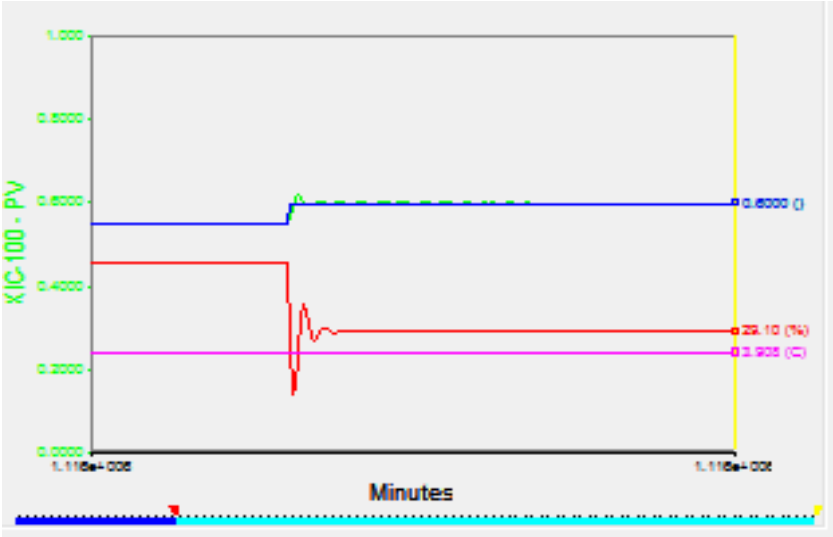

Figure 13: Response of step change in methane fraction: Increase in methane fraction set point produce quick recovery by reducing the valve opening.

4.0. Conclusion

This study demonstrates the effective separation of associated gas into valuable liquid and gas products using Aspen HYSYS software. The results clearly show that pressure drop significantly affects separation efficiency, highlighting the importance of optimizing operating conditions to achieve efficient separation. Furthermore, the system's ability to maintain stability and control under various dynamic conditions, including changes in flow rate, liquid level, and pressure, is an indication of the robustness of the separation process. The optimized PID controller settings play a crucial role in enabling rapid adjustments and strong responses to changes, thereby ensuring efficient separation and product quality. The findings provide critical insights into the steady-state and dynamic behaviours of associated gas separation systems. Furthermore, the simulation framework developed in this study can be easily extended to investigate more complex scenarios, such as the impact of nonlinearities, uncertainties, and disturbances on the system's behaviour. This can facilitate the development of more advanced control strategies and optimization techniques, ultimately leading to improved process performance and reduced operational costs.

Declarations

Credit authorship contribution statement

Ezeh, Isah and Yousif: Conceptualization. Writing, original draft, Methodology, Formal analysis, Data curation, Resources, and Project administration.

Declaration of competing interest

The authors declare no conflict of interest.

Acknowledgement

The authors wish to thank the management and technical staff of the Departments of Chemical Engineering Federal University Otuoke and Abubakar Tafawa Belewa University Bauchi, for granting the authors access to the laboratories and workshops.

References

Ahmed, T. 2016. Chapter 4 - PVT Properties of Crude Oils. in: *Equations of State and PVT Analysis (Second Edition)*, (Ed.) T. Ahmed, Gulf Professional Publishing. Boston, pp. 239-466.

Bellotti, D., Rivarolo, M., Magistri, L., Massardo, A. 2017. Feasibility study of methanol production plant from hydrogen and captured carbon dioxide. *Journal of CO2 utilization*, **21**, 132-138.

Ezeh, E., Mohammed, I.Y., Aworabhi, E. *et al.* Process Evaluation and Analysis of Variance of Rice Husk Gasification Using Aspen Plus and Design Expert Software. *Chemistry Africa* (2025). https://doi.org/10.1007/s42250-025-01189-0

Guo, P., Liu, H., Wang, C., Du, J., Fan, B., Jing, M., Wang, Z., Deng, Z., Zhan, S. 2020. The determination of phase behavior properties of high-temperature high-pressure and rich condensate gases. *Fuel*, **280**, 118568.

Luyben, W.L. 2020. Liquid level control: Simplicity and complexity. *Journal of Process Control*, **86**, 57-64.

Mansoori, G.A. 2009. A unified perspective on the phase behaviour of petroleum fluids. *International Journal of Oil, Gas and Coal Technology*, **2**(2), 141-167.

Mohamed A, E., Mohamed B, M. 2024. Simulation Process for Flash Separator of Light Hydrocarbons From Natural Gas by Aspen Hysys Program.

Mohammed, I.Y., Abakr, Y.A., Mshelia, H.G., Umar, S. 2021. Recovery of Ionic Liquid from Aqueous Phase Pyrolytic Oil: A Simulation Using ASPEN HYSYS V10. *African Journal of Engineering & Technology*, **1**(1).

Mbamalu, E.E., Mohammed, I.Y. 2024. Co-valorisation of cassava peel and rice husk to biofuel precursor via intermediate pyrolysis: Kinetics, thermodynamic and pyrolytic oil characterisation. *Waste Management Bulletin*. https://doi.org/10.1016/j.wmb.2024.11.004

Mbamalu, E.E., Mohammed, I.Y. & Abakr, Y.A. Parametric Study of Rice Husk Pyrolysis via Process Simulation and Statistical Analysis. *Mater Circ Econ* **7**, 1 (2025). https://doi.org/10.1007/s42824-024-00154-5

Mokhatab, S., Poe, W.A., Mak, J.Y. 2018. *Handbook of natural gas transmission and processing: principles and practices*. Gulf Professional Publishing.

Noaman, C.F. 2024. Design of oil and gas separation train by Aspen HYSYS in the Kurdistan Region of Iraq. In: *Department of Geology* Vol. Bachelor's degree in Petroleum, Palacký University Olomouc. Iraq pp. 36.

Olugbenga, A.G., Al-Mhanna, N.M., Yahya, M.D., Afolabi, E.A., Ola, M.K. 2021. Validation of the molar flow rates of oil and gas in three-phase separators using Aspen Hysys. *Processes*, **9**(2), 327.

Saxena, S. 2023. Integration of Advanced Process Engineering and Control in Petroleum Refining. *Journal of Advanced Research in Petroleum Technology and Management*, **9**(3&4), 14-19.

Sharma, A., Osorio Ojeda, L.C., Yuan, N., Burak, T., Gupta, I., Konate, N., Karami, H. 2024. Predicting Gas Separation Efficiency of a Downhole Separator Using Machine Learning. In: *Energies*, Vol. 17.

Smith, J., Van Ness, H., Abbott, M., Swihart, M. 2018. Introduction to Chemical Engineering Thermodynamics 8th Ed, McGraw Hill.

Valdés, R., Sotelo, C., Muñoz-Torres, F., Favela-Contreras, A., Cruz, E., Sotelo, D. 2024. Dynamic Simulation of an Oil and Gas Plant Using Aspen-HYSYS®: A Real Start-Up Process. *Arabian Journal for Science and Engineering*, 1-13.

Wang, Z., Li, S., Jin, Z., Li, Z., Liu, Q., Zhang, K. 2023. Oil and gas pathway to net-zero: Review and outlook. *Energy Strategy Reviews*, **45**, 101048.

Yoon, S., Oh, J.-S., Kim, J.-K. 2020. Dynamic simulation and control of Natural Gas Liquids recovery process. *Journal of Cleaner Production*, **257**, 120349.