JEAS

Journal of Engineering and Applied Sciences 7 (2011) 22-34

JOURNAL OF ENGINEERING
AND
APPLIED SCIENCES

Modeling and analysis of single phase transfer field motor

O.A. Ezechukwu, O. Kingsley

Department of Electrical Engineering, Nnamdi Azikiwe University, Awka

Abstract

The three phase transfer field reluctance machine was developed at the electrical machine laboratory of University of Nigeria Nsukka in the late 90's and since then no attempt had been made, so far, to develop the single phase counterpart. Thus the study, modelling and development of the single phase transfer field reluctance motor is the subject of this paper. To discuss this new machine, the mathematical model is first presented with the accompanying theoretical analysis and the practical approach. At appropriate intervals, comparison is made between the new machine and its induction counterpart. Also included in the text, is the calculations for both the forward and backward slips. From the characteristics and simulation results, it is found that the single phase reluctance transfer field motor is a low speed machine and can find its application in domestic areas, such as, blending, shaving and other areas that require low speed motor.

Keywords: Single phase transfer field reluctance motor; slip; speed; windings; induction machine

1. Introduction

Single phase transfer field reluctance motor comprises two identical machines that are integrally wound and mechanically coupled but with their pole axes 90^0 out of phase to each other. Each machine unit has two sets of windings that are identifiable as the main and auxiliary windings, respectively. The main windings of both machines are connected in series. The auxiliary windings are also connected in series but transposed and short circuited. No winding (conductor) is necessary in either of the rotors. Also included in the text, is the calculations for both the forward and backward slips. The transfer field reluctance machine, in general, is a low speed machine operating at half the synchronous speed of a normal induction motor(Agu, 1978). Hence the name 'half speed machine', and may find its applications in domestic appliances and other fields where low speed is required. The connection diagram is shown in fig 1.0. This machines has a peculiar advantage over the normal induction counterpart from the control point of view since the auxiliary winding terminals, which act as the rotor conductors in normal induction machine, is available without the need of slip rings or current collection gears and is also capable of survival in a harsh environment (Agu, 1978).

2. Rotor slip with respect to two rotating fields (forward/ backward rotating fields)

A single phase transfer field reluctance motor, just as its normal induction motor counterpart, requires a rotating field for starting purposes and is operated by an equivalent 2- phase supply by the use of two stator windings, in parallel, wound on the stator at 90° to each other and carrying currents that are also 90° out of phase (Agu and Anih, 1994). The 2-phase arrangement can be obtained in various ways: The reaction between the field created by the induced current in the auxiliary winding and that created by the current in the main winding, cause the rotor to move. The difference between the rotor speed (ω_r) and the synchronous speed ω is the slip, s, usually given as a percentage of the synchronous speed. The heavier the mechanical load on the motor the greater is the slip and the slower is the rotor speed (ω_r). So far, the action of single phase reluctance motor is similar to that of a normal induction motor counterpart but with synchronous speed being half that of the normal synchronous motor. That is ($^{\omega}/_{2}$).

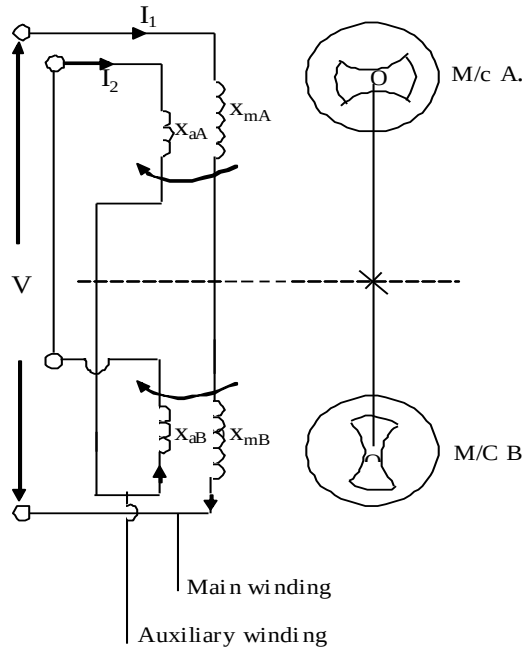

I_1 = Main winding Current of machine A and B
I_2 = Auxiliary winding current of machine A and B
x_{mA} = Main winding reactance of machine A
x_{mB} = Main winding reactance of machine B
x_{aA} = Auxiliary winding reactance of machine A
x_{aB} = Auxiliary winding reactance of machine B
V = Supply voltage.

Fig. 1. Connection diagram of a single-phase transfer field, half speed reluctance machine.

We have that, for the half speed machine, the slip with respect to the forward field is,

$$s_f = \frac{\omega - 2\omega_r}{\omega} \tag{1}$$

But the rotor direction of rotation is in opposition to that of the backward field; therefore, the slip with respect to the backward field is;

$$s_b = \frac{\omega - (-2\omega_r)}{\omega}$$

$$s_b = \frac{\omega + 2\omega_r}{\omega} \tag{2a}$$

From normal induction machine theory,

$$\omega_r = \omega(1 - s) \tag{2b}$$

Substituting [2b] into[1] and [2b],

$$s_f = \frac{\omega - 2\omega(1 - s)}{\omega}$$

$$s_f = 2s - 1 \tag{3}$$

And

$$s_b = \frac{\omega + 2\omega((1 - s))}{\omega}$$

$$= 1 + 2 - 2s$$

$$s_b = 3 - 2s \tag{4}$$

3. Equivalent circuit of a single phase transfer field reluctance motor

To develop the equivalent circuit of the motor, Fig. 1 can be redrawn for clarity and then analyzed as shown in fig.2.

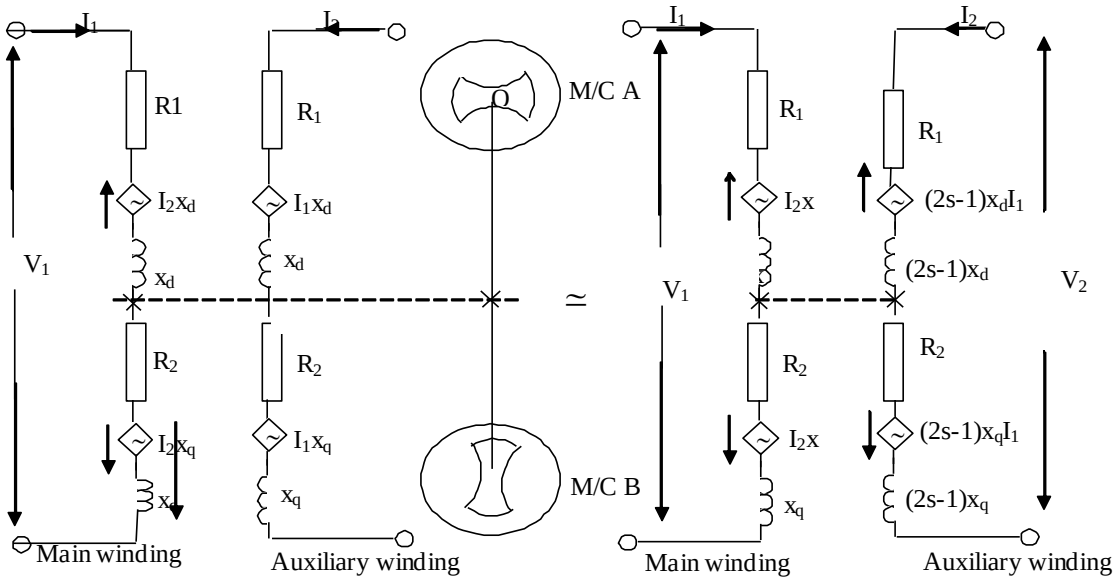

Fig 2a. Fig2b.

Fig. 2a and 2b. Modified circuit of single phase transfer field reluctance machine.

$$V_1 = I_1(R_1 + R_2) + I_2X_d - I_2X_q + I_1(X_d + X_q)$$
$$= I_1(R_1 + R_2) + I_2(X_d - X_q) + I_1(X_d + X_q) \quad (5)$$

Since windings are identical, $R_1 = R_2$

$$\therefore V_1 = 2I_1R_1 + I_1(X_d + X_q - X_d + X_q) + I_1(X_d - X_q) + I_2(X_d - X_q)$$
$$= I_1(2R_1 + 2X_q) + (X_d - X_q)(I_1 + I_2) \quad (6)$$

Similarly, from fig 2b;

$$V2 = I_2(R_1 + R_2) + X_dI_1(2s-1) - X_qI_1(2s-1) + X_dI_2(2s-1) + X_qI_2(2s-1)$$

Since windings are identical, $R_1 = R_2$

$$\therefore V_2 = 2I_2R_2 + I_2\{X_d(2s-1) + X_q(2s-1)\} + I_1\{X_d(2s-1) - X_q(2s-1)\} \quad (7)$$

So $$\frac{V_2}{2s-1} = \frac{2I_2R_2}{2s-1} + I_2\{X_d + X_q\} + I_1\{X_d - X_q\}$$

$$\frac{V_2}{2s-1} = I_2\left[\frac{2R_2 + 2X_q}{2s-1}\right] + (I_1 + I_2)(X_d - X_q) \quad (8)$$

Equations 6 and 8 result in an equivalent circuit shown below;

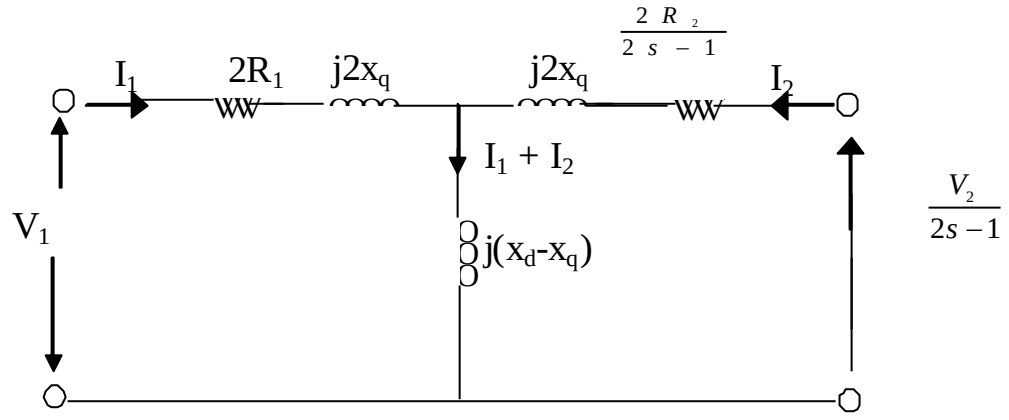

Fig. 3a.

Since the auxiliary winding is short circuited,

$$\frac{V_2}{2s-1} = 0$$

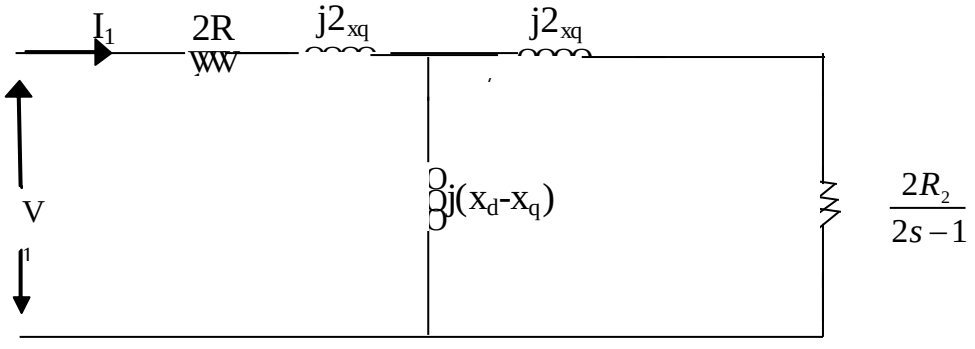

Fig. 3b.

If $2R_1 = r_m$

$2R_2 = r_a$

$x_m = 2x_q$

$x_a = 2x_q$

$x_{ma} = x_d - x_q$,

Then,fig3 (b) becomes

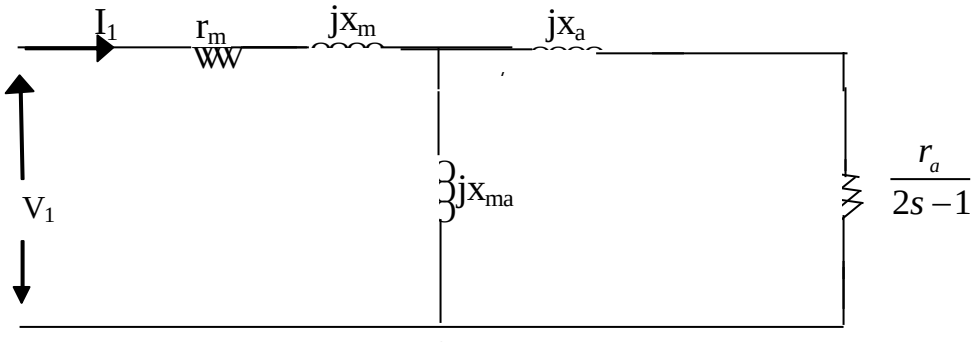

Fig. 3c.

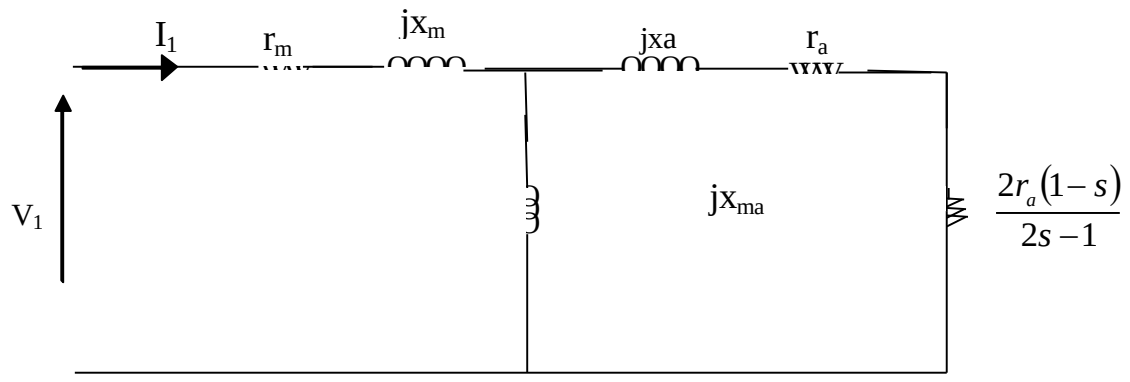

Fig. 3d.

Figs. 3 (a,b,c,d). Steady state equivalent circuits of 1-ϕ transfer field reluctance motor.

If the machine is rotating at slip, s, fig 3c,can be modified as shown below:

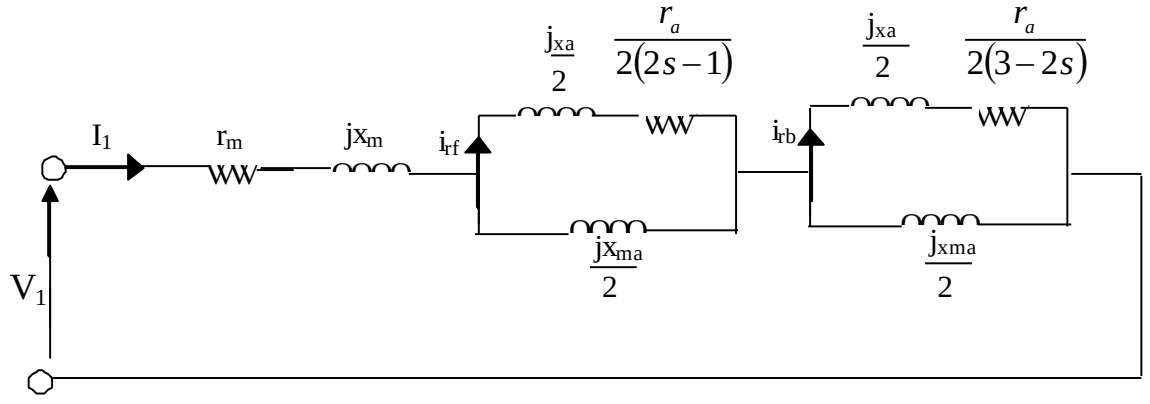

Fig.4(a)

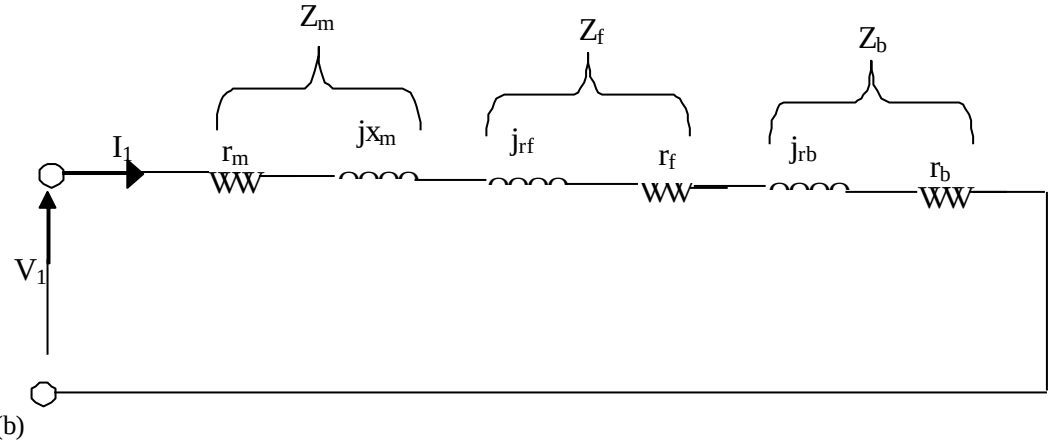

(b)

Fig. 4(a and b). Equivalent circuit of 1-ϕ transfer field motor rotating at slip s.

4. Power across air-gap, torque and power output in single phase transfer field motor

The performance index of single-phase transfer field reluctance motor can be obtained by the analysis of the circuit model of the motor given in fig. 4b.

From fig 4a, let;

$$\left.\begin{aligned} Z_m &= r_m + jx_m = \sqrt{r_m^{\,2} + x_m^{\,2}} \\ Z'_a &= \frac{r_a}{2(2s-1)} + j\frac{x_a}{2} = \sqrt{\left(\frac{r_a}{2(2s-1)}\right)^2 + \left(\frac{x_a}{2}\right)^2} \\ Z''_a &= \frac{r_a}{2(3-2s)} + j\frac{x_a}{2} = \sqrt{\left(\frac{r_a}{2(3-2s)}\right)^2 + \left(\frac{x_a}{2}\right)^2} \\ Z_{ma} &= 0 + j\frac{x_{ma}}{2} = \sqrt{0 + \left(\frac{x_{ma}}{2}\right)^2} = \frac{x_{ma}}{2} \end{aligned}\right\} \quad (9)$$

$\therefore$ From fig 4b

$$\left.\begin{aligned} Z_f &= \frac{Z'_a Z_{ma}}{Z'_a + Z_{ma}} \\ Z_b &= \frac{Z''_a Z_{ma}}{Z''_a + Z_{ma}} \\ \therefore Z_T &= Z_a + Z_f + Z_b \end{aligned}\right\} \quad (10)$$

Hence, $I_1 = \frac{V_1}{Z_T}$

More still,

$$\left.\begin{aligned} i_{rf} &= I_1 \frac{Z_{ma}}{Z'_a + Z_{ma}} \\ i_{rb} &= I_1 \frac{Z_{ma}}{Z''_a + Z_{ma}} \end{aligned}\right\} \quad (12)$$

The air-gap power for the forward field (p_{gf}) and backward field (p_{gb}) are given by

$$P_{gf} = i_{rf}^{\,2} \frac{r_a}{2(2s-1)} watts \quad (13)$$

$$P_{gf} = i_{rb}^{\,2} \frac{r_a}{2(3-2s)} watts \quad (14)$$

Mechanical power output for the forward field,

$$P_{mf} = 2(1-s)P_{gf} = i_{rf}^{\,2} \frac{r_a(1-s)}{(2s-1)} \quad (15)$$

Similarly,
Mechanical power output for the backward field,

$$P_{mb} = 2(s-1)P_{gb} = i_{rb}^{\,2} \frac{r_a(s-1)}{3-2s} \quad (16)$$

Mechanical net power output,

$$\therefore\ P_{mn} = P_{mf} - P_{mb} = 2(s-1)\left(P_{gf_{gb}} - P_{gb}\right) \tag{17}$$

The torque produced by the two fields can be expressed as;

$$T_f = \frac{1}{\omega} P_{gf} \tag{18}$$

$$T_b = \frac{1}{\omega} P_{gb} \tag{19}$$

Where ω = Synchronous Speed in rad/S.
If ω is neglected in eqn. 18 and 19. That is, at stand still, then the torques developed by the two field are termed T_{fs} and T_{bs} and are equal to;

$$T_{fs} = i_{rf}^{\ 2} \frac{r_a}{2s-1} \text{ Syn Watts} \tag{20}$$

$$T_{bs} = i_{rb}^{\ 2} \frac{r_a}{3-2s} \text{ Syn Watts} \tag{21}$$

Since the two fields are rotating in opposite direction, the torques produced by the two oppose each other. The resultant torque developed is therefore;

$$T_r = T_{fs} - T_{bs} \tag{22}$$

$$\therefore T_{r\,(synchronous)} = [P_{gf} - P_{gb}] \text{ syn. Watts} \tag{23}$$

The rotor copper losses are in general the product of the slip and the air gap power.
Thus;
Rotor copper loss corresponding to the forward field=(2s-I) P_{gf}.
Rotor copper loss corresponding to the backward field = (3-2s) P_{gb}.

5. The torque-slip characteristic of single phase transfer field reluctance motor

Under stationary rotor condition ie at $\omega_r = 0$, the two rotating field slip passed the rotor at the same slip, s =1, inducing equal current in the rotor. The two rotating fields have the same strength and produce equal and opposite torques resulting in the net starting torque of zero value. The single winding single-phase transfer field reluctant motor is thus non self starting. Further, the two rotating fields induce a resultant e.m.f in the stator which balances the applied voltage (assuming low leakage impedance of the stator winding). If however, the rotor is made to run at speed ω_r in the direction of the forward field, the two slips are now (2s-1) and (3-2s). For normal operation, (3-2s)> (2s-1) as a consequence the back field induced rotor current are much larger than at standstill and have a lower power factor.

The corresponding opposing rotor mmf, in the presence of the stator impedance, causes the backward field to be greatly reduced in strength (Agu and Anih, 1994; Wo/1997/0481721997). On the other hand, the low-slip, forward rotating field induces smaller currents of a higher power factor in the rotor than at standstill. This leads to great enhancement in the forward flux wave. This reduction in the backward field and strengthening of the forward field is slip-dependent and the difference increases as the slip (with respect to the forward field) reduces or the rotor speed (ω_r) in the forward direction becomes close to the synchronous speed. Infact, as near about the synchronous speed, the forward field may be several times the backward field. As a result there is a net running torque. The two fields together must always induce the stator winding e.m.f to balance the applied voltage.

The torque-slip curve is similar to that of an induction motor with synchronous speed halved ($\omega/_2$) . At $\omega_r = \omega/_2$, the torque is zero. If the values of the supply voltage, frequency, and other machine parameters are given as in table 1.0, equations 20, 21 and 23 can be used to compute the average slip values. As in the plot of fig 7, the result of weakening of one field and simultaneous strengthening of the other leads to a torque-slip characteristic like that of a 3-phase transfer field reluctance motor in the speed region close to synchronous (Gupta,2006). The fact of zero starting torque is immediately observed here. The forward field and the rotor's backward reaction field and also the backward field and the rotor's forward reaction field move in opposite direction with relative speed of 2ω, producing second harmonic pulsating torques with zero average value. As a consequence all single-phase motors are noisier than their 3-phase counterparts which have no such pulsating torque. The pulsating torque in fact is a direct consequence of the pulsating power in a single-phase circuit.

Table 1
Parameters for one machine unit

Parameter	Value
L_{md}	133.3mH
L_{mq}	25.6mH
$L_m = L_a$	25.6mH
$r_m = r_a$	3.0Ω
V	220V
F	$50H_Z$

If $L_m = L_a = 25.6mH$
$r_m = r_a = 3.0\Omega$
$L_{md} = 133.3mH$
$L_{mq} = 25.6mH$,

Then,
$L_{ma} = L_{md} - L_{mq} = 133.3mH - 25.6mH$
$= 107.7mH$
$= 107.7\times10^{-3}H$
Hence,
$x_m = \omega L_m = 2\pi f l_m$
$= 2\times3.142\times50\times25.6\times10^{-3}$
$= 8.044\Omega$
As $L_m = L_a$
$\therefore x_m = x_a = 8.044\Omega$

Similarly,
$x_{ma} = 2\pi f (L_{md} - L_{mq})$
$= 2\times3.142\times50\times107.7\times10^{-3}\Omega$
$= 33.839\Omega$

Putting the values into *fig 4a*, we have;

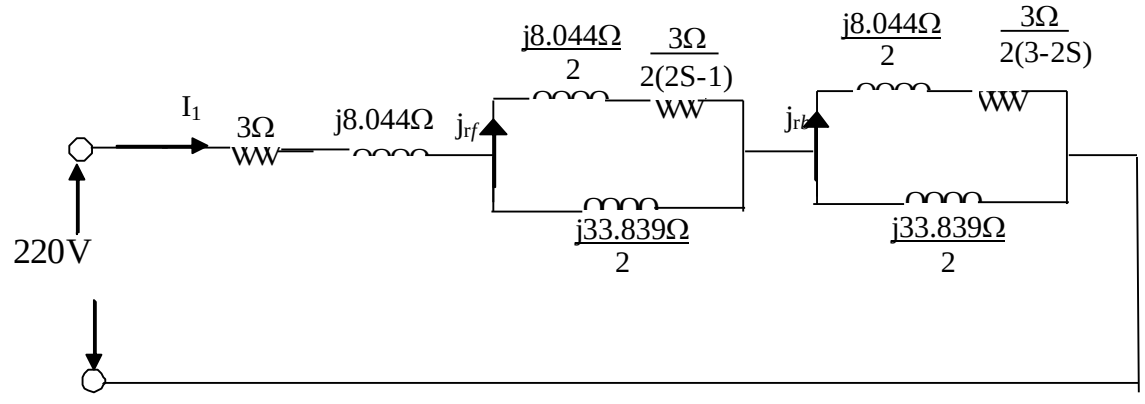

Fig. 5. Equivalent circuit of 1-ϕ transfer field reluctance motor with parameters.

Using the values obtained in fig 5., and applying them into equation [9], we have;

$$Z_m = \sqrt{3^2 + 8.044^2} \qquad = 8.585\Omega$$

$$Z'_a = \sqrt{\left(\frac{1.5}{2s-1}\right)^2 + 16.176}$$

$$Z''_a = \sqrt{\left(\frac{1.5}{3-2s}\right)^2 + 16.176} \quad \text{and}$$

$Z_{ma} = 16.920\Omega$.

The values of Z'_a and Z''_a vary with slip , hence as for the single phase transfer field reluctance machines with half speed characteristic, zero slips are attained for forward field slip (s_f) and backward field slip (s_b) of equations 3 and 4 at slip (s) = 0.5 and 1.5 respectively

and then a maximum (s_f=2, s_b=2) when the slip values are reversed.

∴ At s = 0.5

$$Z'_a = \sqrt{\left(\frac{1.5}{2(0.5)-1}\right)^2 + 16.176}$$

$$= \sqrt{\left(\frac{1.5}{0}\right)^2 + 16.176}$$

$$= \sqrt{\infty + 16.176}\ .$$

$$Z'_a = \infty\,\Omega$$

$$Z''_a = \sqrt{\left(\frac{1.5}{3-2(0.5)}\right)^2 + 16.176} = 4.091\Omega$$

From equation 10

$$Z_f = \frac{\infty \bullet 16.920}{\infty + 16.920}\,\Omega. \qquad Z_f = \infty\,\Omega$$

$$Z_b = \frac{4.091 \bullet 16.920}{4.091 + 16.920} = 3.294\Omega$$

∴ $Z_T = \infty\Omega + 3.294\Omega + 8.585\Omega = \infty\Omega$

Hence from equ. 11,

$$I_1 = \frac{220}{\infty} = 0A$$

From equ. 12,

$$I_{rf} = \frac{16.920}{\infty + 16.920} \times 0 = 0A.$$

$$I_{rb} = \frac{16.920}{4.091 + 16.920} \times 0 = 0A$$

Similarly, as s = 0.6,

$$Z'_a = \sqrt{\left(\frac{1.5}{2(0.6)-1}\right)^2 + (16.176)} = \sqrt{56.25 + 16.176} =$$

8.510Ω

$$Z''_a = \sqrt{\left(\frac{1.5}{3-2(0.6)}\right)^2 + (16{,}176)} = \sqrt{0.694 + 16.176}$$

= 4.10Ω

∴From equ.10,

$$Z_f = \frac{8.510 \bullet 16.920}{8.510 + 16.920} = 5.662\ \Omega$$

$$Z_b = \frac{4.107 \bullet 16.920}{4.107 + 16.920} = 3.305\ \Omega$$

$$\therefore \quad Z_T = 8.585 + 5.662 + 3.305 = 17.552\ \Omega$$

Hence, from equ.11,

$$I_1 = \frac{220}{17.552} = 12.534\,A$$

From eqn. 12,

$$I_{rf} = \frac{16.920}{8.510 + 16.920} \times 12.534 = 8.340\,A$$

$$I_{rb} = \frac{16.920}{4.107 + 16.920} \times 12.534 = 10.086\,A$$

The same procedure is followed until the parameters for slip (s) = 1.5 is obtained. Then a plot of T_f, T_b and T_n against slip, s (with range 0.5-1.5) is produced as shown in fig 7.

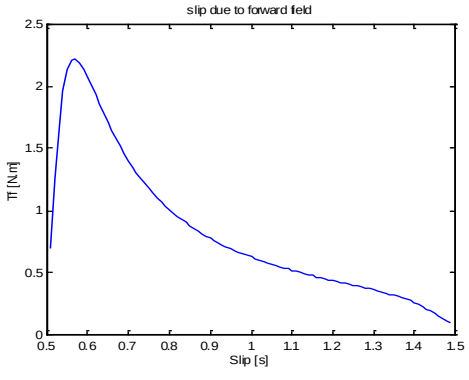

Fig. 7a. Torque /slip curve due to forward field.

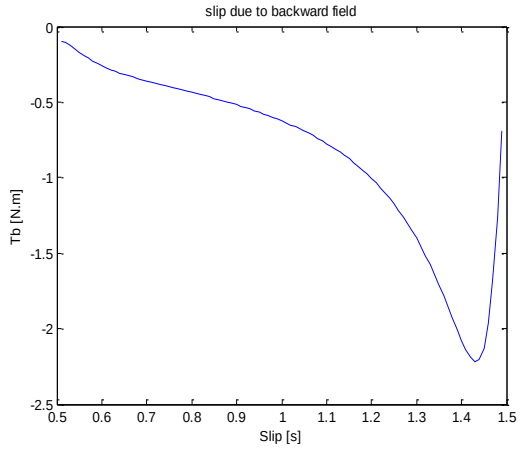

Fig. 7b.

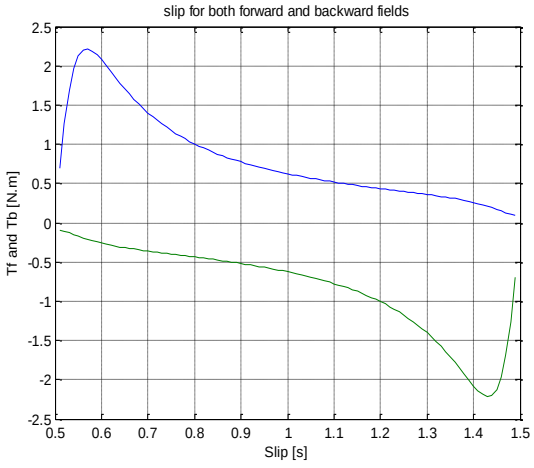

Fig. 7c.

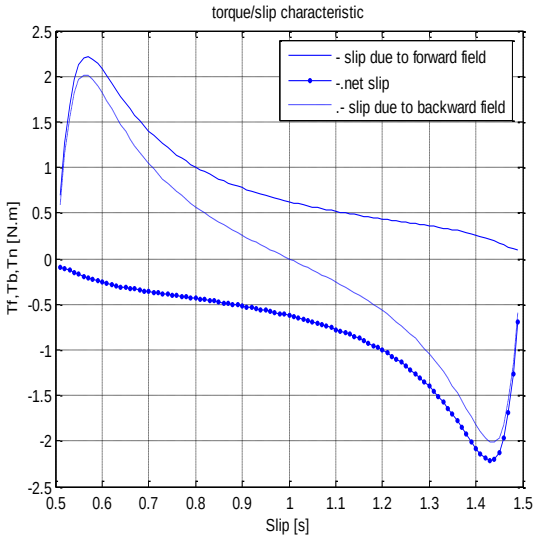

Fig. 7d. Torque /slip curve due to combined field.

Figure 7. Torque/slip curves for single phase transfer field reluctance motor:
(a) for forward field (b)for backward field (c)Net (forward and backward) fields and
(d) a, b and c combined

6. Starting of single phase transfer field reluctance motor

The problem in single-phase motor design is to get the rotor started (Wikipedia, 1985). As the single phase induction motor is not self starting and, therefore, it is necessary to employ some means for making it self starting. There are several ingenious methods for doing this. Commercial single phase induction motors employ the principle of 'phase split' described below, for the purpose of starting.

6.1. Principle of phase splitting

It is known that when two windings-spaced 90^0 apart on the stator of a motor, are excited by two alternating e.m.fs that are 90^0 displaced in time phase, a rotating magnetic field is produced (Chee-Mum Ong, 1988; Schenfer, 1926). If two windings so placed are connected in parallel to a single phase source, the field produced will alternate but will not revolve since the two windings are equivalent to one single phase winding. If, however, an impedance (resistance, inductance or capacitance) is connected in series with one of these windings, the currents may be made to differ in time phase (Jones and Prior, 1972). By proper selection of such an impedance the current may be made to differ by as much as 90^0, there by producing a rotating field very much like the field of a two phase motor. However, if the phase difference between the two currents is less than 90^0 and if the two mmfs are not equal, starting torque will be small (but in some applications it may be sufficient to start the motor) (Norsworthy,1958; Broadway and Tan, 1973). This is the principle of phase-splitting and the single phase induction motors employing this principle for starting are known as split phase motors (Agu, 1978). The single phase transfer field reluctance motor is of the split-phase type which can further be categorized under permanent capacitor or single-value capacitor motor as shown in fig 6

Where,
V = Applied voltage
$\boldsymbol{I}$ = Source Current
$\boldsymbol{I_m}$ = Main winding Current

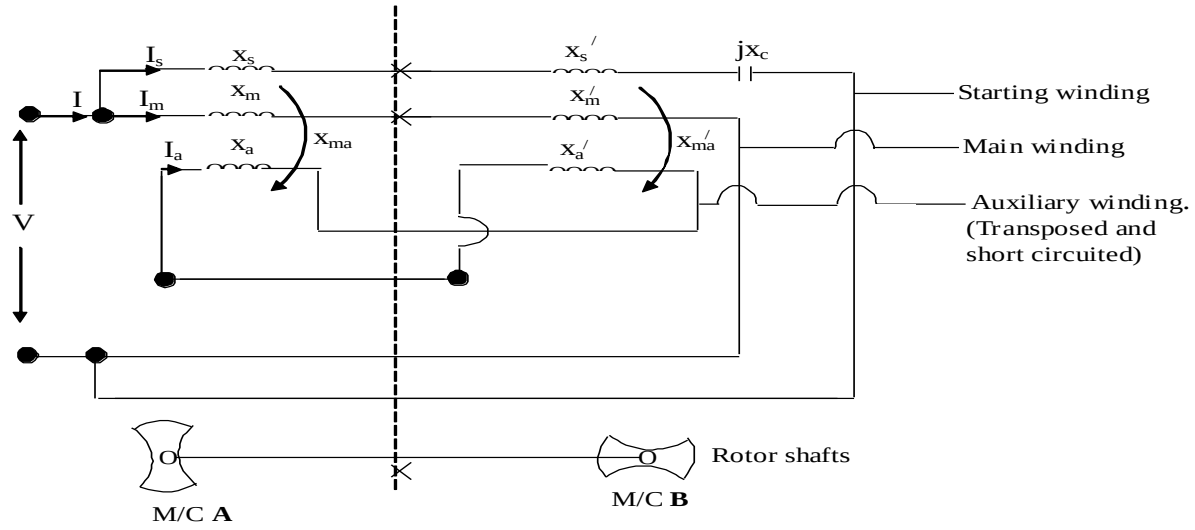

Fig. 6. The 1-ϕ transfer field reluctance machine with starting windings and capacitor.

I_s = Starting winding Current
I_a = Auxiliary winding Current
x_m = Main winding of Machine A
x_m = Main winding of Machine B
x_a = Auxiliary winding of Machine A
x_a' = Auxiliary winding of Machine B
x_S = Starting winding of machine A
x_S' = Starting winding of machine B
jx_C' = Capacitive reactive of the starting capacitor (c).

7. Constructional features

All single-phase asynchronous motors have one constructional feature in common, viz the starting winding. (x_s and x_s').The starting winding is provided so that, with the main or working winding (x_m and x_m'), the motor can assume a two-phase status to develop torque at start (Agu, 1978). In the case of the permanent capacitor motor, the starting winding remains in the circuit after starting, and thus closely approximates a two phase motor even when it is operating under load condition. Hence, the term 'split-phase' may rightly be applied to all single-phase asynchronous motors (Nasar and Unnewehr, 1983). Except for the single-value capacitor motor, all single phase asynchronous motors are provided with a cut-out for the starting winding.

The permanent capacitor single phase transfer field reluctance motor as seen in fig 6.0, has two stator windings placed mutually 90^0 electrical degrees apart. The main or running winding of the two machines (x_m/x_m') are connected directly across the single phase ac supply. The auxiliary windings (x_a and x_a'), though in stator, act as the rotor windings as in normal induction motor counterpart. A capacitor in series with the starting windings (x_s /x_s') is also connected across the supply lines. There is no centrifugal switch, since the starting windings are energized at all times when the motor is in operation. The starting windings in such motor usually have almost the same size of wire and almost as many turns as the main windings. The starting windings are always in the motor circuit, and therefore, the operation of the motor when loaded resembles more closely to that of a 2-phase motor.

Since in such motors the same capacitor is used for starting and running, neither optimum starting nor running performance can be obtained. The electrolytic capacitor cannot be employed owing to the requirement of continuous operation, and therefore, more expensive oil or pyranol insulated fid-paper capacitors are to be used.

8. Calculation for the value of the starting capacitor necessary to place the main and starting winding currents (i_m/i_s) in 90^0 phase shift

With reference to parameters of table 1, main winding impedance (for machine A/B) in fig6. is given as

$$Z_{m(AB)} = Z_m + Z_m' = 2Z_m(\text{since} X_m = X_m') = 2(r_m + jX_m) = 2(3 + j8.044) = 17.17\angle 69.55$$

Obviously, main winding current, I_m, lags behind the applied voltage V by 69.55^0.

Hence

$$I_m = \frac{V}{Z_{m(AB)}} = \frac{220}{17.17\angle 69.55^\circ} = 12.18\angle -69.55^\circ$$

For an efficient design, the starting windings usually have almost the same size of wire and almost as many turns as the main windings. We therefore have that the starting winding impedance (for machine A/B), in *fig6.* is

$$Z_{s(AB)} = Z_s + Z_s' = 2Z_s(\text{since} X_s = X_s')$$

$$\therefore Z_{s(AB)} = 2(R_s + jX_s)\Omega \quad (24)$$

Take R_a=2.5Ω and X_a=7.544Ω,
Then, eqn.24 becomes:

$$Z_{s(AB)} = 2(2.5 + j7.544) = 5 + j15.088\Omega$$

Since, phase angle between starting winding current I_s and main winding current I_m is 90^0 so starting winding current I_s must lead the applied voltage by (90^0-69.55^0) or 20.45^0.If x_c is the capacitive reactance of the capacitor connected in series with the starting winding.
The impedance of the starting winding for the two machines A/B, will therefore be given as

$$Z_{s(AB)} = (5 + j15.088 - jXc) = 5 + j(15.088 - Xc)\Omega$$

But for starting winding,

$$Tan\phi_{s(AB)} = \frac{15.088 - Xc}{5}$$

$$Xc = 15.088 - 5\tan\phi_{s(AB)} = 15.088 - 5\tan(-20.45^{\circ}) = 16.952\Omega$$

Capacitance, C, of capacitor =

$$\frac{1}{2\pi fXc} = \frac{1}{2\times\pi\times 50\times 16.952} F = 188\mu F$$

Therefore, from the above calculation, the value of the starting capacitor (C) necessary to place the main and starting winding currents (I_m / I_s) in quadrature is 188 μF.

$$Z_{s(AB)} = 5 + j(15.088 - 16.952) = (5 - j1.864)\Omega or 5.336\angle -20.45^{\circ}\Omega$$

$$I_{s)} = \frac{V}{Z_{s(AB)}} = \frac{220}{5.336\angle -20.45^{\circ}} = 41.229\angle 20.45^{\circ}\ A$$

9. Speed control of single phase transfer field reluctance motor

Due to the absence of starting switch, it is possible to run the motor over a wide range of speeds,. Such a motor can be arranged for as adjustable speed by the use of a tapped winding or an auto-transformer regulator (Hughes, 1970). As it is a well known fact that the torque developed in asynchronous motor is proportional to the square of the applied voltage, for a given load, therefore, if the applied voltage is reduced, the motor will operate with increased slip to develop the required torque. Thus the speed can be controlled by varying the voltage applied to the motor.

10. Suggested areas of application of single phase transfer field reluctance motor

The single-phase transfer field reluctance motor being a low speed machine will find application in domestic appliances requiring low speed drives such as perishable driving machine electric shaving machine (clippers) e.tc

11. Discussion of results and conclusions

Looking at the torque-slip curve of the machine, it will be observed that it is comparable with the induction motor counterpart, except that the synchronous speed of the new machine is half that of the synchronous motor. At this speed ($\omega_r = {}^{\omega}/_2$), the torque is zero, since the auxiliary winding current is zero. However, if the auxiliary winding is excited with direct current, the torque may be developed at this speed ($\omega_r = {}^{\omega}/_2$), and the machine will then operate in the synchronous mode.
The flux due to the circulating auxiliary winding current while aiding the main winding field flux in one machine, unit A ,say, will be opposing that of unit B. Thus, the flux of machine A will be strengthened while that of B is weakened. When the flux is maximum in machine A, it is minimum in machine B. This situation reverses in the next half cycle. Since the unit machine with greater flux; produces the greater torque (torque being directly proportional to the square of flux), the load torque will swing cyclically from one unit machine to the other, while the net torque remains constant.

The machine, like the single-phase induction motor counterpart, has been shown to be non-self starting and will require a starting winding which is 90^0 displaced from the main winding, in a manner akin to that of the single-phase induction motor. Even in the absence of rotor cage/winding, it has a lower pullout and starting torques than a conventional induction machine of comparable size. This is attributed to higher leakage reactance, which is the combination of the normal leakage/ quadrature axis reactance. This will inevitably reduce the current in the auxiliary winding, which is directly proportional to torque. A way of improving this torque may be to use conductors of smaller cross-section to make the auxiliary winding so that it can have a higher resistance. Alternatively, the auxiliary winding current can be boosted by reducing the high leakage reactance of the machine.

The torque-slip curve is similar to that of a conventional induction motor except that the synchronous speed is $\omega = 2\ \omega_r$. This is expected since the self-inductance of the overall machine set, like an induction motor, is independent of rotor angular position. However, unlike an induction motor, the torque mechanism is due to the reluctance forces while that of induction motor are due to alignment of fields. Experimental investigations show that the roles of the main windings and auxiliary windings can be interchanged with the same performance results.

References

Agu, L.A., 1978. The transfer field machine. Electric Machine and Electro Mechanics, pp 403-418.

Agu, L.A., Anih, L.U., 1994. Coupled polyphase reluctance machine without rotating windings. IEE Trans. Power Apparatus and System, 93(6), 1776-1786.

Brodway- ARW, Tan, SCF., 1973. Brushless, stator-controlled synchronous induction machine. Proc IEE, 120, 860-866.

Chee-Mum Ong., 1988. Dynamic Simulation of Electric Machinery. Prentice Hall RTK. Upper Saddle River, New Jarsey. pp 167-192, 214.

Gupta, J. B., 2006. Theory and Performance of Electrical Machine. S.K Kataria and Sons 4424/6 Guru Nanak Market, Naisarak Delhi-110006.pp. 578-579

Hughes, E., 1970. Electrical Technology. Longmans Group LTD, London, pp 486-492.

Jones CY, Prior, D.L., 1972. Unification of field and circuit theories of electrical machines.Proc. of IEE, 119, 871-872.

Nasar, S.A., Unnewehr, L.E., 1983. Electromechanics and Electric Machines. John Wiley and sons Inc., New-York, 246-264.

Norsworthy, K.H., 1958. A Stator- fed Half – speed Synchronous Motor. PhD thesis, University of Bristol.

Schenfer, C., 1926. Synchronous – induction motor with excitation on the stator side. Electrotech and Maschinerebau, 44,345-348.

Wikipedia.1985. Induction motor the free encyclopedia pp. 1-7.

Wo/1997/0481721997. Reluctance machine with permanent magnet rotor excitations. 12. 18p12.

APPENDIX

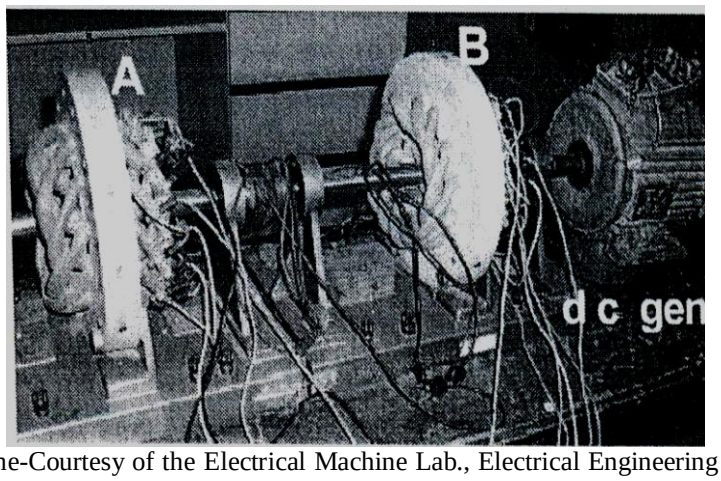

The experimental machine-Courtesy of the Electrical Machine Lab., Electrical Engineering Department, University of Nigeria Nsukka- Nigeria..