JEAS

Journal of Engineering and Applied Sciences 4 (2008) 126 - 133

JOURNAL OF ENGINEERING AND

Models for transient stability study of inter connected power system

A. E. Anazia and J.C. Onuegbu

Department of Electrical Engineering, Nnamdi Azikiwe University, Awka.

Abstract

Analysis of power system transient stability requires proper and careful selection and representation of system models since accuracy of result largely depends on these models. Power system components are non-linear, analysis of the system therefore is based both on differential and algebraic equations.

1. Introduction

Analysis of transient stability of power systems involves the computation of their non-linear dynamic response to large disturbance, usually a transmission network fault, followed by isolation of the faulted elements by protective relaying. The overall power systems representation include models for the individual components that make up the entire system. The model used for each component should be appropriate in other to arrive at logical result hence the system equations must be organised in a form suitable for analysis using numerical methods.

The complete system model consists of a large set of ordinary differential equations and large sparse algebraic equations. The transient stability analysis is thus a differential algebraic initial – valued problem.

- Models of interest in transient stability studies are classified thus:

Synchronous generators and the associated excitation systems and prime movers.

- Interconnecting transmission network including static loads.
- Induction and synchronous motor loads.

Generator model

The classical model is a simplified model of a synchronous generator used for transient studies. The generator is represented by a constant Internal voltage E' behind a transient reactance X'_d the model is based on the following assumption:

- Machine is operating under balanced three phase positive sequence condition.
- Machine excitation is constant.
- Machine losses, saturation, and saliency are neglected.

Classical Model reduces the complexity associated with detailed sub transient studies while maintaining reasonable accuracy in stability calculations.

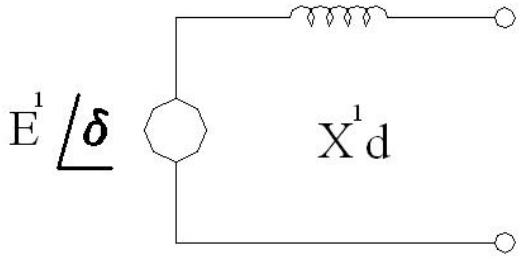

Fig. 1. Circuit diagram for classical model.

When transient stability study involving a large power system with many generating units is performed, computation can be reduced by combining the swing equations of those units that swing together. Such units, which are called **"COHERENT"** machines, usually are connected to the same bus or are electrically closed, and they are usually remote from the network disturbance under study. For a classical model representation of a constant internal voltage $E^{'}$ behind a transient reactance $X^{'}_d$, the machine equation is

$$\delta p = \omega \qquad \ldots\ldots (1)$$

$$\omega P = \frac{1}{\mathrm{m}}(P_m - P_e) \ldots\ldots\ldots (2)$$

where *m* stands for p.u., inertia

$$m = \frac{H}{2\pi f}$$

and *H* is the inertia constant.

For detailed studies, the sub-transient model is used. Here, the sub-transient reactance X'_q and X'_d and the various time constants of the Governor, Automatic Voltage Regulator (AVR), Power System Stabilizers (PSS) and excitation are incorporated in the study.
The machine equations are:

$$P_1 = mp^2\delta + Kdp\delta + Pe + \Delta P \quad (3)$$

$$V_d = X_q I_q \quad (4)$$

$$V_q = \frac{V_r}{1+T_d P} - \frac{(X_d + T_d X'_d P)}{(1+T_d P)} \cdot I_d \quad (5)$$

$$P_d = V_d I_d + V_d I_d \quad (6)$$

where P = d/dt an operator

Load model

The modelling of loads in stability study is a complex problem due to the unclear nature of aggregated loads. However, loads are typically classified into two broad categories: static and dynamic. Dynamic load models are more complicated, and are used mainly for transient stability analysis, while static models are used to perform power flow and small-disturbance stability analysis. The three main static load models are known as constant PQ, constant current and constant impedance.
These models can be expressed mathematically as

$$P = P_o\left[\frac{V}{V_o}\right]^a \quad (7)$$

$$Q = Q_o\left[\frac{V}{V_o}\right]^b \quad (8)$$

Where P_o and Q_o are the active and reactive power consumed at voltage V_o respectively. The type of load model largely depends on the exponents a and b,
i.e. Constant PQ for a = b= o
Constant current for a = b = 1, and
Constant impedance for a = b = 2
However, some loads, consist of a large quantity of diverse equipment of varying levels and composition and some equivalent models are necessary.
The importance of accurate load models has been demonstrated [3, 4] when considering voltage sensitive loads and characteristics of load parameters for various homogenous loads.
These characteristics may be combined to give the overall load characteristics at a busbar. For example, a group of n homogenous loads, each with a characteristic of PV_j and a nominal power P_j may be combined to give overall characteristics.

$$PV_{(overall)} = \frac{\sum_{j=1}^{n}\left(PV_j P_j\right)}{\sum_{j=1}^{n}\left(P_j\right)} \quad (9)$$

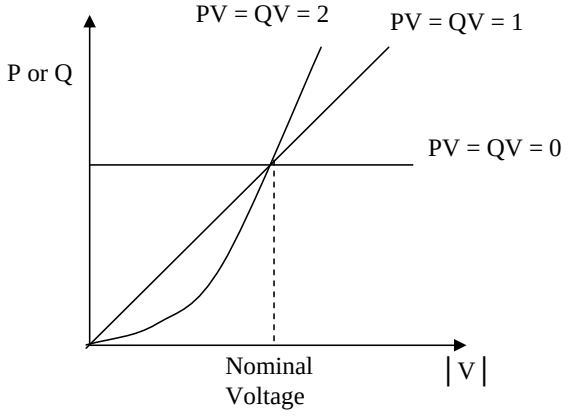

(a) Active and reactive power against voltage,

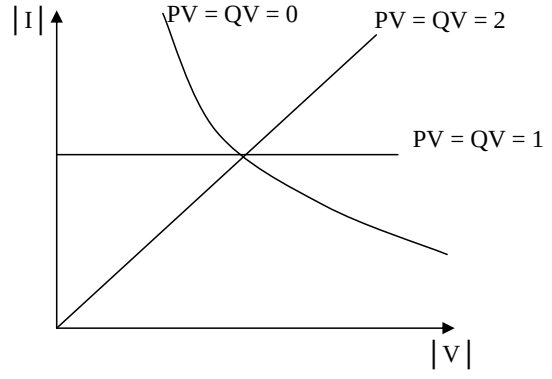

(b) Current against voltage

Fig. 2: Characteristic of different load models. (a) Active and reactive power against voltage, (b) Current against voltage.

Automatic voltage regulator model (AVR)

A model for AVR is considered in which the continuous automatic regulation of the synchronous machine is achieved by a control system with reference to a fixed voltage V_r. The following assumptions are made.

- Time delays in the error signal amplifier and control exciter are neglected.
- No limitations are placed on the output signals from any element of the control system.

The equations are thus:

$$V_f = \frac{\mu}{1+TsP} - (V_r - V_t - V_s) \tag{10}$$

$$V_S = \frac{\mu P}{1+T_s P} V_f \tag{11}$$

where T_e and T_s are time constant of main exciter and derivative stabilising loop respectively.

Governor

The power admitted to the turbine, through the stop valve and pilot valve, is controlled in accordance with the speed of the shaft.

The following assumptions apply:

- The delays in the prime mover and valves are represented by single order exponential time constants.
- The power input to the governor is considered to be constant and prime mover losses are neglected.
- Delays in centrifugal governor and relay mechanism are neglected.

$$\Delta_P = \frac{\langle K_g | W_o \rangle}{(1+T_g P)(1+T_h P)} PS \tag{12}$$

Induction machine model

Unlike the synchronous machine model, the induction machine model is quite simple since the effect of saliency and saturation are absent. They may therefore, be considered as injected currents in parallel with fixed admittance. At any instant during transient stability study the rotor impedance may be assumed to be the steady-state value. $I_1 = \bar{Y}[V - E'']$

$$\begin{bmatrix} I_{Ir} \\ I_{Ir} \end{bmatrix} = \frac{1}{(R_1^2 + X''^2)} \begin{bmatrix} R_1 & X \\ -X'' & R_1 \end{bmatrix} \begin{bmatrix} V_r - E_r'' \\ V_m - E_m'' \end{bmatrix} \tag{13}$$

where the subscripts ‘r’ and ‘m’ represent rotor and stator respectively, R and X'' are resistance and transient reactance respectively. The injected current into the network which includes the admittance $\bar{Y}$ is thus:

.

$$\begin{bmatrix} I_{injr} \\ I_{inm} \end{bmatrix} = \frac{-1}{(R_1^2 + X''^2)} \begin{bmatrix} R_1 & X'' \\ -X'' & R_1 \end{bmatrix} \begin{bmatrix} E_r'' \\ E_m'' \end{bmatrix} \tag{14}$$

The minus sign confirms the induction machine as being assured to be motoring.

Static var compensation systems model

The use of static VAR compensation systems (SVS) to maintain an even voltage profile at load centres remote from generation has become common. An SVS can have a large VAR rating and therefore to consider it as a fixed shunt element can produce erroneous results in a transient stability study. Also an SVS may be installed to improve stability in which case good modelling is essential for both planning and operation.

The model presented here is based on representations developed by CIGRE working group (1).

The differential equations describing the action of the control circuit fig (3) are:

$$PB_1 = [K(1+T_2P)(V_{svset} - V'_{sv}) - B_1] / T_1 \tag{15}$$

$$PB_2 = [(1 + T_4P) B1 - B_2] / T_3] \tag{16}$$

$$PB_3 = [B_2 - B_3] / T_5 \tag{17}$$

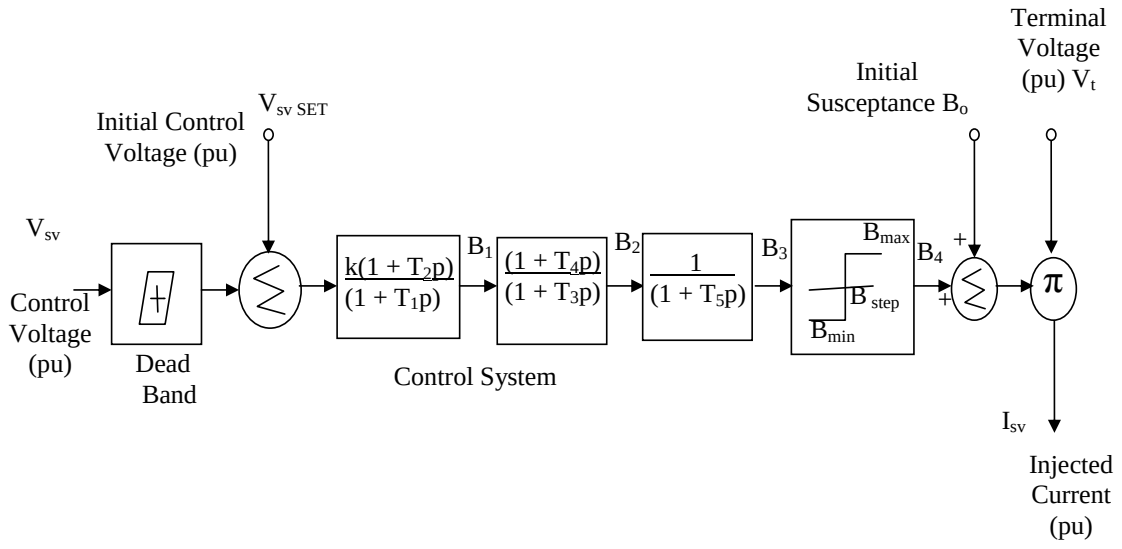

Fig. 3: Composite Static VAR Compensation System SVS model

TRANSFORMER MODEL

The transformer is similarly represented by a two-port network.

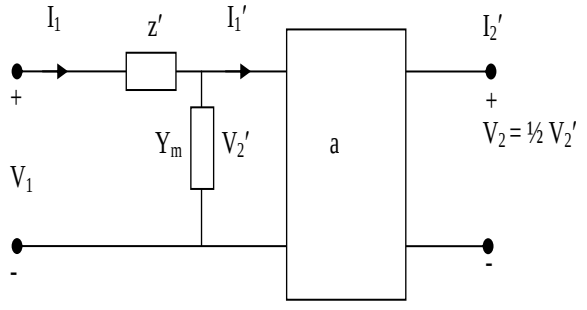

Fig. 4: Transformer Model π Network

In the transformer model shown, the impedance Z_1 represents transformer resistance and leakage inductance and is typically small. The admittance Y_m represents the magnetizing inductance and the core losses, and it is also small and usually negligible (γ_m = 0). The transformer voltage ratio 'a' is typically 1 p.u. unless the transformer taps are off the nominal values (usually in load tap changers or LTCs).

The model thus reduces to π equivalent model below

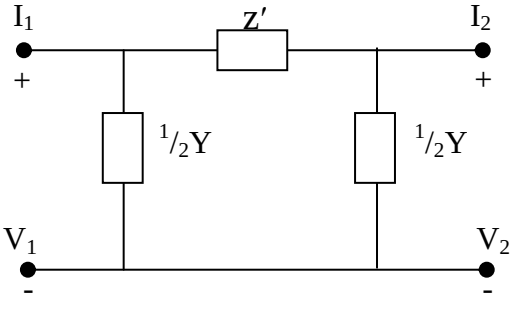

Fig. 5: Equivalent π Circuit of Transformer

$$\left.\begin{aligned} Z &= Z_1/a \\ Y_1 &= (1 - a)1/Z_1 \\ Y_2 &= (a^2 Z_1 Y_m + a^2 - a)\ 1/Z_1 \end{aligned}\right\} \quad (18)$$

The above transformer π equivalent model holds except for phase-shifter transformers

Network and compensational circuits

These circuits which have both real and imaginary components are represented by complex two –port ABCD matrix parameters

$$\begin{bmatrix} V_d + jV_q \\ I_d + jI_q \end{bmatrix} = \begin{bmatrix} \bar{A} & \bar{B} \\ \bar{C} & \bar{D} \end{bmatrix} \begin{bmatrix} V_b & \exp(\pi/2 - \delta) \\ \bar{I}_b & O \end{bmatrix} \quad (19)$$

This representation is used for multi-machine stability since the inclusion of time varying parameters would cause enormous computational problems. Moreover, frequency, which is the most obvious variable in the network, usually varies by only a small amount and thus, the errors involved are small. Also, the rate of change of network variables is assumed to be infinite which avoids the introduction of differential equations into the network solution.

Any load represented by constant impedance may be directly included in the network admittance matrix with the injected currents due to these loads set to zero. Their effect is thus accounted for directly by the network solution.

Turbine model

Modelling of turbine for stability studies remain imperative if accuracy of results is to be maintained for the following reasons if:

- A longer-term transient stability study or a dynamic stability study is to be made.
- The turbine is a two–shaft cross-compound machine which has a separate generator on each shaft.
- Generator over-speed is such that an interceptor valve may operate during the study.

A generalised model to accommodate the different types of compound turbines has been developed by the IEEEs [2].

Power system stabilizer (pss) model

A PSS model is considered as additional control mechanism to enhance system stability. The basic function is to add damping to the generator oscillation by controlling its excitation using auxiliary, stabilizing signals. To provide the required damping, PSS must produce:

- A component of electrical torque in phase with the rotor deviation.
- A logical signal for controlling generator excitation speed deviation Δw
- The PSS transfer function is Gpss (s) used to compensate the phase lag between the exciter input and the electrical torque.

A PSS contains three blocks as shown in Fig. 6.

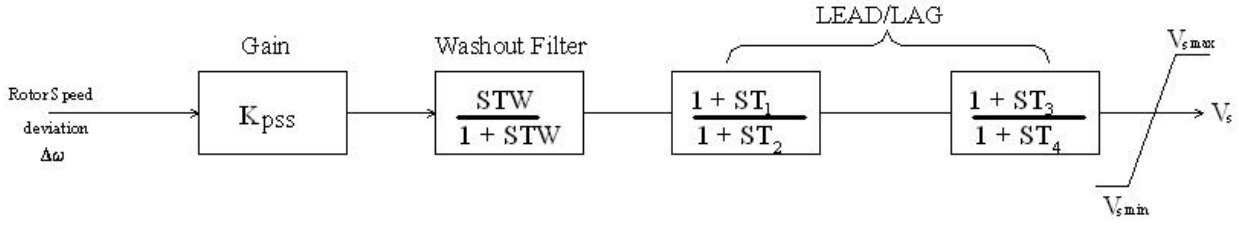

Fig. 6: Transfer functions of the PSS model, where Kpss is a constant gain, and all Ts are time constants.

The first block is the stabilizer gain block with the constant gain Kpss, which determines the amount of damping. The second block is the washout filter, which serves as a high-pass filter, with a time constant that allows the signals associated with oscillations in rotor speed to pass unchanged, and does not allow the steady state changes to modify the terminal voltages. The last block, the phase-compensation, provides the desired phase-lead characteristic to compensate for the phase lag between the AVR input and the generator electrical (air-gap) torque.

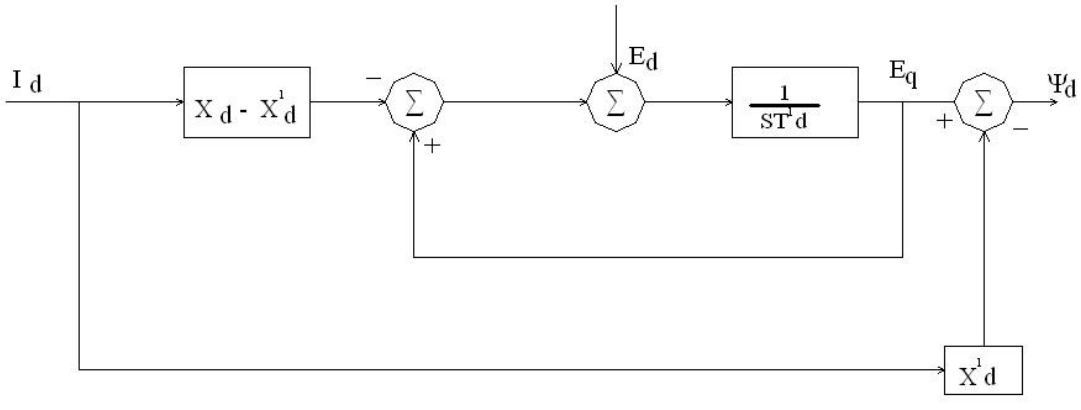

(a)

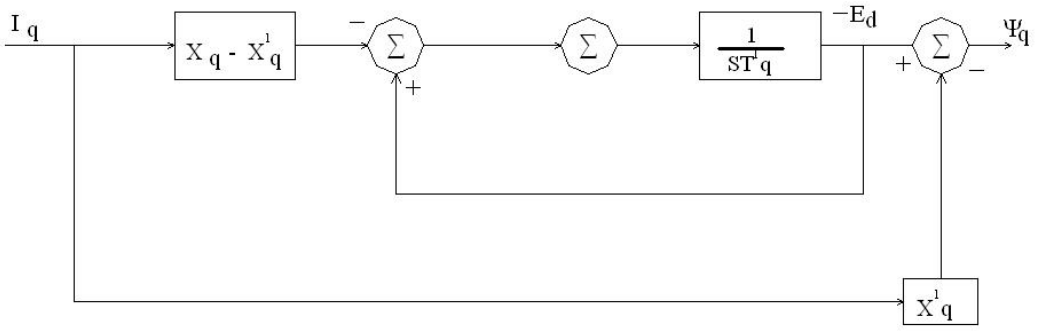

(b)

Fig. 7. The transfer function of the transient machine model, where Xd is the direct axis reactance, X´d is d-axis transient reactance, Xq is the quadrature axis reactance, X´q is Q-axis transient reactance, and T´d and T´q are the direct and quadrature transient time constants.

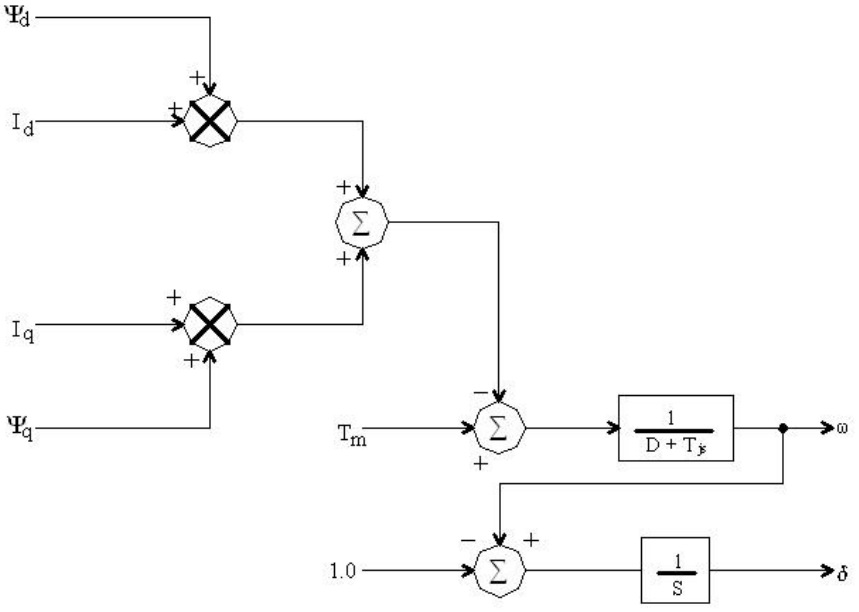

Fig. 8. Computation of torque and speed in the transient machine model

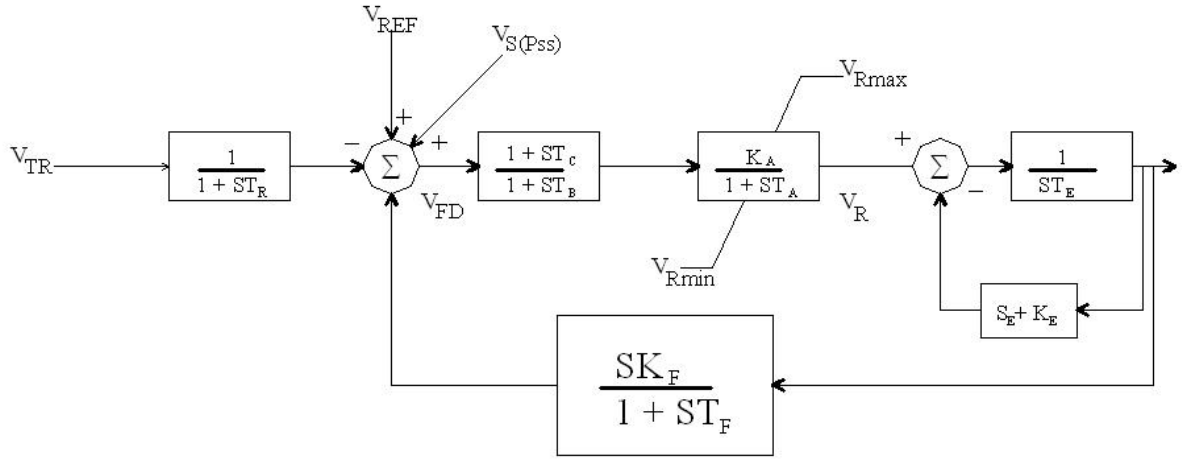

Fig. 9: AVR and exciter model for synchronous generator, where SE is the saturation effect, all Ks are constant gains, and all Ts are time constant

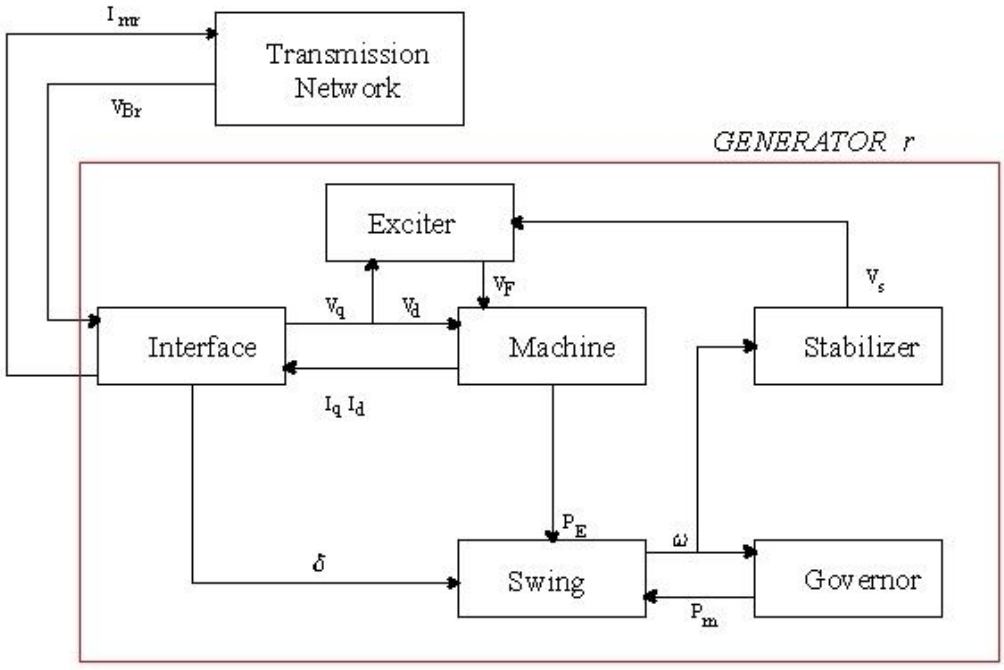

Fig. 10: Generator model for transient stability study

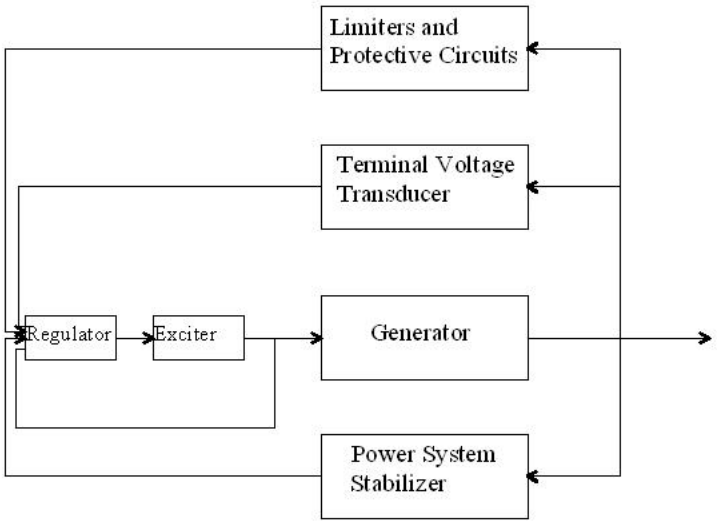

Fig. 11: Functional block diagram of a synchronous generator excitation control system.

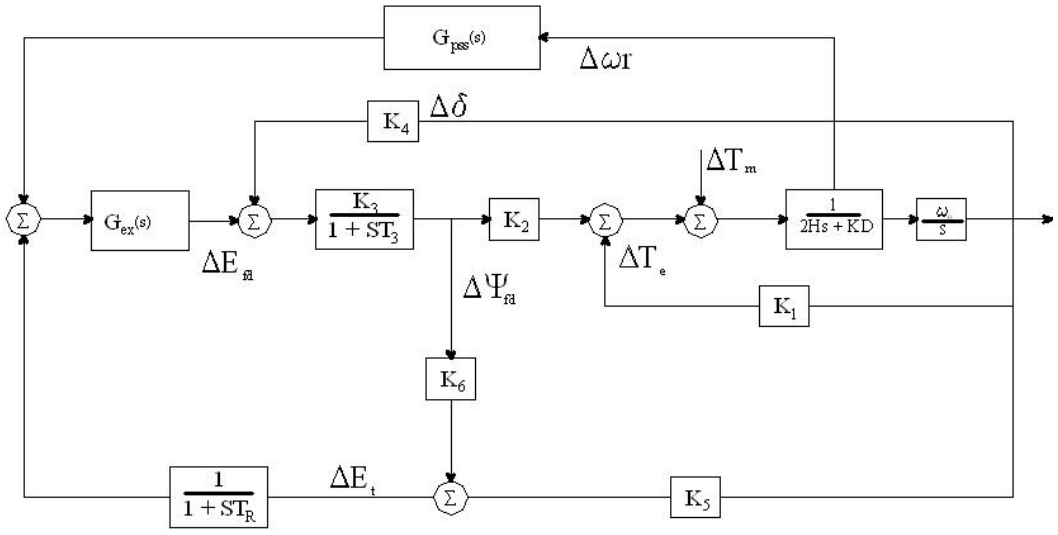

Fig. 12: Block diagram representation of AVR and PSS

Conclusion

Models for transient stability depends on what purpose and accuracy of result required. The classical method of assessing stability gives reasonably accurate result but for detailed analysis, transient dynamic data for system components and their time constants have to be modelled alongside the major components.

References

CIRGE Working group 1977 'Modelling of static VAR System for System analysis' Electra (51) 45 – 74.

IEEE Committee report 1973 Dynamics models for steam and Hydro turbines in power systems studies, IEEE transaction on power apparatus and systems. PAS – 92 (6), 1904 – 1915

P. L. Dandeno and P. Kundur, 1993, A non-iterative transient stability program including the effects of variable load – voltage characteristics. "Transaction on power apparatus and systems". PAS – 92(5), PP. 1478 – 1484

Task Force 38.02.14 "Analysis and modelling needs of power systems under major Frequency disturbance, Technical report, CIRGE, January, 1999.

J. Arrillaga, C. P. Arnold, B. J. Harker. "Electric Energy System, An Introduction" Tata – MCGRAW – HILL Publishing Company Ltd. New Delhi (1965).

P. Kundur, Power System stability and controlMCGRAW HILL, NEW–YORK, 1994.

J. Arrillaga, C. P. Arnold, B. J. Harker. "Computer Modelling of Electrical Power Systems", John Wiley & Sons. New – York.