UJEAS

UNIZIK JOURNAL OF ENGINEERING AND APPLIED SCIENCES

UNIZIK Journal of Engineering and Applied Sciences 2(1), June 2023, 166-176
Journal homepage: https://journals.unizik.edu.ng/index.php/ujeas
PRINT ISSN: 2992-4383 || ONLINE ISSN: 2992-4391

Overview of the conversion of flood waste water to electric power by modelling, sizing and characterization of the water purifier, water electrolyzer and polymer electrolyte membrane fuel cell

O.C. Igwilo*, M.B. Shitta, O.O.E. Ajibola., B.P. Nwosu, A.O. Kedo, C.S. Okwara, P.O. Anyasi, C.A. Eguma

National Centre for Energy Efficiency and Conservation (Energy Commission of Nigeria), Faculty of Engineering, University of Lagos, Lagos, Nigeria

*Corresponding Author's E-mail: christianroryevergreen@gmail.com

Abstract
The quagmire of waste water flooding around the vicinity of the Faculty of Engineering at the University of Lagos has become an issue of concern for the management of the university, due to the prolonged flooding. Despite the installation of pumps in the vicinity to mitigate the flooding, the issue has not been resolved and the flooding is still evident till date. The focus of this work is to design an effective water mitigation system to evacuate the flood and also utilize the waste water by converting it to useful electricity. In this work, 6 modules of 450W solar system was used to supply voltage to the 12Watt direct current pump and the 1700 W from the solar panel will be fed to the water electrolytic system which will separate the water molecules to Hydrogen and Oxygen, where the oxygen gas is fed to a storage tank which can be used for medical purposes in the University of Lagos Health Centre. The hydrogen is supplied to a Polymer Electrolyte Membrane Fuel Cell. A water purifier was incorporated before been connected to the electrolyzer. An amount of 33.5 Kg/hr of Hydrogen gas is the amount needed to produce 1KWh of electricity from the Polymer Electrolyte Membrane Fuel Cell. The fuel cell power output through mathematical modelling had a power output at 8.4KW.

Keywords: Polymer electrolyte Membrane (PEM) fuel cell, direct conversion of water to electricity, water electrolyzer, National Centre for Energy Efficiency and Conservation, Hydrogen gas

1. Introduction

Due to climate change, the global rise in temperature has caused the increase in the risk of floods (IPCC, 2012) However, the impact of different scenarios on regional precipitation projections is negligible throughout the twenty first century, compared to the uncertainties and irregularities with internal variability and model diversity. (Ambarish & Raymond, 2017). Energy in this modern-day era has to be tied to sustainable development, in order for reliable, feasible and efficient systems. Emphasis has to be laid on importance of energy in achieving sustainable development. (Blessed & Samuel, 2017). The background of the problem of this research work came as a result of the fact that during rainy periods in Lagos in the demographic area of the University of Lagos, there have been water logged areas on the road that leads to the Vice- Chancellor's house in the University of Lagos.

The problem of this research work was conceived as a result of the perennial flood waters usually logged around the Faculty of Engineering during the rainy season. The flood issue has become an issue of concern to University of Lagos management. The situation poses environmental concerns to staff and students and even visitors who ply the road. The solution is to utilize the best method to convert the flood waste water to electricity, thereby mitigating the effects of the flood water on the environment. The methodological process utilizes electrolyzer to produce hydrogen gas which is the fuel that will be utilized by the fuel cell. As at 2009, commercially available conventional alkaline electrolyzer and advanced polymer membrane electrolyzer for water electrolysis was quite expensive (Prasad, 2009). After sizing and installing a water electrolyzer, a fuel cell is connected to convert the fuel from the water electrolyzer which is hydrogen which will be fed to the fuel cell. The fuel cell will then produce power. (Prasad, 2009). The author of the article designed a simple and clean water electrolyzer which was fabricated with easily available inexpensive materials for small scale production of Hydrogen. Renewable energy source using solar Photo-voltaic energy was utilized to apply voltage to the electrolyzer. (Prasad, 2009).

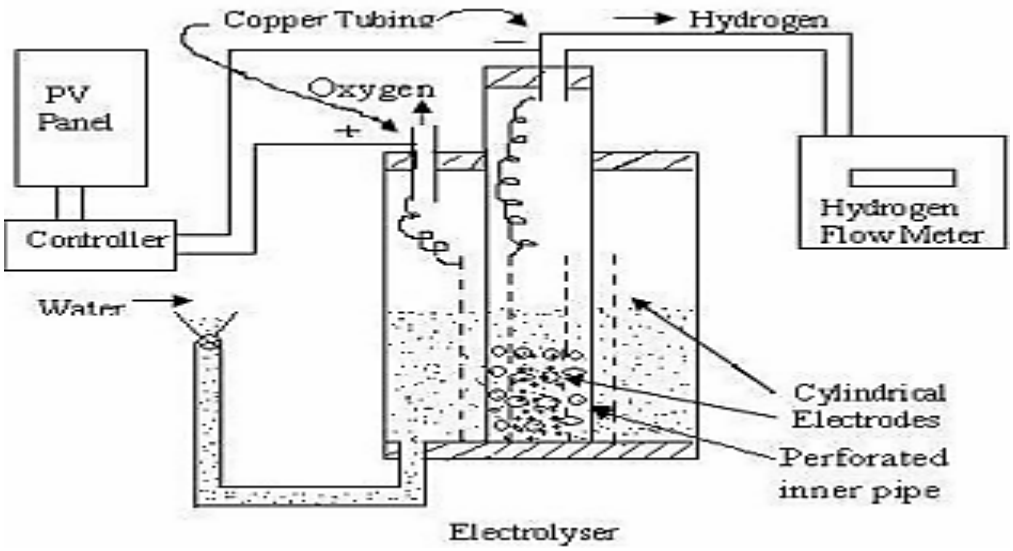

Figure 1 Diagram of water electrolytic process using solar Photo-voltaic Energy (Prasad, 2009).

The above **Figure 1** shows s set up schematic diagram of a water electrolytic process powered by a solar photo-voltaic system used to separate the water molecules to Hydrogen and Oxygen. The reason why the water electrolyzer will be needed, is to separate the water molecules and release hydrogen for the fuel of the PEM Fuel cell. Hydrogen is an energy carrier and has become increasingly significant in the last two decades. It derives its popularity from the fact that an increase in the energy cost of Hydrogen by the uncertainty in the future projected uncertainty of oil reserves. (Bockris, 1981). Mrinmay utilized highly conductive Anion Exchange Membrane which is one of the few requirements for producing efficient hydrogen by water electrolysis and high power in fuel cell operation. The author inferred that the Anion Exchange Membrane Fuel cell had high durability using platinum free anode and cathode electro-catalysis. However, the durability of the Anion Exchange Membrane Water Electrolyzer is of concern not producing enough volume of Hydrogen (Mrinmay, 2020).

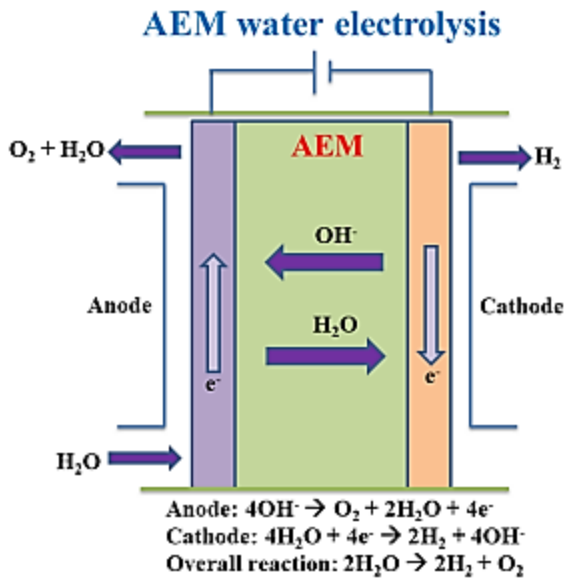

Fig 2 Schematic representation of Anion Exchange Membrane Water Electrolysis for the production of Hydrogen (Mrinmay, 2020)

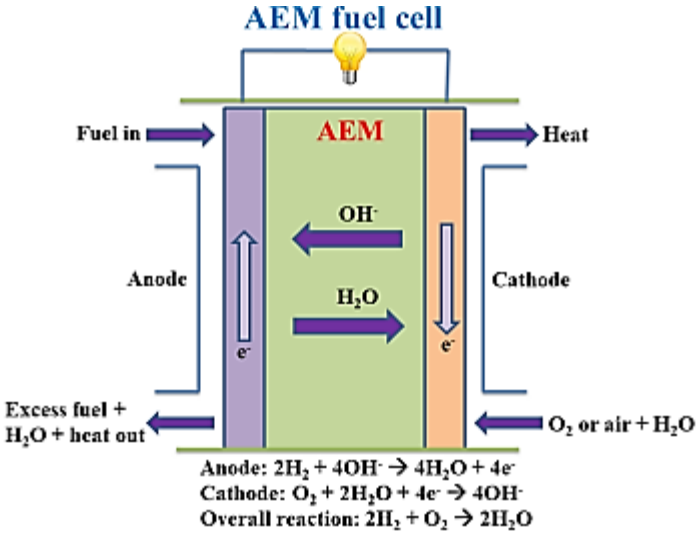

Figure 3 Schematic representation of Anion Exchange Membrane Fuel cell using hydrogen from the electrolyzer (Mrinmay, 2020)

In Figure 2 and Figure 3 above, show the water sequestered from the environment after been purified and sent to an Anion Exchange Membrane (AEM) water electrolyzer and an Anion Exchange Membrane Fuel cell for using the Hydrogen gas from the AEM water electrolyzer to serve as fuel to produce power from the AEM Fuel cell. This has a draw back as it does produce enough Hydrogen in a specific period of time. However, there are existing water electrolyzers that can produce 300ml/min during operation. (Alibaba, 2022). The significance of this work will be an innovation which has not been implemented anywhere in Nigeria. This study is of great economic significance to the University of Lagos, because the clean water can be produced and converted to electricity. Also, the oxygen produced by the water electrolyzer can be supplied to the University of Lagos' Health Center to help in-house patients who need the Oxygen Gas. The aim of this work is to solve the water logging problem and utilize the flood water and convert the waste water to electricity by modelling, characterizing and sizing a water purifier, water electrolyzer and a polymer Electrolyte fuel cell system as they are coupled to one another.

The objective is to execute series of methodological processes to achieve water conversion to power by the following:

- Model, size and characterize the solar photo-voltaic system to supply power to the dc pump and water electrolyzer where the flood waste water is purified by the water purifier before been sent to the water electrolyzer.
- Model, characterize and size the rain water purifier, water electrolyzer and fuel cell for generating power

2.0 Material and methods

Firstly, the Hydrogen flow process has to be calculated.To ascertain the optimal amount of the volume of Hydrogen that can be produced within a specific period within a day..It should be known that the gaseous form will be utilized due to the fact that the liquefied Hydrogen has to be kept under low temperature which is not feasible in this tropical part of Africa. Secondly, in sizing also known as modelling of the Solar Photo-Voltaic system for both the water electrolyzer and the water pump.It is necessary that the two sub-sytems mentioned above should have the same battery specification for the solar energy source across the entire system. Characterisation is needed to ascertain the function paramters and how much of the output can be produced accurately. There has to be a characterisation of the water electrolyzer and how much oxygen and hydrogen can be produced. After that, the characterisation of the fuel cell power system will be executed. Finally, this work will deploy an inverter which will also be sized to generate alternatig Current (AC) Power.

Process for modeling, sizing and characterisation of the Hydrogen flow process, solar panel, water electrolyzer and Polymer Electrolyte PEM Fuel Cell

This method proposes a solar power is deployed, whose current passes through a 30 Amps charge controller and a 12V Battery for the solar pump .The solar pump then sequester the rain water from the water logged environment and sends it to a storage tank and a flow switch is connected to control the flow of the water which is then passed to the rainwater purifier, the purified rainwater is then fed through a water electrolyzer in which a 12v battery is powered by the 6 modules of 450 W solar Photo-voltaic system. lt is supplied to separate the water, molecules to give hydrogen and oxygen gas and then the hydrogen from water electrolyzer is then passed into a 12 V Fuel Cell stack system. The oxygen is collected too and can be used to supply the University's health center to attend to the patients who need it. The output from the fuel cell is fed to an inverter and then a load.

The modelling, sizing and characterization of the volume of Hydrogen flow process was executed and then followed by the modelling and solar sizing and characterization of the Photo-voltaic or solar system and then finally the modelling, sizing and characterization of the Polymer Electrolyte membrane system to determine how much can be produced considering its resistances in all ramifications. The first task is to calculate hydrogen volume flow process from the water electrolyzer as seen in sub-title 2.1

2.1 Modelling of the Volume of Hydrogen flow process

The water electrolytic process is faced with challenges in terms of the energy required to produce 1kg of Hydrogen. From literature to produce 1Kg of hydrogen requires far greater energy than theoretical energy which is about 33KWh/Kg corresponding to about 4.5KWh/Nm^3 in most electrolyzers. (Lamy, 2016)**.** Table 1 shows the unit conversion data for Hydrogen which will applied thereafter. They have also an efficiency less than 70%. (Lamy, 2016)

Table 1 Unit Conversion Data for Hydrogen (Universal industrial gases inc, 2017)

S/N	Weight	Gas	Liquid
1	Kilograms (Kg)	Normal Cubic meters (Nm^3)	Litres (l)
2	1.0	11.126	14.128

If 1000 g produced requires a 33KWh (Lamy, 2016), therefore, 33Wh of energy will produce 1g. The amount of hydrogen needed for the fuel cell has to be calculated.

If 1.667KWh of chemical energy will give → 1KWh of electricity (1)

1KWh of chemical energy will give 0.6 KWh of electricity.

Also, 1kg of Hydrogen is equal to 141.8MegaJoules. 1KWh equals to 3.6 Mega Joules.

$\frac{1.667 \times 3.6}{141.8}$ = 42.3g of Hydrogen

Hydrogen gas has a molecular weight of 2g → $22.4 Litres$

$$\text{Therefore: } 42.3g \rightarrow = \frac{42.3g \times 22.4\ Litres}{2g} = 473.75 \text{ Litres}$$

From standard unit:

1L/Hr → 0.01667 L/m

473.75 L /Hr →$473.75 \times 0.01667 = 7.897\ L/m$

1 Litre → 1000 Nm^3

From standard unit: 167l/m→ 10 Nm^3/hr

$$7.897 \text{l/m} \rightarrow 7.897 \times \frac{10}{167l/m} = 0.4728 \text{ Nm}^3\text{/hr}$$

From Table 1: 11.126 Nm^3 → $1Kg$

Therefore: 0.4728 Nm^3/hr → $\frac{0.4728}{11.126}$ = 0.0424Kg = 42.4g /hr

Therefore: Operating time 4hours= 42.4g × 4 =169.6g =0.169 Kg the amount of hydrogen produced within the day for total time of 4 hours. This is the amount of Hydrogen needed to produce 1KWh of electricity from the fuel cell. (Mook, 2020). The solar- sizing will then be carried out.

2.2 Modelling, characterizations and Solar sizing

2.2.1 Total Watt-Hours per day

2.2.1.1Total watt hour rating for the electrolyzer

Total Watt-hours (W_h) (Energy) = Total watt supplied by panel × $operation\ time\ of\ electrolyze$ (2)
(Leonics, 2019)

About 39KWh will give 1kg Hydrogen. So, if 1kg gives 39Kwh conventionally

From 2.1: 0.169Kg = The electrolyzer will require

0.169 kg ×39 KWh = 6.591KWh= 6591 Wh

For watt rating needed by the electrolyzer = $\frac{\text{Energy}}{operating\ time}$ (3)

Operating time = 4 hours

Therefore;

Total watt rating for the electrolyzer = $\frac{6591}{4}$ = 1647.75 W

The modelling, sizing and characterization of the dc pump will now be executed.

2.2.1.2 Total watt hour rating for the DC pump

Operation Hour Parameters

Due to sensitivity and environmental hazard, for monitoring the system in real time this system has to be operational within working hours from 9am to 4 pm. There will be one hour interval in-between to allow the Oxygen and hydrogen tank to depressurize respectively, while the later will supply the fuel cell. This, gives the estimated operating hours as 4 hours.

Total watt-hour used by DC Pump= $Power\ rating\ of\ Dc\ Pump\ \times System\ Operation\ time$ (T_N) (4)

Power rating of DC pump =12 w

System Operation time (T_n)= 4hr

Total watt-hour used by pump = 12W × 4 hrs = 48Wh

Total Power requirement = Total power of electrolyzer + Total power of Solar DC pump (5)

Total power of electrolyzer = 1647.75 W

Total power of solar DC pump = 12 W

Total watt Power requirement = 1647.75 + 12 = 1659.75 W

Total energy used by the system = Total energy used by the elctrolyzer + Total Energy used by pump (6)

=6591Wh + 48 Wh = 6639 Wh

2.2.2 Total PV Energy needed by the panel

6639 Wh × 1.3 = 1315.6 Wh ≈ 8630.7 Wh

The panel generating factor = 3.35 (Blessed & Samuel, 2017)

2.2.3 Total Watt-peak rating (Wp) of PV Panel capacity needed

Total W_P of PV Panel capacity needed = $\frac{\text{Total PV Panel Energy Needed}}{3.35}$ = $\frac{8630.7}{3.35}$ = 2576.32 W_p (7)
(Leonics, 2019)

2.2.4 Calculation of the number of PV Panels for the system

Number of PV Panels needed = $\frac{2576.32\ \text{Wp}}{450}$ =5.7 ≈6 modules–for 450 W solar module (8)
(Leonics, 2019)

2.3 Modelling and Battery Sizing for the electrolyzer and solar DC Pump

The batter sizing was thus calculated. (Leonics, 2019)

Battery capacity Ah) = $\frac{Total\ Watt\ Hours\ Per\ day\ Used\ by\ Appliances \times Days\ of\ autonomy}{0.85 \times 0.6 \times VN}$ (9)

Where V_N is the nominal voltage of a single battery.

Battery loss factor = 0.85

Depth of discharge = 0.6
Total Watt-Hours per day (Wh) = 6639Wh

Days of autonomy = 1day; Nominal Voltage = 48 Volts

Battery capacity (Ah) = $\frac{6639\text{Wh} \times 1}{0.86 \times 0.6 \times 48}$ = 268.047 Ah = 300Ah
Where Ah is Ampere-hour rating. If 2 48 volt deep cycle battery = 150 Ah (48 Volt battery) for the water electrolyzer and solar DC pump.

2.4. Modelling and Sizing of charge controller

Based on the above methodology, the solar charge rating will thus be calculated:

Short circuit current of 450 W solar panel = 9.73 A (Foshan Tanfon Solar Energy Technology, 2022)

Solar charge controller Rating = (Number of strings × I_{SC}) × 1.3 (9)
(Leonics, 2019)

Where I_{SC} = Short-circuit current

Number of strings = 6

Solar Charge Controller rating = (6 strings × 9.73) × 1.3 = 75.894A

Ampere Rating of one charge controller= 40 Amps

Number of charge controllers to be deployed = $\frac{Solar\ charge\ controller\ rating}{Ampere\ Rating\ of\ one\ charge\ controller}$ = 1.89 ≈ 2 (40 Amps charge controller (10)

2.5 Fuel cell Power Modelling and sizing

2.5.1 Fuel Cell Modelling and sizing Characteristics

The **Figure 4** below shows the cell potential plot against the current density which current per centimeter square for a single fuel cell unit. It should be noted that this current unit of measurement in **Fig 4** has to be converted to standard unit for calculation. This graph plot determines how much power is produced from the fuel cell. It is of quintessential value. The average electric cell potential in volt varies around 0.25 V to 0.6 V after all voltage drops due to open circuit loss due to fuel cross over, activation loss caused by rupture of the bonds of the chemical process, linear drop due to Ohmic losses and finally mass transport losses due to high current densities (Spiegel, 2008)..

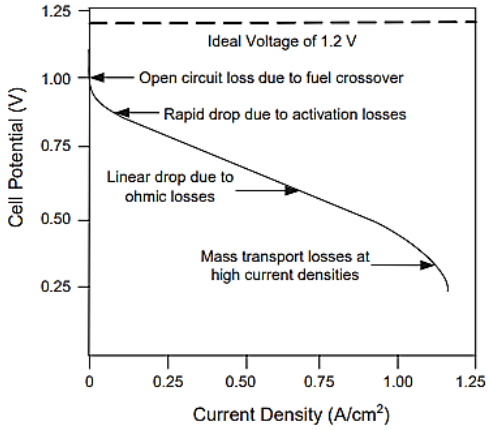

Figure 4: A plot of the fuel-cell voltage performance against current density

2.5.2 Fuel cell main modelling, sizing and characterisation

Voltage of a single fuel cell (Average)= 0.6 volts

Desired voltage = 12 volts

No of fuel cell stack= $\frac{Desired\ Voltage}{Voltage\ os\ single\ fuel\ cell}$ (11)
(Spiegel, 2008)

Figure 4 Characteristic curve of cell potential against current density

No of Fuel Cell stack = $\frac{12}{0.6}$ = 20

Current Density = 700 A/m^2

No of fuel cell stack in series = 20 stacks of 0.6 voltage cells

Power output of Fuel cell stack= No of cells $\times$ $Voltage$ $\times$ $Current\ Density$ (12)
(Spiegel, 2008)

Power output of the fuel cell stack = $20 \times 0.6 \times 700$ = 8400Watts = 8.4 KW

Number of operating hour of appliances (T_N) = 4hours

Energy produced = 8.4×4 = 33.6KWh

If 8.4 KW power with an energy of 33.6KWh will be produced and dissipated with an operation

In 4 hours.

2.6. Inverter Sizing

From **2.5**According to design methodology the inverter size must be three times the total watt of appliances due to best practices. The power rating must be 25% larger in size. (Leonics, 2019)

Total Rated power = 8400 W

Inverter sizing wattage= 0.25×8400 Watts = 2100 Watts (without powering moving parts)

Accurate size = 8400 W + 2100 Watts = 10,500

Power factor of inverter = 0.91

KW = Power factor of inverter $\times$ KVA (13)

Where KVA is reactive power.

KVA= $\frac{KW}{0.91} = \frac{10500}{0.91}$ = 11,538.46VA = 12 KVA Inverter size

2.7 Main system design

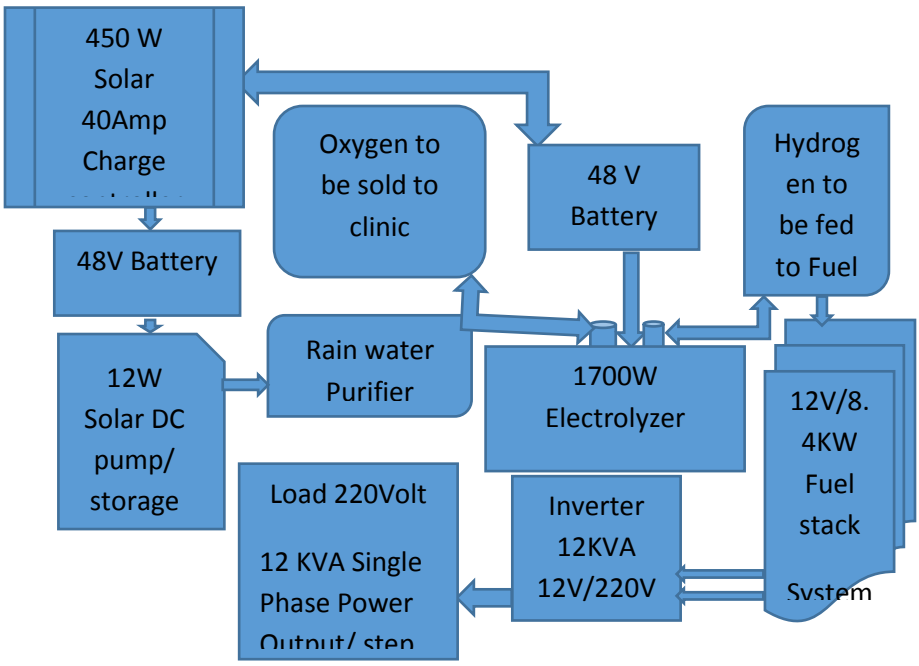

Figure 5 Design of the Conversion of rain water to Electric power using water Electrolyzer and PEM Fuel cell.

In Figure 5 the requirement of solar modules or photo-voltaic (PV) array is 6-450 W solar PV modules in which 2- 40 amps charge controllers protect the amount of current going to the sub-system units. The PV array uses 2-48volt 150 Ah batteries and supplies a DC pump water device and the electrolyzer which needs a power of 1700 W approximately. The 12W solar DC pump removes the water from the environment and sends it to a purifier. The purified water is fed into the electrolyzer which separates the water molecules to Hydrogen and Oxygen. The oxygen is stored in a tank and sent to the clinic for in-house patients in need of the gas. The Hydrogen gas goes to the Hydrogen tank at a rate of 42.4g/hour and then fed to the fuel cell, producing a power output of 8400W with 20 stacks to make it up to 12V. A 12KVA inverter is connected to the output to invert the direct current to alternating current and then supplied to an external load at 220V AC. The operating time was estimated at 4 hours. A control system engineer might have to be deployed for the implementation of the system to embed a control mechanism for the entire system

2.8 Specification of DC pump

In sizing, it is conventional that matching must be done. If the solar panel supply's 48 v to the DC solar pump, the DC pump has to also be 48 volts. Also, the battery being fed to the water electrolyzer has to be 48 volts too. To have better current both batteries for the DC pump and water electrolyzer has to be connected in parallel to maintain the same voltage and boost the current. The power output of this work is quite significant and could become sustainable in the long run to sequestrate flood from the environment and convert it into useful power. Below is the specification for the dc pump, because it is required that the wattage has to be as low as possible for creating efficient systems.

- DC 48V, 12 W 0r 0.016 Hp Power motor
- Flow $\geq 12lpm$, noise < 60DB
- Vacuum degree > - 75KPA (-562 mmHg), maximum pressure 220KPA
- High efficiency, low noise, long service life, high and low temperature resistance, liquid or air-pumpable.
- With 1m silicone tube (Alibaba, 2022)

3.0 Results and Discussions

It should be predicted that the system will be operational during rainy season and during dry season. Tap water can be utilized to support the rain water purifier if required.

Table 2 Result Design specification output

S/N	Design specifications/parameter output	Value
1	Single unit Solar panel Module power rating	450W
2	Size of Charge controller	40 Amps (2 units)
3	Battery voltage rating to supply power to pump from PV	2 batteries 48 V 150 Ah
4	Power rating of solar DC pump	12W/0.016 Horse Power
5	Battery to supply Electrolyzer	48V
6	Power Rating of water Electolyzer	1647.75 W ≈ 1700W
7	Number of stacks of fuel cell	20 stacks in series
8	Flow rate of hydrogen	42.4g/Hr
9	Rated power output of fuel cell power system	12V/ 8.4 KW
10	Inverter Phase- type	Single phase
11	Input/output inverter voltage	12V/220V
12	Inverter Power output rating	12KVA
13	System Operation time (Tn)	4 Hours
14	Number of solar modules	6 modules
15	Total Power produced by the fuel cell	8.4KW
16	Total Energy produced	33.6KWh

The output of the inverter which is 12KVA is enough to power most key appliances of the building. This can remain sustainable if a control system is designed to monitor and control the Hydrogen flow process. The fuel cell should have a number of 20 stacks. The natural water can be supplied during dry seasons when there is no adequate water-logged flow. The total energy produced by the fuel cell was pegged or estimated at 33.6KWh.

4.0. Conclusion

It was observed that this work was very innovative due to its conceptualization of converting flood water to electricity as this has never been conceived globally in any known literature. Even this work got people curious and came under the radar of scientists who wanted to replicate the model in other similar works during which this work was kept secure and discreet to the best of our abilities It could also be replicated in housing systems to provide power in rainy regions that will have flood water and there was also an alternative to supply water in case the flood water had diminished. This work also be replicated in automobile for commuting as it changes the paradigm shift on energy application.

The following objectives of the Modelling, sizing and characterization the solar photo-voltaic system to supply power to the dc pump and water electrolyzer where the flood waste water is purified by the water purifier before been sent to the water electrolyzer was executed and also the Modelling, characterization and sizing of the rain water purifier, water electrolyzer and fuel cell for generating power was also executed and reached a conclusive end. The systems in Figure 5 has showed how they will be coupled in real situations. A control system will be recommended for future work to cater to safety needs of the control of flow process and pressure of the gases produced by this system due to the fact that the Hydrogen and Oxygen are inflammable

5.0 Recommendation

Moreover, the recommended fuel cell type is polymer Exchange Fuel cell Membrane which is to be fed with Hydrogen which is supplied from the water Electrolyzer. To accelerate the process of the water electrolyzer to produce Hydrogen and Oxygen, there are chemical compounds already existing that can solve this challenge and more work has to be done to incorporate different types of catalysts for efficient and optimal system performance.

Acknowledgements

I want to acknowledge the efforts and guidance of my immediate supervisor of my organisation Dr Engr Shitta Manasseh and also Engr Charles Asirra Eguma, a fellow colleague for his efforts in fine tuning and vetting this work. I also want to acknowledge the leadership qualities of the Director of my organisation, Prof (Engr) O.O.E Ajibola for initiating this work at the National Centre for Energy Efficiency and Conservation (NCEEC) under the parent organisation the Energy Commission of Nigeria.

Nomenclature

Ah	Ampere-Hour rating
Hp	Horse power
I_{SC}	Short circuit current
KVA	Reactive power
T_n	System Operation time
V	Electric potential
V_N	Voltage of a single unit battery (Nominal voltage)
Wh	Watt-Hour or Energy
W_N	Power rating of appliances
W_P	Total watt peak rating of the panel array

References

Alibaba, 2022. "Dc Solar Water Pump, 2022. https://www.alibab.com/trade/search?fsb=y&indexArea=producten&catid=&tab=all&SearchText=powe+rating+of+solar+dc+pump0>

Ambarish V Karmalkar & Raymond S Bradley, 2017. "Consequences of Global warming of 1.5ºC and 2ºC for Regional Temperature and precipitation charges in the contiguous United States plus ONE 12 US e0168697.

Blessed OLalekan Oyebola & Samuel Oluwaseyi Awofodu, 2017. "Energy Generation factor during rainy season in Nigeria. A study of 75 Watts Solar Collectors. Department of Computer Engineering technology and Dept. of Science Laboratory Technology, Gateway ICT Polytechnic Saapade, Nigeria, 2017.

Bockris, Conway, Yeaser E & White R.E,1981. Comprehensive Treatise of Electrochemistry. Plenum press.

IPCC, 2012. Managing the risks of Extreme Events and Disasters to advance Climate Change Adaptation" Cambridge University Press, 2012

Lamy, 2016, "From Hydrogen by Water Electrolysis to its Utilization in a PEM Fuel cell or in a SO Fuel Cell:Some considerations on the energy efficiencies", University of montpellier.Cedex, France., Elsevie

Leonics Co LTD, 2019."How to Design Solar PV System" , 2019 https://www.leonics.com/support/article2_12j/articles2_12j_en.php

Mook Williams 2020, "How much Hydrogen gas is required in a fuel cell to produce 1KWh of electricity". Technology Provider at Intel Company.

Mrinmay Mandal, 2020. "Recent Advancement on Anion Exchange Membrane for Fuel Cell and Water Electrolysis" School of chemical and Bio-molecular Engineering, George Institute of Technology, Atlanta GA 30332-0100., 2020.

Prasad, 2009. "Design of a simple and water electrolyzer for the production of Solar Hydrogen, department of chemical Engineering and technology, institute of technology, Banaras Hindu University, Varanasi, 2210005, U.P., India, 2009.

Spiegel Collins, 2008, "PEM Fuel Cell modelling and Simulation using Matlab, Elsevier Inc., pp. 1-50

Universal Industrial Gases Inc, 2017. "Unit Conversion data for Hydrogen"(Universal Cryo Gas LLC, 2017., 2016 <Accessed 24th October, 2022