JEAS

JOURNAL OF ENGINEERING
AND
APPLIED SCIENCES

Journal of Engineering and Applied Sciences 12 (2018), 1-10

PRE-DESIGN SIMULATION OF ENHANCED FUEL CELL POWER SYSTEM

IGWILO O.C* and KEHINDE A.J.

National Centre for Energy Efficiency and Conservation (Energy Commission of Nigeria),
Faculty of Engineering, University of Lagos, Lagos, Nigeria
***Corresponding Author's E-mail:** ossy_igwilo@yahoo.com

Abstract

This research work simulated a pre-design optimized Fuel Cell for power system. The general background of the fuel cell was discussed. A comparative study was conducted to high-light the best suitable fuel cell type. The governing equations of the selected fuel cell type were discussed. The focus on the work was to assume parameters, generate data for the partial exit pressure of the hydrogen gas, channel length and electric potential through iterations of free Gibbs's energy formula for conversion of chemical energy to electrical energy. A method of numerical analysis was used to generate result for analysis. Thereafter, there were plots of the partial exit pressure of the hydrogen gas against the channel length and a plot of the electric potential against the channel length. The result showed that the increase in channel length led to exponential reduction in exit partial pressure of the hydrogen gas. Moreover, the increase in channel length led to the drop in electric potential. It was deduced for design purposes or fabrication of the fuel cell, the channel length should be compact and restrained from being lengthy as much as possible to have a significant electric potential output.

Keywords: Electric potential, fuel cell, exit partial pressure, electrolysis, free Gibb's energy, reaction time, proton electrolyte membrane.

1.0 Introduction

The fuel cell contains a positively charged electrode called the Anode and a negatively charged electrode called the Cathode. A proton exchange membrane (PEM) is situated between the two electrodes. An electrolyte Phosphoric acid is used. Hydrogen gas is fed in through the right side and the catalyst used is nickel, Chromium or platinum supporting the electrolyte breaking the hydrogen gas into ions. It should be noted that the electrons cannot pass through the Proton exchange membrane. The membrane allows only protons or positive hydrogen ions to pass through. The stripped electrons at the left side of the anode go through a wire to combine with positive charged ions to produce direct current. The remaining hydrogen ions combine with oxygen to release heat and water (Thomas and Jennifer 2007). The design of the optimum performance of the electric potential is still a challenge and therefore this study wish to define the governing equations for the cell terminal voltage and reverse voltage considering the activation loss, ohmic loss and concentration loss which are intrinsic properties of the desired fuel cell type. More so, discuss the governing equations for the fuel cell stack voltage model. It is expected that the result obtained will determine the best design for maximum power output for the fuel cell which will make it an efficient power system.

In the synopsis of this research work, the types or classes of fuel cell were highlighted. The principle of operation of the polymer electrolyte membrane fuel cell which was the desired and chosen class of fuel cell

was extensively elaborated. The governing equations were also highlighted which led to data of the channel length, exit hydrogen pressure and electric potential being generated. The data was then analyzed, and graphs were plotted in excel application and interpreted. Then a conclusion was finally re ached.

In this research work a fuel cell type was chosen, which is **Polymer electrolyte membrane fuel cell (PEMFC)** which has its competitive advantages over other fuel cell types with low moderate operating temperatures, fast start up time and high-power density. It has a minor setback which requires the membrane to be re-humidified for the achievement of an effective and efficient fuel cell performance. (Antonio 2011)

Table 1: Data of different types of Fuel Cell

Cell type	Mobile ion Fuel	Temperature	Fuel
PEMFC	H^+	50-90 ^{0}C	H_2
DMFC	H^+	50-120^0 C	CH_3 OH
AFC	OH^-	60-250^{0}C	H_2
PAFC	H^+	~ 220^{0}C	H_2
MCFC	CO_3^{2-}	~ 650^{0}C	H_2,CO, CH_4
SOFC	O^{2-}	750-1000^{0}C	H_2,CO,CH_4

PEMFC (Polymer Electrolyte membrane Fuel Cell), DMFC (Direct Methanol Fuel Cell), AFC (Alkaline Fuel Cell),

PAFC (Phosphorus acid Fuel Cell), MCFC (Molten Carbonate Fuel Cell), SOFC (Solid Oxide Fuel Cell).

2.0 Material and methods

2.1 Principle Operation of Polymer Electrolyte Membrane (PEMFC)

Polymer electrolyte membrane is an easy to use technology with high power density generating satisfactory output and fast start-up time. (Fig 1). A PEMFC consists of an electrolyte sandwich between two electrodes. The electrolyte has a special property that allows positive ions from the hydrogen gas molecule to pass through while blocking electrons which are negatively charged ions. (Antonio, 2011).

Hydrogen gas passes over one electrode called an anode and with the help of a catalyst separate the hydrogen gas ions electrons and hydrogen protons.

The chemical reaction that describes this process is

Reaction at the anode: $2H_2 \rightarrow 4H^+ + 4é$ (2.2)

The protons pass through the electrolyte towards the cathode but they have to pass through the membrane. The electrons close to the circuit by passing through the anode and through the electric load.

In the cathode the protons and electrons meet with oxygen to produce water. This reaction is described by **Reaction at the cathode**: $O_2 + 4H^+ + 4é \rightarrow 2H_2O$ (2.3) (Wikipedia 2017)

The overall reaction that takes place in the fuel is:

$2H_2 + O_2 \rightarrow 2H_2O$ (2.4)

Each cell produces between 0 and 1 volts according to the fuel cell operating conditions and the electric load connected, normally the voltage is close to 0.7V. In order to reach higher or greater voltage values, cells are assembled in series stacks (Wikipedia 2017).

The membrane is sandwiched between two electrodes (anode and cathode) made from a highly conducting material such as porous graphite. This is to give the maximum contact between the electrode, the electrolyte

and the gas. One special feature of the PEMFC is that the operational temperature is between 50 ^{o}C and 100 ^{o}C which permits and operates without thermal insulation. The polymer electrolyte membrane is an electronic insulator but an excellent conductor of protons. When the membrane becomes hydrated, the protons H+ ions become mobile. Depending on the membrane manufacturers and versions of the membrane, properties of the membrane differ. The thickness of the membrane varies from 50 to 175 microns which is approximately 2 to 7 papers thick.

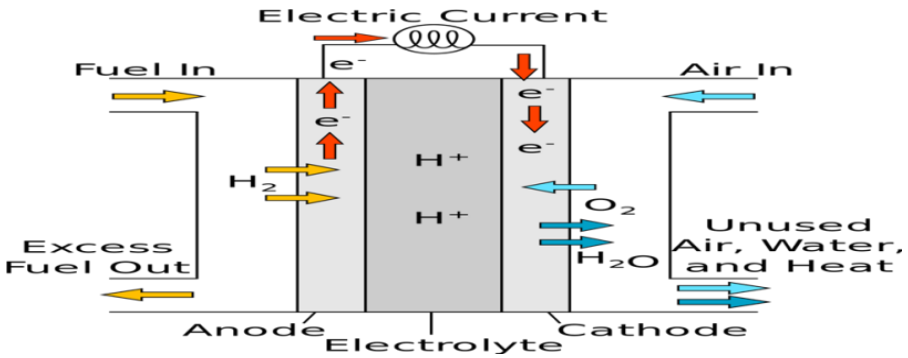

Adapted from (Wikipedia 2017)

Figure 1: Schematic diagram of polymer electrolyte membrane fuel cell

A small amount of platinum is applied to the cathode and anode to speed up the rate of the reaction. The structure of a membrane electrolyte assembly (MEA) is an assembly of the anode, electrolyte and the cathode, the three of them sealed together. This structure is normally less than one millimeter thickness.

2.1.1 Fuel Cell Stack Model

In this section the main FC Sack models are reviewed, these are the stack voltage, the anode flow and the cathode flow (Fig. 2.2). In the voltage model, an equation is used to calculate stack voltage for different operating conditions. The cathode and anode flow models use mass conservation along with the thermodynamics properties to calculate the pressure and the relative humidity of the reactant gas flow inside the stack. For all these calculations inside, the stack temperature is assumed to be constant. The processes inside the fuel cell are shown in fig 2.2 where MEA is the membrane electrode assembly that was explained before. The process of water transfer across the membrane will not be considered in this mobile review. (Antonio, 2011).

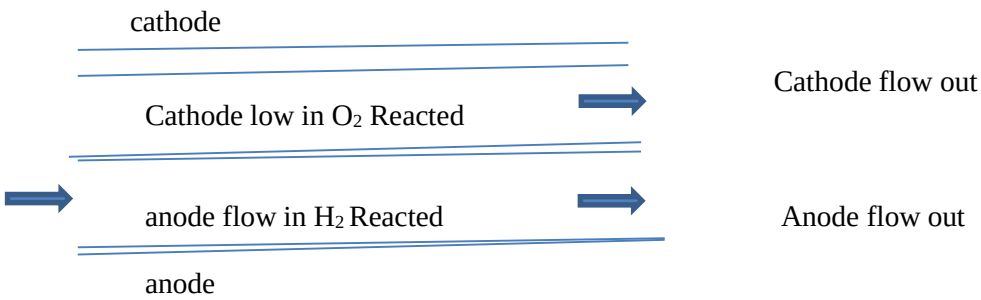

Figure 2: Fuel cell stack mass flow(Antonio, 2011)

2.1.2 Fuel Cell Stack Voltage Model

By means of energy balance, the fuel cell terminal voltage is calculated.

2.1.3 Fuel Cell Open Circuit Voltage

A FC Stack transforms chemical into electrical energy. The chemical energy produced by the reaction is calculated by the variation of the Gibbs free energy i.e. difference of the Gibbs free energy of the product and the Gibbs free energy of the reactant. (Antonio, 2011).

By using the Gibbs free energy, it is also possible to calculate the energy able to perform external work

The basic chemical reaction that takes place inside the FC is:

$H_2 + ½\ O_2 \rightarrow H_2O$ (2.5)

And the corresponding Δ Gibbs free energy is

$\Delta_{gf} = (gf)\ H_2o - (gf)\ H_2 - (gf)\ O_2$ (2.6)

It can be seen that the Gibb's free energy depends on the temperature and pressure. Therefore, as shown in table 2 after some calculation and simplification.

Table 2: Gibb's free energy for the reaction shown in equation (2.5)

Form Of Water	Temperature (®C)	Δ_{GF} (KJ mol^{-1})
Liquid	25	-237.2
Liquid	80	-228.2
Gas	80	-226.1
Gas	100	-225.2
Gas	200	-220.4
Gas	400	-210.3
Gas	600	-199.6
Gas	800	-188.6
Gas	1000	-177.4

Adapted from Porkuphan, 2004

The Reversible voltage of the fuel cell can be written as: (Antonio, 2011)

$$\mathbf{E} = \frac{-\Delta gf}{2F} = \frac{-\Delta g0f}{2F} + \frac{RT_{FC}}{2F}\ln\left(\frac{P_{H2}\ p_{O2}^{0.5}}{P_{H2O}}\right) \quad \text{Eq. (2.7)}$$

Where Δg^0F is the change in Gibb's free energy at `1bar, T_{FC} is the temperature of the fuel cell (in kelvin), $P_{H2,}$ P_{O2} and P_{H2o} are the partial pressure of hydrogen, oxygen and water vapor respectively (expressed in bar), R is the universal gas constant 8.31451J (Kg.k) and F is the faraday constant (96485 coulombs) and E is the fuel cell voltage. Different values of the Gibb's free energy of equation (2.8) at 1bar are given in (Table 3). The negative sign of Δg^0F is referred to the fact that energy is released.

The fuel cell process is not reversible, consequently, some of the chemical energy is converted to heat and the fuel cell voltage, V_{FC} is less than that in equation (2.7). From observation if the partial reactant pressure is higher, the electrical voltage will be resultantly higher. E in equation (2.7) is the open circuit voltage also

known as Nernst voltage of an hydrogen fuel cell. The term - Δg^0F/2F varies from standard state (25®C and 1atm) reference potential (1.229v) in accordance with the temperature. As shown in (Pukrushpan, 2004ab) and (Pukrushpan,2003) and using standard state value of temperature (291.15K) and the entropy change to some - Δg^0F/2F 2.7 can be written as:

$$E = (1.299 - 0.85)10^{-3}(T_{FC} - 298.15) + 4.3085\,(10^{-5}T_{FC}\,)\,[(\ln(p_{h2}) + \tfrac{1}{2}\ln(P_{O2}))]\ V \quad \text{Eq. (2.8)}$$

Where T_{FC} is expressed in kelvin and P_{H2} and P_{O2} are expressed in atm, considering that the reaction is irreversible and that the process contain losses, the FC voltage is normally less than the value contained in (2.8).These losses intrinsic of the fuel cell are activation, ohmic and concentration losses. (Antonio, 2011).

Table 3 below shows the form of water product in their state, the temperature and the electric potential attributed to them for the open circuit voltage when the resistance is usually high.

Table 3: The open circuit voltage at specific temperatures (Ibrahim M.M et al., 2005)

Form of water product	Temperature, ^{o}C	E_o (V)
Liquid	25	1.23
Liquid	80	1.18
Gas	100	1.17
Gas	200	1.14
Gas	400	1.09
Gas	600	1.04
Gas	800	0.98
Gas	1000	0.92

Assumptions and Parameters for consideration

Some assumptions are made to represent parameters with the reaction process from the point where the chemical reactants hydrogen and oxygen are converted to the relevant products in this case steam in the fuel cell system.

Considerations are also made for the pressure, the channel length(x in meters) and the reaction and resident time which will be represented as 'D'.

Resident and reaction time parameters

D represents a parameter relating to reaction time and resident time. **Reaction time** is defined as the amount of time required to hold up the particles in the batch reactor for the required conversion to take place.

Resident time

This is the time spent by the particles in tubular reactor to reach the desired conversion and to the end of the fuel cell where the by-product of steam comes out.

2.2 Model development

Parameters for free Gibb's energy conversion equation

The flow of all gases is parallel and at 100 ^{o}C. The channel length $0 < x < 1$.In meters.

Assume the feed partial pressures are $P_{H2,in}$ = 1 bar, $P_{O2,in}$ = 0.29 bar, and $P_{H2O,in}$ = 0.1 bar.

D will be as a unit value 1.D=1

The formula for exit hydrogen partial pressure is given as:

$$PH_2 = PH_{2,In}\exp(-DX),$$

Where D =1 and x function value is varied from 0 to 1 meter.

Electrical potential generated for x = 0 and 0.1 will be demonstrated. It should be noted the iterations will be calculated from 0 to 1 for different values of E and will be displayed in tabular form.

Calculations of Governing equations of fuel cell process Gibb's energy conversion equation

Parameters x=?, D=?,PH_2=? $P_{H2,in}$ = 1 bar, $P_{O2,in}$ = 0.29 bar, and $P_{H2O,in}$ = 0.1 =bar. Finally E=?

Assuming D= 1 for all iterations

From table 2.3 at 100°C all gases are parallel, the open circuit voltage is chosen as 1.17 V for all iterations and will be displayed in tabular form.

Illustrated calculation of first iteration of free Gibb's Equation

For x= 0

$PH_2 = PH_{2,In}\exp(-DX)$, (2.9)

$PH_2 = (1)\ 2.718^{((-1)0)} = 1$

E_0= 1.17V

$$E = E_{0+\frac{RT}{2F}} \ln\left[\frac{p_{H2}\,P_{02}^{0.5}}{P_{H2O}}\right] \quad (3.0)$$

$$= 1.17+\frac{8.314Jpermol-k(373k)}{2(964585coulombs)}\left[\ln\left[\frac{1(0.29\text{^}(0.5)}{0.1}\right]\right.$$

=1.197

Illustrated calculation of second iteration of free Gibb's Equation

For x = 0.1 and D= 1, $P_{H2,in}$ = 1,T=100°C=373K

$PH_2 = PH_{2,In}\exp(-DX)$,

PH_2=1* 2.718^(-1(0.1))=0.905bar

$$E= 1.17 + \frac{8.314Jpermol-k(373K)}{2(964585coulombs)}*\ln\left[\frac{0.905(0.29^{0.5})}{0.1}\right]$$

E_1= 1.195V

This pre-design simulation study will result to the equations that will relate Exit Hydrogen Pressure and Electric Potential versus Channel Lengths required in choosing the best fuel cell technology.

In table 4 the parameters for the cell were imputed into equation (2.9) and the exit partial pressure was calculated for different parameters of D and X representing channel length variables. Furthermore, the

partial exit hydrogen pressure was then substituted to the free gibb's equation (3.0) to generate the Electric Potential.

Table 4: Channel length versus exit hydrogen pressure and Electric Potential

S/N	X(Meters)	PH(Bar)	E(Volts)
0	0	1	1.197
1	0.1	0.905	1.195
2	0.2	0.819	1.194
3	0.3	0.741	1.192
4	0.4	0.67	1.191
5	0.5	0.607	1.189
6	0.6	0.549	1.187
7	0.7	0.497	1.186
8	0.8	0.449	1.184
9	0.9	0.407	1.183
1	1	0.368	1.181

3.0 Results and Discussions

3.1 Interpretation of Figures 3 and 42b

Following the generation of the result data in table 4, the exit partial pressure of hydrogen was plotted against the channel length variables. It can be observed from Figures 3 and 4 that the exit partial pressure of the hydrogen gas in the fuel cell drastically reduced polynomially as the channel length increased marching the standard curve. The generated equation for the relationship is as follows

$$PH = 0.3094X^2 - 0.9341X + 0.9962 \quad (3.1)$$

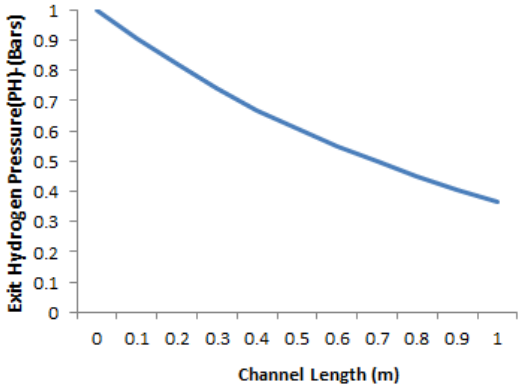

Figure 3: Standard result of graph of partial pressure of hydrogen against channel length in meters

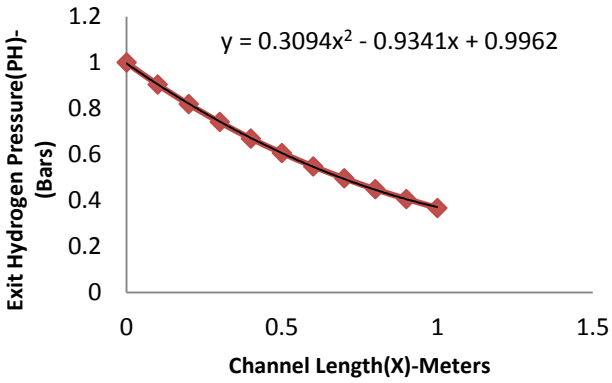

Figure 4: Calculated result of graph of partial pressure of hydrogen against Channel length in meter

3.2 Interpretation of Figures 5 and 6

The results for Electric Potential (E), shown in Table 4, were obtained from equation (3.0) and plotted against channel length variable. The result of the plot (Figure 6) shows that the reduction in channel length leads to the increase in Electric Potential. The curve generated matched the standard curve (Figure 5) behavior. The equation for this curve is:

$$y = -0.0962x^5 + 0.2404x^4 - 0.2088x^3 + 0.0728x^2 - 0.0242x + 1.197 \qquad (3.2)$$

$E = y$; $X = x$

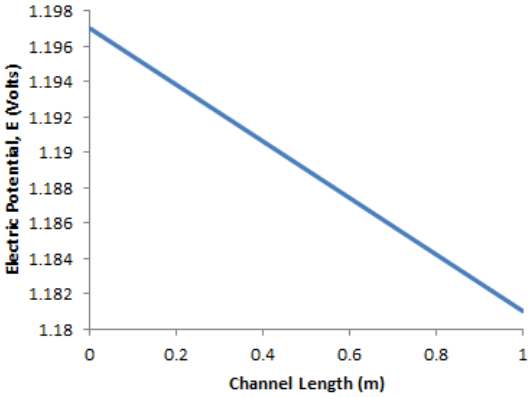

Figure 5: Standard Result of Graph of Electric Potencial E(V) against Channel Length (m)

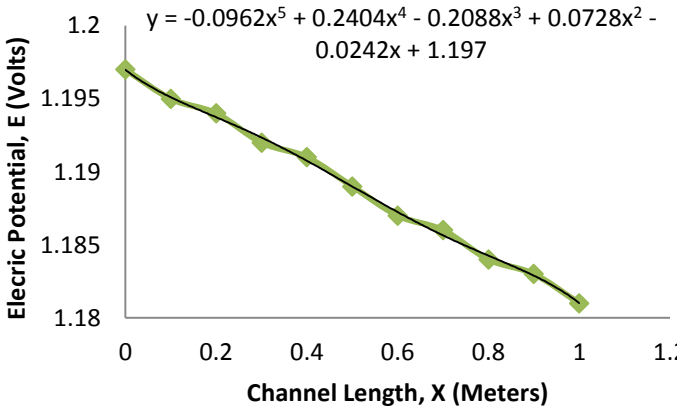

Figure 6: Graph of Calculated Result of Electric Potential E(V) against Channel Length (m)

4.0 Conclusion

It can be concluded from the numerical result analysis of the free Gibb's energy equation in the pre-design and simulation of the Proton Exchange Membrane fuel cell power system (depending on the volume of the fuel), that the channel length should be made as small as possible to have a higher hydrogen partial pressure output with higher electric potential output. The fuel cell should be as compact as possible depending on the scale-up proportion.

5.0 Recommendations

It should be noted that to have a successful experimental demonstration, it is recommended that a simulation software be sourced and be used with different fuel cell specification and input data scenarios in order to generate comparative results that are accurate with minimum errors and risk..

This will make the experimentation stage less cumbersome and expensive, because imputing the theoretical data that should match the experimental result, will give the desired power output.

Probable Solution for the drawback of the PEMFC, knowing that the by-product is water and heat, is to deploy a feed-back system to re-humidify the membrane.

More research can be done to design a sensor to detect low level hydration in the membrane and trigger a switch to re-humidify the membrane from the by product which is water.

References

Antonio S, 2011, Energy management electric systems fed by fuel cell stacks, HAL 6-20, http://americanhistory.si.edu/fuelcells/mc/mcfcmain.htm

Ekin, O., Yilser, D., & Ayhan, A., 2015. Modeling and simulation of a hybrid photo-voltaic (PV) Module-electrolyzer-PEM Fuel cell system for micro-generation application, International Journal of Hydrogen Energy, 1-7,July 2015 accessed 18th November, 2016.

Ibrahim M.M, Rajnish k., Ali Rashid, 2005"Modelling and Examining Open circuit voltage for PEM Fuel cells "sustainable energy Technology center, University of Hertfordshire, Hatfield, United Kingdom school of Engineering & Technology Centre, University of Hertfordshire, Hartfield ,United Kingdom

Koraishy, & Babar.2009,,Manufacturing of membrane electrode assemblies for fuel cells (PDF). 6.2.1: Singapore University of Technology and Design, 9.

Larminie J, Dicks A, 2003. Fuel Cell Systems Explained. John Wiley & Sons, Ltd.

Nice, Karim, & Strickland, J. 2011. How Fuel Cells Work: Polymer Exchange Membrane Fuel Cells, How Stuff Works, accessed.

Nirmal. 2014., Development in Direct Methanol – Oxygen Fuel Cell (DMFC), *IOSR Journal of Applied Chemistry (IOSR-JAC) e-ISSN: 2278-5736.Volume 7, Issue 9 Ver. II. 24-26.*

Pukrushpan J.T, Stefanopoulou A.G, and Peng H, 2004 ,.Control of fuel cell breathing, IEEE Control Systems Magazine, 24, 30–46.

Pukrushpan J.T, Peng H, and Stefanopoulou A.G, 2004.,Control-oriented modeling and analysis for automotive fuel cell systems, Journal of Dynamic Systems, Measurement, and Control, 126:1, 14–25.

Pukrushpan J.T , 2003., Modeling and Control of Fuel Cell Systems and Fuel Pro-cessors., PhD thesis, University of Michigan.

Smithsonian institution. 2009. http://americanhistory.si.edu/fuelcells/alk/alkmain.htm
Stephen, C. ,2004., http://www.google.com/patents/US20040096728

Thomas E.D, Jennifer E R, 2007. Pathways to Hydrogen Future, Elsevier Linacre House, Jordan Hill, Oxford ox28dp,UK; 8-32.

Wikipedia, 2017. Proton Exchange Membrane fuel cell, accessed 24th February 2017.

Ibrahim M.M, Rajnish k., Ali Rashid, 2005"Modelling and Examining Open circuit voltage for PEM Fuel cells "sustainable energy Technology center, University of Hertfordshire, Hatfield,

United Kingdom school of Engineering & Technology Centre, University of Hertfordshire, Hartfield, United Kingdom.