JOURNAL OF ENGINEERING AND APPLIED SCIENCES

JEAS Journal of Engineering and Applied Sciences 11 (2016-2017)

Smart Meters and Advanced Metering Infrastructure: Panacea to Nigeria's Energy Billing and Monitoring Problem

Aniedu A. N[1*], Inyiama H. C[2] and Azubogu A.C.O[3]
[1,2,3]Electronic and Computer Engineering, Nnamdi Azikiwe University, Awka
[*] an.aniedu@unizik.edu.ng

Abstract
Smart metering is a major development in utility industries today especially the electricity industries. However, many benefits of smart metering have not been fully explored due to the limited functions of many installed prepaid meters in most developing countries including Nigeria. There is therefore the increasing focus on how prepaid meters can be aided to stay online through a network of Mobile Communication Infrastructure available in most developing countries. This paper discusses the basic benefits of the application of smart meters and Advanced Metering Infrastructure (AMI) towards solving electric energy billing and monitoring problems in Nigeria. Also described is a preliminary design of Smart Energy Meter which was achieved using the following off-the-shelf components: Atmel microcontroller as the main controller for evaluating consumed electric power and Power Factor (PF), an ADE7756 metering IC for voltage and current transforming, a GSM module used for communicating to Management and Monitoring Module, and an LCD for displaying the root mean square (rms) values of voltage and current, consumed electric power, and PF.

Keywords: Smart meters, GSM module, Advanced Metering Infrastructure (AMI)

1.1 Introduction

Monitoring of usage of utilities (including water, gas, electricity etc) and reducing wastage and theft has always been an issue of top priority to utility companies, both in developing and in well developed countries. Another major problem in electric power systems management is the acquisition of electricity usage data and billing of utilized energy. Before the introduction of prepaid meters in many developing countries including Nigeria, staff of

the electricity distribution company often have to go round, house by house to take energy readings of users' meters in order to be able to compute their monthly bill. To this effect, the official gazettes of the Federal Government of 24th December 2007 (Federal Republic of Nigeria Official Gazette, 2007) and 1st August 2012 (Federal Republic of Nigeria Official Gazette, 2012) among others, stipulate the methodology for estimated billing and manual meter reading of consumer's energy meters. Even with the introduction of the prepaid meter, users have to travel to designated locations to buy tokens (a twenty digit number in which the amount of energy purchased is encrypted) and take this back to their meter for activation (whether the meter is the keypad type or the smartcard type).

The issue of theft/vandalism is another major problem to contend with. Energy distribution companies have had to part with billions of Naira to vandals and fraudsters due to theft, illegal generation and sale of tokens, fraudulent diversion of collected funds by staff and so on. But among all these, energy theft has been the most difficult to contend with, especially in emerging economies. A World Bank report showed that up to 50% of electricity in developing countries is acquired through theft (Antmann, 2009). It is reported that each year over 6 billion dollars are lost due to energy theft in the United States alone (McDaniel & McLaughlin, 2009). In Canada, BC Hydro reports 100 million dollars in losses every year (CBC News, 2010). Utility companies in India and Brazil incur losses around 4.5 billion and 5 billion dollars due to electricity theft respectively (Ministry of Power, India, 2013), (Federal Court of Audit, Brazil, 2007). This creates a lot of avoidable losses in the system which affects the quality and amount of electricity supplied, and the bill imposed on genuine customers.

The national coordinator liaison unit of PHCN Alhaji Shuaibu Maigida speaking during the launch of an online mode of payment known as "PHCN easy payment solution" noted that PHCN customers are subjected to discomfort while trying to pay their energy bills including distance of payment centers to place of work /residence, long queues in cash offices, non-crediting of payments, disconnection as a result of delays in reflecting of payments. Others are delays in remittance of collections by banks to PHCN accounts, which results in unnecessary overdrafts and wrong capturing of payments at the billing centers. These hiccups promote apathy in paying of electricity bills by consumers resulting to huge revenue losses to the company (Guardian Newspaper, 2006).

The introduction of prepaid meter was intended to, among other things check the issue of energy theft and nonpayment or underpayment of energy bills. The prepaid energy meter is designed in such a way that the meters can only supply energy to the user for as long as there is energy credit unit remaining in the user's meter; once the unit expires, the meter cuts off energy supply to user, thus enforcing a 'pay-as-you-use' policy.

The effective operation of the electricity metering system and the vending of token in prepaid electricity market is essential to the success of the electricity distribution companies. The system currently in use is called the Common Vending System (CVS). This system has a number of shortfalls mostly due to the fact that it is an off-line system; there are devices

present in the field that are independently capable of producing tokens that represent electricity credit and there is no real-time monitoring of the energy meters installed at customer premises.

In order to surmount these problems, the architecture of the common vending system has to be changed from off-line, semi-independent systems to a fully integrated online system. Devices that are capable of generating tokens are not required to be present in the field and direct communication of the meters and the servers will ensure that proper monitoring is done by the utility on general use and practice.

Planned system of energy meter reading and monitoring will provide a means for the distribution company to monitor consumer's energy meter and provide proper reporting to the control center and thus prevent much of the above mentioned issues. This can only be achieved using smart meters riding on a properly designed metering infrastructure – the Advanced Metering Infrastructure (AMI).

2.0 Review of Related Literatures

2.1 The Prevalent Technology – The Prepaid Meters

In Nigeria today, as in most developing countries, the electronic prepaid meters are taking over from the electromechanical meters. The concept of prepaid electricity operates in virtually the same way as that of the GSM services. In other words, the customer pays upfront for energy before consumption. Much like that of the GSM technology, the energy consumption is controlled at the consumers premise through a prepaid meter on which is loaded an afore purchased electricity credit and continues to dispense electric service to the consumer until the purchased credit depletes, after which electric dispensing is cut off.

The typical prepayment system in use consists of the following components

- The Credit Dispensing Unit (CDU) or Vending Unit
- The encrypted credit transfer token
- The Prepaid meter (or Electricity Dispenser, ED)
- A management information system, MIS (optional)

The prepaid electricity setup operates in the following manner: the prepaid meter is installed in the premise of the customer to control the amount of electricity provided to the customer. The customer then purchases an encrypted credit transfer token from a credit dispensing unit. The token represents the amount of electricity that the customer has paid for. This token is then inputted into the ED to provide electricity to the customer. Where the MIS exists, it interfaces with the CDU periodically for the management of the token generator and for accounting purposes (see Figure 1).

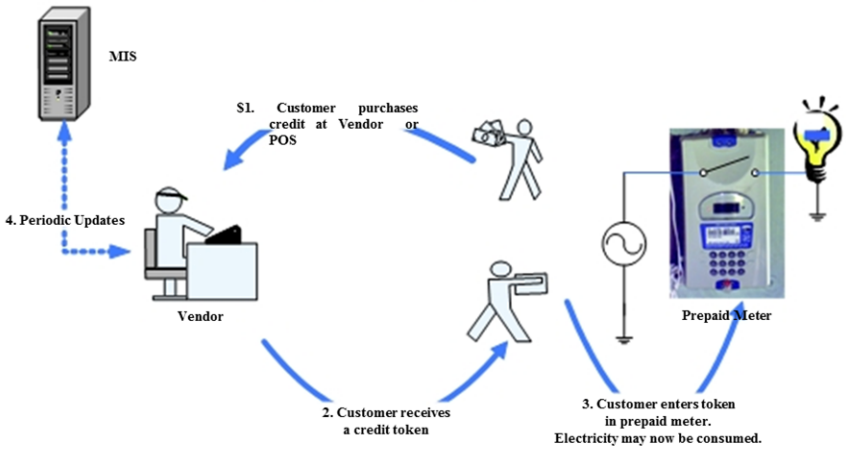

Figure 1: Generic Electricity Prepayment System

However, inasmuch as this system surmounts a major disadvantage of the erstwhile electromagnetic meters, (whose major disadvantage is that the utility company must physically travel to the customer premise in order to take energy reading for bill computation, and where the customer refuses to pay his bills, must also go and physically disconnect the customer from the grid to ensure he does not have power to his premise), it does not provide flexibility in billing, nor does it enable utility companies to effectively monitor and manage the customer's energy meter and utilized energy.

2.2 Smart Meters

Smart meters are meters equipped with additional features, apart from basic metering. These features include ability to communicate with other meters or concentrators using either wired or wireless technologies, ability to monitor and control energy usage by home appliances, capability for remote monitoring and management (disconnection, reconnection, credit recharge etc) Smart meters have the ability to measure readings of energy usage and send it to utility control center through different techniques and protocols. Some of these techniques/protocols include Bluetooth for Home Area Networks (HAN) which employ the IEEE 802.15.1 protocol, Broadband Power Line communication (BPL) employing TCP/IP over radio frequency spectrum, Wi-Fi or WiMAX technology employing the 802.11a/b/g/n standard. Other techniques include protocols like ZigBee network employing the 802.15.4 standard, the Global system for Mobile Communication (GSM), the General Packet Radio Service (GPRS) etc.

Several researchers and authors have attempted to propose a model for smart meters. Some of them are reviewed below.

Sudheer and co (Sudheer & et al, 2013) proposed the development of an equipment using a PIC16f887A microcontroller and a GSM module to enhance existing electromechanical meter's ability towards communication, exchange of usage data and tracking of energy theft by calculating stolen energy. This system's monitoring capability was limited and applied majorly to theft detection.

Sebola and Penzhorn (Sebola & Penzhorn, 2003), in researching against prevention of vending fraud, designed a secure mobile commerce system for vending of prepaid electricity token which they called m-commerce. This system however required users to manually input generated tokens into the prepaid meter.

In their work 'A prepaid meter using mobile communication', Jain A. and Bagree M. (Jain & Bagree, 2011) modelled a prepaid card which was embedded into existing prepaid meter. This card incorporates a mobile wireless communication module to enhance communication between the meter and utility companies, hence making the meter smarter.

Raza A. et al (Raza & et al, 2013) in their work 'online monitoring of electricity data through wireless transmission using radio frequency' designed an energy meter possessing telemetry capabilities using ATmega32L and ATmega8L microcontrollers, PT2262 encoder and PT2272 decoder and interfacing it to the computer serial port through MAX232 and DB9. They were able to perform remote monitoring and collection of electricity usage data which was the primary purpose of that research work.

Actaris Metering Systems (Actaris Metering System, 2005) in a publication titled 'wireless data communication solution for prepayment meters' described an award winning innovation of an RF device which was connected to back of a standard transfer specification (STS) compliant meter. This device named ACE9000 InfoPOD was then interfaced to a handheld unit having an RF master transceiver unit to enhance communication between it and the InfoPOD. This enabled utility workers to take energy reading and meter functionality check without requiring physical access to the meters. This setup however still required that the worker move round block by block with the handheld device in order to take energy readings as the transmission distance of the InfoPOD was very limited.

In the work 'Development of a smart power meter for AMI based on ZigBee Communication', Shang-Wen (Shang-Wen & et al, 2009) and his colleagues developed a smart power meter based on ZigBee network for energy meter reading and data communication.

2.3 Advanced Metering Infrastructure (AMI)

The Advanced Metering Infrastructure (AMI) is a hierarchical structure and comprise of a number of different networks communicating with each other as shown in figure 2.

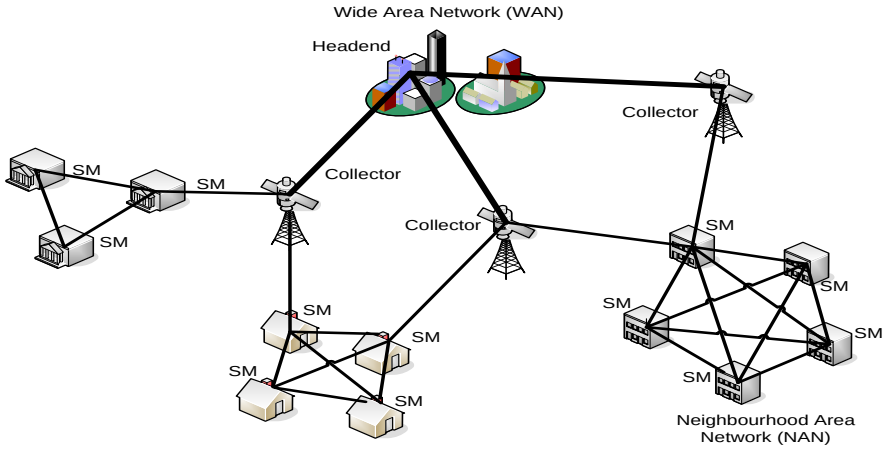

Figure 1: A simple AMI architecture (Source: Rong & et al, 2004)

According to Electric Power Research Institute (EPRI) (Electric Power Research Institute, 2007), it comprise of state-of-the-art electronic/digital hardware and software, which combine interval data measurement with continuously available remote communications, and enable measurement of detailed, time-based information and frequent collection and transmittal of such information to various parties. Accordingly, AMI typically refers to the full measurement and collection system that includes meters at the customer site, communication networks between the customer and a service provider, and data reception and management system that make the information available to the service provider. AMI modernizes the electricity metering system by replacing old mechanical meters with smart meters, which provide two-way communications between utility companies and energy customers (Rong & et al, 2004).

AMI technologies are rapidly overtaking the traditional meter reading technologies and millions of smart meters are equipped in the household all over the world (Rong & et al, 2004). For example, there are already more than 4.7 million smart meters used for billing and other purposes in Ontario, Canada (GSM Association, 2014). According to the American Institute for Electric Efficiency (IEE), approximately 36 million smart meters had been installed in the United State by May 2012, and additional 30 million smart meters will be deployed in the next three years (Wikipedia, 2014).

Table 1 shows comparism between the basic features of a manual metering technology and an Advanced Metering Infrastructure

Table 1: Comparison of Manual Metering Technology with AMI (Source: King, 2004)

System Element/Feature	Manual	Advanced Metering Infrastructure
Meters	Electromechanical	Hybrid or solid-state
Data collection	Manual, monthly	Remote via communication network, daily or more often
Data recording	Total consumption	Time-based (usage each hour or more often)

Primary application	Total consumption billing	Pricing options, customer options, utility operations, emergency demand response
Key software interfaces	Billing and customer information system	Billing and customer information system, customer data display, outage management, emergency demand response
Additional devices enabled (but not included in base infrastructure)	None	Smart thermostats, in-home displays, appliance controllers

Some of the key benefits of AMI over conventional meters as identified by Chris King (King, 2004) include:

- Choice of billing date
- No estimated bills
- Projected month-end bill
- Choice of flat rates or dynamic pricing
- Automatic response and restoration verification by utilities
- Real-time meter readings
- First call problem resolution
- Web data access
- Monthly detailed usage reports
- Baseline threshold alarms
- Month-to-date usage
- Daily or hourly data for customer education

3.0 System Integration and Implementation

3.1 Requirement Analysis

As stated earlier, much research is ongoing into making meters smart and, at the same time, keeping the price of these meters affordable for the general public.

However, a feasible approach towards solving the menace of energy billing as put forward in the proceeding paragraphs must put in consideration the level of infrastructural development of the country under consideration. As it is with many other developing countries, Nigeria already has a wide spread coverage of GSM and CDMA network and this is continually being expanded daily. Other communication technologies like Wi-Fi, WiMAX, ZigBee, or even Broadband Power Line (BPL) are yet in their infant stages, especially in rural communities and will not be an effective communication means for proposed smart meters.

In view of this therefore, this research focused on the development of smart meters using GSM/CDMA technology, but will also give room for expansion to Wi-Fi which is the next best thing as it is fast gaining popularity in most cities of Nigeria. Figure 3 shows the systems architecture of the proposed smart metering infrastructure which comprise of three basic units viz: the Cellular Communication Based Smart Meter (CBSM), the Management &

Monitoring Module (M&MM also called AutoVend) and the Customer Access Module (CAM). The CBSM is basically hardware based whereas the M&MM and the CAM are software for monitoring and/or accessing the CBSM.

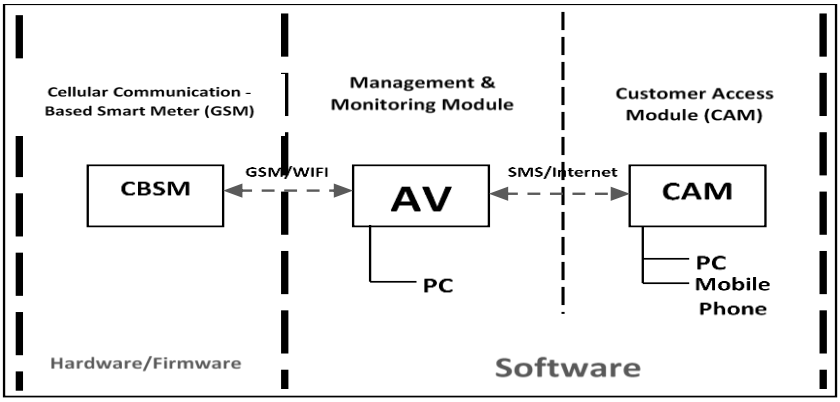

Figure 2: System Architecture

3.2 Systems Design

The CBSM comprises majorly of the metering unit (designed with the metering IC ADE7756), the communication unit (comprising of the MAX232 IC and the GSM module), the display unit, and the control unit which was implemented using the AT89C52 microcontroller. The choice of the components were necessitated by the need to produce the device using easily accessible and available components while maintaining quality and standard. Figure 4 shows a block diagram of the CBSM section.

The metering unit is responsible for measuring the amount of load connected to the meter and forwarding it to the processing system for the necessary computation to be done with it. The metering unit uses a Voltage and Current Sensor connected to an Energy Metering Unit (EMU) to measure average, active and real power. The core of the metering unit is a metering IC–ADE7756 (Figure 4);

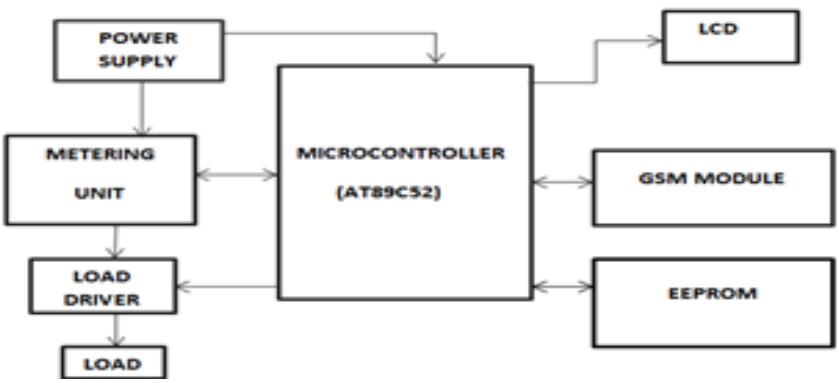

Figure 3: Block diagram of Cellular Communication Based Smart Meter

The ADE7756 is a high-accuracy electrical power measurement IC with a serial interface and a pulse output. The ADE7756 incorporates two second-order sigma-delta ADCs, reference circuitry, temperature sensor, and all the signal processing required to perform active power and energy measurement. It achieves the integration of the Active Power signal by continuously accumulating the Active Power signal in the 40-bit Active Energy register. This discrete time accumulation or summation is equivalent to integration in continuous time. Equation (1) expresses the relationship.

$$E = \int P(t)dt = \lim_{T=0}\{\sum_{n=0}^{\infty} P(nT) \times T\} \quad (1)$$

Where n is the discrete time sample number and T is the sample period.
The ADE7756 contains a sampled Waveform register and an Active Energy register capable of holding at least five seconds of accumulated power at full load. Data is read from the ADE7756 via the serial interface.
The error associated with the energy measurement made by the ADE7756 is defined by the following formula:

$$Percentage\ error = (\frac{Energy\ registered\ by\ ADE7756 - True\ energy}{True\ energy} \times 100\%) \quad (2)$$

The communication unit was achieved by the use of GSM Module coupled with a Microcontroller using MAX232 to send and receive information.
The MAX232 device is a dual driver/receiver that includes a capacitive voltage generator using four capacitors to supply TIA/EIA-232-F voltage levels from a single 5-V supply. Each receiver converts TIA/EIA-232-F inputs to 5-V TTL/CMOS levels.
To interface the GSM modem to the AT89C52 microcontroller, it is required that the transmit and receive pins be inversely connected to each other through the MAX232 IC which is also a voltage converter circuit. By inversely, it means that the RXD pin of the microcontroller connect with the TXD pin of the GSM module and the TXD pin of the microcontroller connect with the RXD pin of the GSM module. Only the RXD and TXD pins are needed to send message, to receive message, to make call and to receive call on GSM module through the microcontroller. The microcontroller uses AT commands to control the GSM Module.
The display unit used for the design was the Liquid Crystal Display (LCD) because of its ability to display numbers, character, and graphics, the ease of programming for characters and graphics and low power consumption. Figure 4 shows the LCD and its interface with the microcontroller. The hardware design involves all the components and tools used to design the smart energy metering System. There are five Units involved in the hardware design stage; power supply unit, Input unit (Metering Unit), Processing unit, output stage and communication unit. Figure 5 shows a Proteus/Simulink rendering of overall design stages.

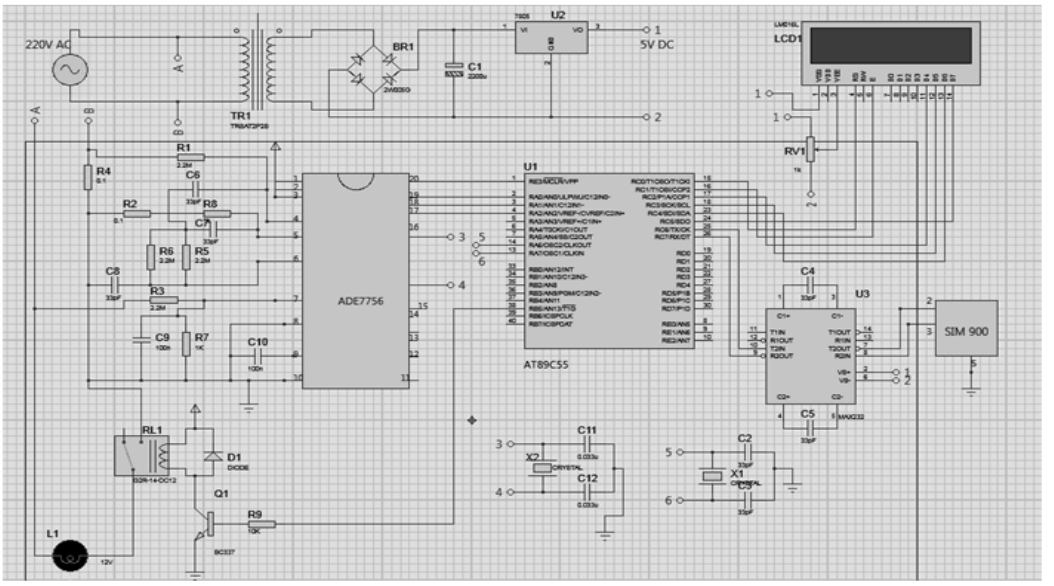

Figure 4: Proteus/Simulink Design of the CBSM

4.0 System Integration and Implementation

Figure 6a shows a picture of the coupled device during operation, and in figure 6b, the display of the meter is seen showing current load and the remaining energy credit unit.

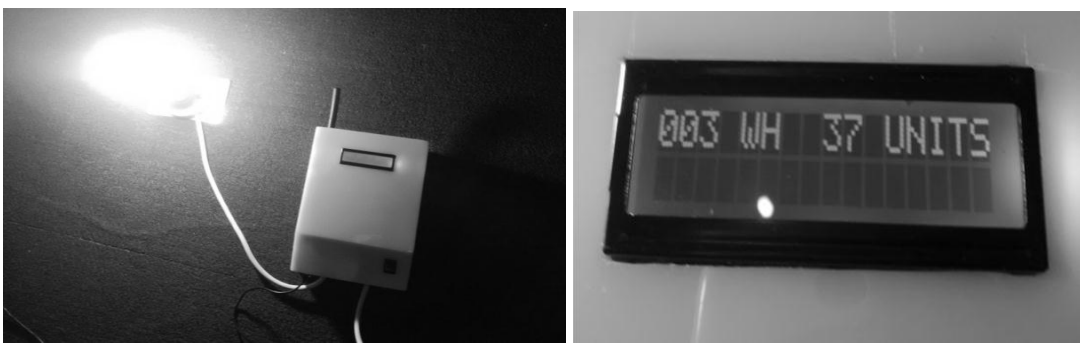

Figure 6: (a) complete view of the system (b) LCD view of the system showing current load and remaining energy credit unit.

At each of these instances, the user mobile numbers that had been programmed in the microcontroller during the software design stage received the pre-configured message, informing the meter owner of an action taking place in the meter (figure 7).

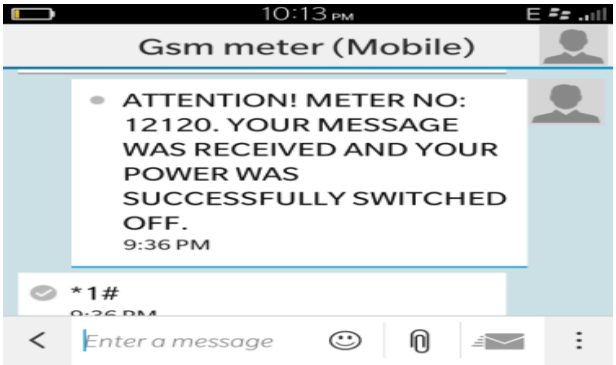

Figure 7: Snapshot of the received message during testing

In order to achieve the intended result of remote monitoring and control of the meters, hence maximizing the potentials of the smart meters, each meter installed in the customer premise is made to 'talk' to a Monitoring and Management Module through the GSM/Cellular network infrastructure. The M&MM was designed such that it has the ability to monitor and collect data periodically from each of the smart meters, store these data and analyze these information for useful patterns in the energy utilization of the customers. Figure 8 shows a typical GSM-based Advance Metering Infrastructure.

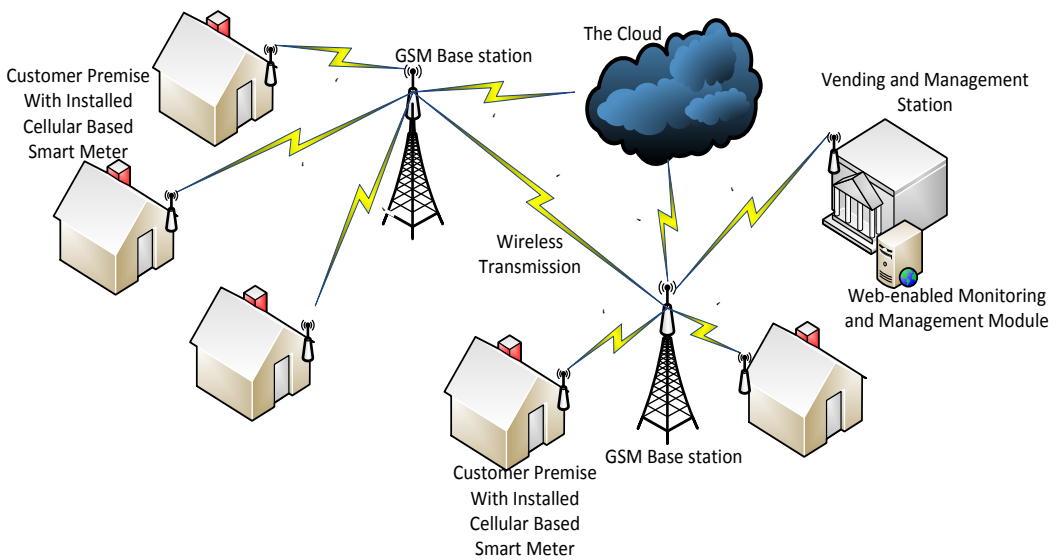

Figure 8: GSM-based Advanced Metering Infrastructure

4.0. Conclusion

It has become quite obvious that though the introduction of prepaid meters assisted in solving some issues inherent in the electricity energy billing and monitoring procedure obtainable using the electromechanical meters, it is grossly deficient in adequately addressing other pressing problems like advanced billing, remote monitoring and control, tackling of energy theft etc.

Hence, this work describes the design and development of Smart Energy metering system and Advance Metering Infrastructure as a perceived solution to these issues. One of the main achievements of this paper is the development, using local and available materials, of smart energy meters. This makes it to be an economical alternative to its more expensive counterparts in the market. It also employs the utilization of a communication channel (GSM) which has the most spread especially in developing countries like Nigeria, thus not requiring an additional setting up of communication infrastructures as is the case with other communication channels like Zigbee, Wifi, and PLC etc. It also provides an easy and convenient way of acquiring meter readings (Automatic meter readings) hence ensuring accuracy, lower operational cost and removal of possible corruption and fraud related to meter reading and revenue collection.

References

Actaris Metering Systems, 2005. *Wirelss data communication solution for prepayment meters.* [Online]

Available at: http://www.ee.co.za/wp-content/uploads/legacy/Ditrib%201.pdf

[Accessed 8 July 2014].

Antmann, P., 2009. *Reducing technical and non-technical losses in the power sector.* Washington, DC, USA, The World Bank.

CBC News, 2010. *Electricity theft by B.C. grow-ops costs $100m a year.* [Online]

Available at: http://www.cbc.ca/news/canada/britishcolumbia/electricity-theft-by-b-c-grow-ops-cost-ayear-1.969837

[Accessed November 2014].

Electric Power Research Institute, 2007. *Advanced Metering Infrastructure (AMI).* [Online]

Available at: https://www.ferc.govt/EventCalender/Files/20070423091846-EPRI%20-

%20Advanced%20Metering.pdf
[Accessed November 2014].

Federal Court of Audit, Brazil, 2007. *Operational audit report held in national agency of electrical energy*, Aneel, Brazil: s.n.

Federal Republic of Nigeria Official Gazette, 2007. *Nigerian Electricity Regulatory Commission's Meter Reading, Billing, Cash Collection and Credit Management for Electricity Supplies Regulations.* [Online]
Available at: www.nigerianelectricityprivatization.com/?page_id=152
[Accessed 23 April 2014].

Federal Republic of Nigeria Official Gazette, 2012. *Nigerian Electricity Regulatory Commission(Methodology for Estimated Billing) Regulation.* [Online]
Available at: www.nigerianelectricityprivatization.com/?page_id=152
[Accessed 23 April 2014].

GSM Association, 2010. *Market Data Summary*. [Online]
Available at: http://www.gsmworld.com/newsroom/marketdata/market_data_summary.htm
[Accessed November 2014].

Guardian, 2006. *PHCN and Banks Introduce Online Electricity Payments*, [Online].
Available: https://www.proshareng.com/articles/Opinion-&-Analysis/PHCN-and-banks-introduce-online-electricity-payments/762. [Accessed 23 April 2014].

Jain, A. & Bagree, M., 2011. A Prepaid Meter Using Mobile Communication. *International Journal of Engineering Science and Technology*, 3(3), pp. 160-166.

King, C., 2004. *Advanced Metering Infrastructure (AMI): Overview of system features and capabilities,* U.S: s.n.

McDaniel, P. & McLaughlin, S., 2009. Security and privacy challenges in the smart grid. *IEE Security and Privacy,* pp. Vol. 7, no. 3, pp 75-77.

Ministry of Power, India, 2013. *Overview of power distribution.* [Online]
Available at: http://www.powermin.nic.in
[Accessed November 2014].

Raza, A. & etal, 2013. Online monitoring of electricity data through wireless transmission using radio frequency. *International Journal of Innovtion and Applied Studies,* 3(1), pp. 5-67.

Rong, J. & etal, 2004. Energy-theft detection issues for advanced metering infrastructure in smart grid. *Tsinghua Science and Technology,* April, 19(2), pp. 105-120.

Sebola, L. & Penzhorn, W., 2003. *A Secure Mobile Commerce System for the Vending of Prepaid Electricity Tokens.* Pretoria, Satnac.

Shang-Wen, L. & al., e., 2009. *Development of a smart power meter for AMI based on ZigBee communication.* Taipei, IEEE, pp. 661-665.

Sudheer, K. & etal, 2013. Equipment for Anti-Electricity Stealing with Remote Monitoring. *International Journal of Engineering Research and Applications,* 1(2), pp. 241-245.

Wikipedia, the online encyclopedia, 2014. *Subscriber Identity Module.* [Online]
Available at: http://en.wikipedia.org.
http://en.wikipedia.org/wiki/Subscriber_identity_module.
[Accessed November 2014].