Unizik Journal of Technology, Production and Mechanical Systems (UJTPMS)

journal homepage: https://journals.unizik.edu.ng/index.php/ujtpms/about

Design of a prototype digital water level controller using ultrasonic sensor interfaced microcontroller

Sylvester E. Abonyi[1], Paul C. Okolie[2], Anthony A. Okafor[2], Chinagorom E. Nawdike[2]

[1]Department of Electrical Engineering, Nnamdi Azikiwe University Awka, Anambra State, Nigeria.
[2]Department off Mechanical Engineering, Nnamdi Azikiwe University Awka, Anambra State, Nigeria.

ARTICLE INFO

Article history:
Received Dec. 9, 2022
Revised Jan. 8, 2022
Accepted Feb. 9, 2023

Available online Feb. 22, 2023

Keywords:
Ultrasonic sensor, microcontroller, electric pumping machine, PVC, discharge

ABSTRACT

This work designed and fabricated a prototype digital water level controller using ultrasonic sensor interfaced with microcontroller. The supply and overhead tanks were designed and fabricated with fiber glass of thickness 5mm. The electric pump was selected based on the capacity of the overhead tanks and its distance from the supply source. Polyvinyl Chloride (PVC) pipes were selected based on its carbon content, low cost, chemical resistance and ease of joining. The electronic circuit was designed and built using ultrasonic sensor, microcontroller, transistors and relays. Result obtained on testing shows that the controller regulates the ON and OFF of the pump depending on the water levels in the overhead tank. At the highest discharge level of the electric pumping machine which was 900m, the efficiency of the sensor response was found to be 88.9%. This shows that a good result was on the prototype design.

1. Introduction

Regulation of water pumped into a reservoir is very important to every home, offices, laboratories, and industries. Extraction of underground water to meet the unlimited demand for water is prevalent in recent time. To achieve this, there is need for an overhead tank or reservoir to store the water extracted from the underground water. Also, an electric pumping machine that pumps water into the overhead tank is also needed. The introduction of digital level water controller will eliminate or reduce the problems associated with manually operated water pumping system. The integration of sensors to monitor and control the pump and water reservoir tank refilling system will drastically reduce human contact and interactions with the operating system hence eliminate human error. Thus, this work was designed with an ultrasonic monitoring sensor to make the system a stand-alone unit that regulates the water pumping system into the reservoir.

Water is absolutely necessary element of life. The availability of water has played a key role in the development of all civilizations. In the ancient times, water scarcity prevented the development of settlements areas, Lack of available water contributes to search for water, saving water and lifting water to a height for its easy usage was carried out by [1, 2] The need to improve agricultural produce to work on automatic control of agricultural pumps based on soil moisture sensing in the work they tried to reduce human effort irrigation system [3]. Research on the implementation of a microcontroller-based water level control system for domestic and laboratory application was investigated by [4]. This aided the technologist in the laboratory not run out water in course of carrying out their work in the laboratory.

Sai [5] developed automated smart water level indicator for smart irrigation. This is meant to indicate only the water level and has nothing to do with the distance of the water source to the irrigated farm. The need to monitor the delivery of water from the source to the destination was investigated. They designed a monitoring system automatic water level reservoir controller. In his work he did not consider the capacity of the pumping machine, which led to the system not being efficient. [6, 7] worked on microcontroller-based water level indicator and controller. This work was good but failed to take into consideration to synchronize the work as the indicator was giving a wrong figure most of the time. Automatic control of a Pumping System for Water Level using Microcontroller and LabView was also carried out to find out the effect of microcontroller in controlling pumping machine

*Corresponding author: s.abonyi@unizik.edu.ng

and urban water supply [8, 9]. Hence the digital water level controller using ultrasonic sensor interfaced with a micro-controller was able to indicate the volume of water in the reservoir tank at all times. Also pumping machine was characterized to ensure it delivers the quantity of water need with respect to time.

2.0 Methodology and Design Analysis

2.1 Methodology

A prototyping method was used in the research work. This method is a developmental process including assumptions, values, and conditions that the researcher should carry out for analyzing the data. The reason for choosing this method is that it has the ability to update and edit the previous steps of the method as presented by [10, 11] and shown in figure 1.

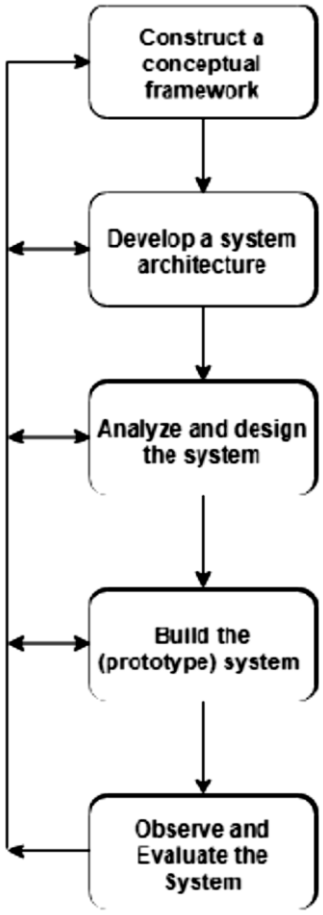

Figure 1. A Process for Systems Development Research [10]

Detailed design drawings were initially done manually to develop dimensions thereafter Solid Works was used to develop standard drawings. The drawing was analyzed using Anysis; a software that has proved highly effective at reducing final manufacturing cost and optimizing product performance. Figure 2 shows the block diagram of a closed loop automatic system

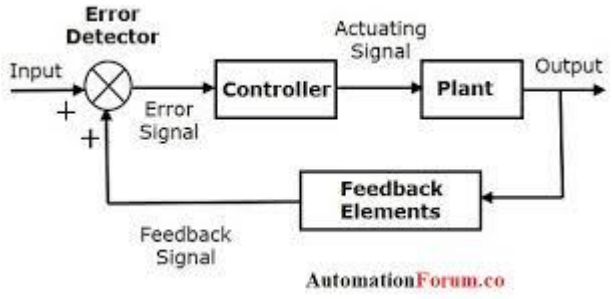

Figure 2 Block diagram of a closed loop automatic system [12]

2.2 Design Analysis

The components were selected with the intent to reduce cost and still maintain standard. The components of the system are grouped into the following units:

1. The reservoirs
2. The frame.
3. Pipe, valves and pipe fittings
4. The pump
5. The power supply unit
6. The sensors
7. The control and display unit

Figure 3 shows the design diagram of the digital water level controller.

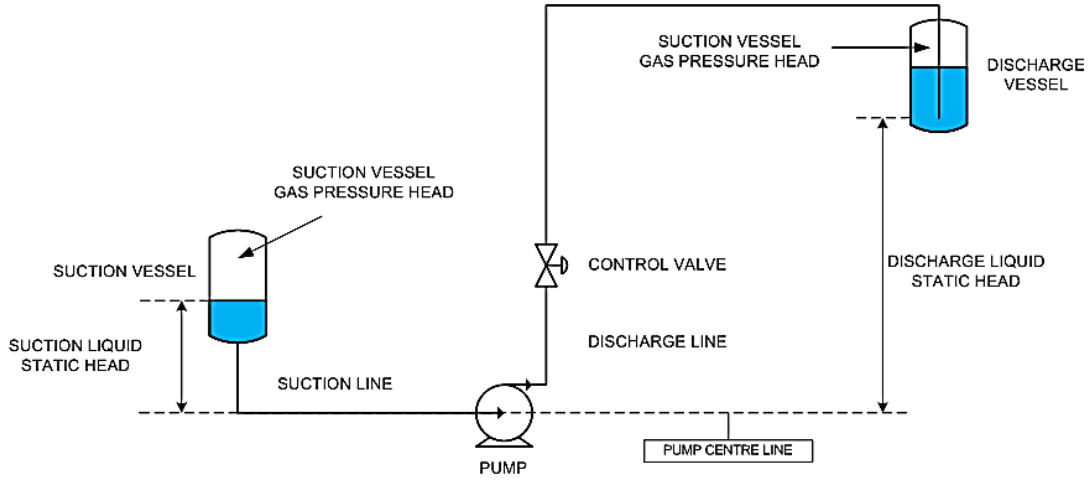

Figure 3 Design diagram of the digital water level controller.

2.2.1. Reservoirs

Two reservoirs which serve as source tank and the overhead tank, were constructed using fiber glass material of 5mm thickness. The fiber glass is a form of reinforced plastic, otherwise known as glass reinforced plastic or glass fiber reinforced plastics. It is light weight, strong and less brittle. This material was chosen to give an optimum result based on the design considerations. The glass sheet is cut into dimensions to give desired volume of the reservoirs and to obtain a uniform cross section through each of the tanks.

Dimensions for overhead tank: Length= 300mm, Width= 300mm and
Height= 1000mm. Volume = 300mm×300mm×1000mm = 90,000,000mm^3 = 900liters.
Dimensions for source tank: Length=400mm, Width=400mm, Height= 700mm.
Volume= 400mm×400mm×700mm = 112,000,000mm^3 = 112liters.

The volume of water to be contained in the tank will fill to 600mm height, i.e. 64litres, in order to allow some clearance in the tank to avoid overflow, while overhead tank will be filled to 500mm height i.e. 45litres and the level sensors for placed at a height of 100mm and 500mm respectively. The fiber glass sheets are cut into box shape and the glued using acrylic gum to avoid leakages.

2.2.2 Hydrostatic pressure in the reservoirs

When a liquid is at rest (i.e. not flowing), its pressure at a given depth can be determined. This is known as 'hydrostatics. Hydrostatic pressure or the pressure a fluid exerts at equilibrium at a certain point in the fluid due to gravity increase at lower depths as the fluid can exert more force from the liquid above that point.
The hydrostatic pressure of a liquid in a tank as force per unit area of the bottom of the tank as given by

$$P = \frac{F}{A} \quad (1)$$

Where: P= pressure F= force A= area

In this case, force will be the weight the liquid exerts on the bottom of the tank due to gravity. If the acceleration and mass is known, the force can be given as:

$$F = ma \quad (2)$$

Pressure can also be given in terms of density, gravity and height as

$$P = \rho g h \quad (3)$$

Where: ρ = density of liquid (water) g = acceleration due to gravity h = height of liquid

As regards the design of reservoir described above, it is important to calculate the pressure exerted by the liquid in order to know if the designed reservoir can withstand this pressure on its walls and how its joints will react relative to the pressure.

If the pressure exerted by the liquid at rest at a given depth is as stated in equation (3.3) and the pressure exerted by the air above is as P_0, then the total pressure in the reservoir is given as:

$$P = P_0 + \rho g h \quad (4)$$

Where P_0 = atmospheric pressure = 101325Pa
Maximum hydrostatic pressure for overhead tank:
If:$\rho = 1000kg/m^3$, $g = 9.81m/s^2$, $h = 0.5m$, and $P_{0=}$ 101325Pa
Then;

P= 101325Pa + (1000×9.81×0.5) Pa
= 101325Pa + 4905Pa
= 110730Pa

Maximum hydrostatic pressure for source tank:
If:$\rho = 1000kg/m^3$, $g = 9.81m/s^2$, $h = 0.4m$, and $P_{0=}$ 101325Pa
Then;

P= 101325Pa + (1000×9.81×0.4) Pa
= 101325Pa + 3924Pa
= 105249Pa

2.2.3 The Frame

Having designed the two reservoirs for the system, the frame dimensions can readily be determined as well as carry out structural analysis. The frame is to be made of mild steel of about 2mm-3mm thickness in order to be able to withstand the vibration that will be caused by the pump. To ensure that the frame dimensions are not over spaced (over design), nor under spaced either, the position of the two tanks and pipes connections were considered. The two tanks are to be placed to have a height difference of 700mm and placed at 100mm apart. The frame is thus dimensioned, height= 1350mm, length= 900mm, width = 500mm. Wheels are attached to the frame to aid moving it to different positions without being lifted from the ground

2.2.4 Pipe and Pipe Fittings

Polyvinyl Chloride (PVC) pipe was selected for this project work because it's a low carbon content, low cost, chemical resistance and ease of joining. They last long with a minimum of maintenance. Pipe fittings such as elbows, tees, valves, expanders, reducers, connectors, etc represent a significant component of the pipe pressure losses in most pipe systems. The design of this system involves water pumping through pipes and it is important to take into consideration these losses due to the fittings of the pipe.

The pressure losses through the pipe fittings and some minor equipment will be calculated using the K- value method. The K-value, Resistance Coefficient, Velocity Head, Excess Head or Crane method allows the user to characterize the pressure loss through fittings in a pipe. The K-value represents the multiple of velocity heads that will be lost by fluid passing through the fitting. It is more accurate than the Equivalent Length method, as it can be characterized against varying flow conditions (i.e. Reynold's Number). The velocity head methods is named as such because it represents the pressure loss through a fitting as the equivalent number of "velocity heads".

Formula for calculating head loss from K- values:

$$K_{\text{pipe}} = \frac{fL}{d}$$

Where f = friction factor L = length of pipe d = internal diameter of pipe

Table 1. Calculating K_{fittings} for the system under consideration

Fitting items	Number of items	K_{fittings} value	Item total
Elbow Bend 90^0	4	0.75	3.00
Threaded Union	2	0.04	0.08
Male Adapter	2	0.03	0.06
Ball valve	2	0.07	0.14
Total	10	0.89	3.28

2.2.5 Electric water pump

Water is pumped from the reservoir into a receiving tank. This kind of arrangement is used to lift water from a reservoir, or river, into a water treatment works for treatment before the water goes into the supply network. A typical example of water pump used is shown in fig.6. The water level in the reservoir varies but the discharge level in the receiving tanks remains constant as the water is discharged from a point above the water level. The pump is required to pass forward a flow of 3litres/sec to the overhead tank. The operating pressure of a pumped system is calculated in the SI unit of meters (m). To maintain dimensional consistency, any pressure values used within the calculations are therefore converted from kPa into m using the following conversion;

1 kPa = 0.102 m (as measured by a water filed U tube manometer). For the above system, the operating pressure or the total system head,

$$H_{Total} = H_S + H_D + (P_{RT} - P_{RES}) \quad (5)$$

Where; H_s = Static head (m), H_D = Dynamic head (m)
P_{RT} = Pressure on the surface of the water in the receiving tank (m)
P_{RES} = Pressure on the surface of the water in the reservoir (m)

Although the atmospheric pressure changes with height, the change in pressure that occurs over the pumping height is often so small that it can be considered negligible. In this exemplar, the change in pressure over the elevation from the reservoir to the receiving tank is not that significant and hence is negligible, i.e.

$$P_{RT} - P_{RES} \approx 0.$$

Therefore, equation (1) becomes:

$$H_{TOTAL} = H_S + H_D \quad (6)$$

The static head H_S is the physical change in elevation between the surface of the reservoir and the point of discharge into the receiving tank. As the water level in the reservoir can vary, the static head for the system will vary between a maximum and a minimum value:

H_{Smin}= discharge level reservoir TW L H_{Smax} = discharge level reservoir BW L
Where:
TWL = Top Water Level (reservoir) BWL = Bottom Water Level (reservoir)

As a result of the variation in the static head, the total system head, H_{Total}, will also have a maximum and minimum value which we need to calculate here. The dynamic head is generated as a result of friction within the system. The dynamic head is calculated using the basic Darcy Weisbach equation given by:

$$H_D = \frac{KV^2}{2g} \quad (7)$$

Where:
K = loss coefficient v = velocity in the pipe (m/sec) g = acceleration due to gravity (m/sec 2)
We can calculate the velocity in pipe using the following formula:

$$Q = AV \quad (8)$$

Where:
Q = flow rate through the pipe (m^3 /sec) A = pipe cross sectional area (CSA) (m^2)
V = velocity of flow (m/s)

If Q is 3litres/sec and the flow is pumped through a 1inch internal diameter pipe i.e. 1inch= 0.0254m
Then:

$$A = \frac{\pi(d_o^2 - d_i^2)}{4} = \frac{\pi \times (0.0284^2 - 0.024^2)}{4} = 1.27 \times 10^{-4}\,\text{m}^2$$

Hence, using equation (4), we get:

$$V = \frac{Q}{A} \qquad V = \frac{3 \times 10^{-3}}{1.27 \times 10^{-4}} = 24.59\ \text{m/s}$$

The loss coefficient K is made up of two elements:

$$K = K_{\text{fittings}} + K_{\text{pipe}} \quad (9)$$

K_{fittings} is associated with the fittings used in the pipe works of the system to pump the water from reservoir to the receiving tank. Values can be obtained from standard tables and a total K_{fittings} value can be calculated by adding all the K_{fittings} values for each individual fitting within the system. The table shown in the table 3.1 is used for the calculation of K_{fittings} for the system under consideration. Hence, the total K_{fittings} for the system under consideration is 0.89. These values will be used to determine the pump specification required.

2.2.6 Power supply unit

The power supply needed for this work is ac mains for the pump, but requires a dc supply for the micro-controller. This dc supply is obtained through s conversion process using inverter.

2.2.7 Sensors

The water level controller is an electronic circuit using ultrasonic sensor, transistors and relays. The circuit automatically switches ON the pump when water in the tank is 10 % and switches the pump OFF when water reaches a predetermined level 100%. The actuator is a power device that produces the input to the plant according to the control signal so that the output signal will approach the reference input signal. The acoustic wave signal is an ultrasonic wave travelling at a frequency above 18 KHz. Typically, a micro controller is used for communication with the ultrasonic sensor. To begin measuring the distance, the micro controller sends a trigger signal to the ultrasonic sensor. When triggered, the ultrasonic sensor generates about eight acoustic (ultrasonic) wave bursts and initiates a time counter. Figure 4 shows the sensor connection diagram. As soon as the reflected (echo) signal is received, the timer stops. The output of the ultrasonic sensor is a high impulse with the same duration as the time difference between transmitted ultrasonic bursts and the received echo signal.

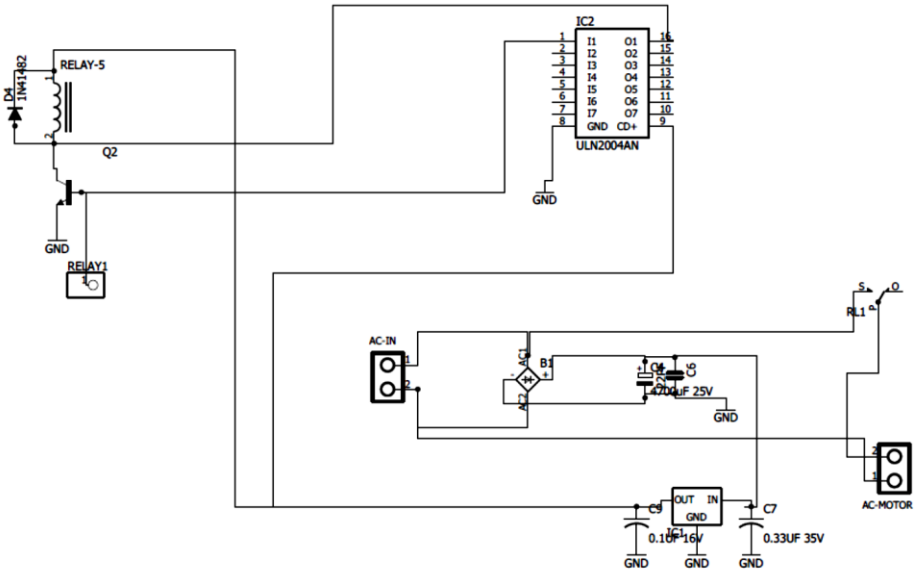

Fig 4. Sensor circuit diagram

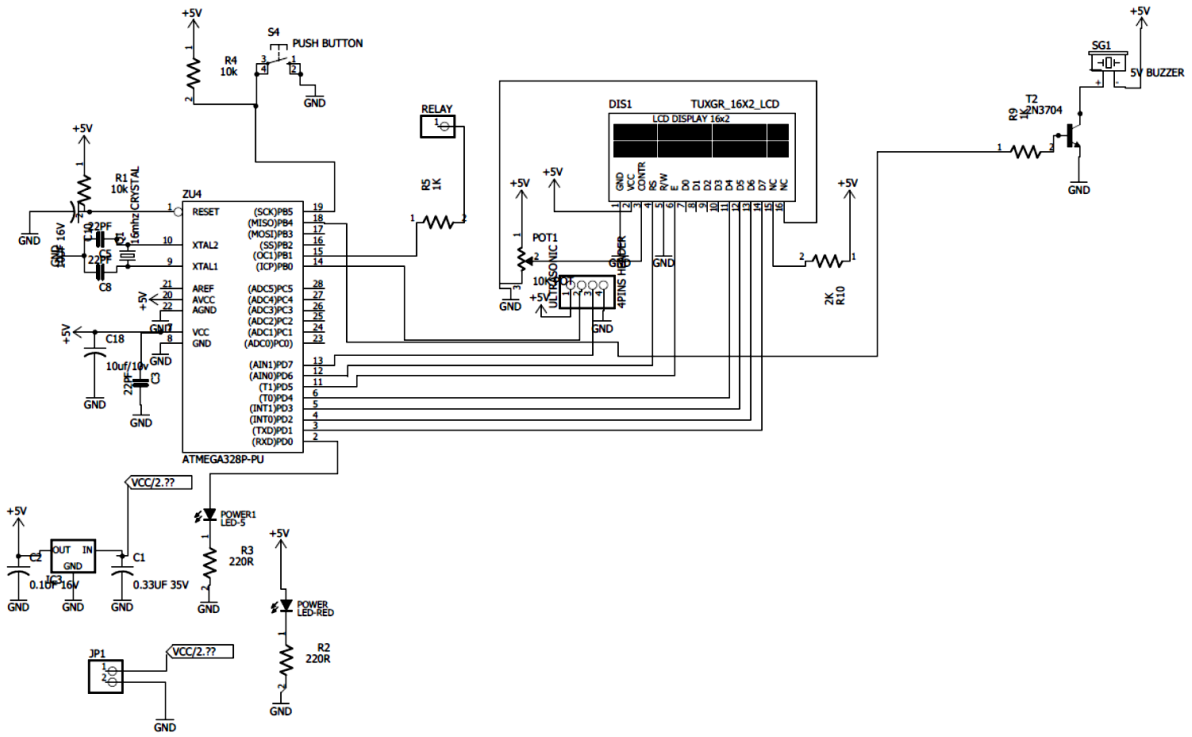

Figure 5. The water level controller circuit diagram

The micro controller interprets the time signal into distance which is theoretically measured using the TDR (time/distance/rate) measurement formula. Figure 5 shows the water level controller circuit diagram. Since the ultrasonic distance is the distance travelled from the ultrasonic transducer to the object – and back to the transducer – it is a two-way trip. By dividing the distance by 2, one can determine the actual distance from the transducer to the object. Ultrasonic waves travel at the speed of sound (343m/s at 20^0C). The distance between the object and the sensor is half of the distance travelled by the sound wave, given a

$$Distance = \frac{time\ taken \times speed\ of\ sound}{2}$$

3.0 ANALYSIS AND TESTS

The digital water level controller system keeps the water level in the overhead reservoir from going dry by constantly adjusting its output (pump ON or OFF) depending on the input it gets from the water level sensor. The system input, control, process, output and feedback are illustrated in the figure 6 as in the conventional feedback control system. It is a mathematical function which says how input and output of system is transferred. The function thus gives us the idea of dynamics.

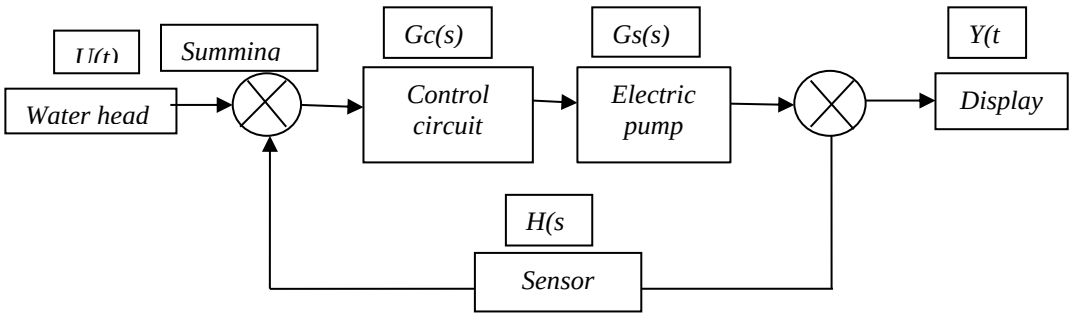

Figure 6. The system input, control, process, output and feedback

3.1 Test for control circuit sensor

The ultrasonic sensor module is interfaced with the microcontroller. When level distance measured in meters falls below a low level the pump starts by sensing the signal coming out and receiving level coming to the ultrasonic transducer which is fed to the microcontroller. When the microcontroller receives the signal from the transducer it activates the relay through a MOSFET that operated the pump ON or OFF. Tables 2 (a) and (b) shows the values obtained for time at different speed variation and the calculated discharge for each speed as the system is bee tested.

Table 2 (a) and (b) Speed (rpm) variation with Time (sec) and Speed (rpm) variation with Discharge m^3/s

(a)		(b)	
Speed (rpm)	**Discharge (m^3/s)**	**Speed (rpm)**	**Time (sec)**
400	1	400	42
800	2	800	40
1600	3	1200	30
2000	4	1600	22.5
2400	5	2000	19.5
2400	6	2400	16.5
2800	7	2800	15.0

The adjustments made by the system refer to check for errors. As the water level get to lowest level (100 m) the system gives positive feedback and the pumping machine turns ON. When it gets to the highest point (900 m) the system gives a negative feedback or error signal which turns OFF. The water is not allowed to fill the tank completely (900 m) to avoid over filling. The level of the water in the tank is the measured parameter here and is displayed in the digital display. Table 3 shows the circuit displays of the state of the system in response to the sensor signal and at what distance from the sensor this occurs.

Table 3 Test for sensor response at different water level

S/N	Water level	Sensor Response and Circuit display	Pumping Machine State	Percentage of Sensor Response (%)
1	100 m	Tank empty	pump ON	0
2	200 m	Detects increase in water level Displays 200 m	pump ON	20
3	300 m	Detects increase in water level. Displays 300 m	pump ON	30
4	400 m	Detects increase in water level. Displays 400 m	pump ON	40
5	500 m	Detects increase in water level. Displays 500 m	pump ON	50
6	600 m	Detects increase in water level. Displays 600 m	pump ON	60
7	700 m	Detects increase in water level. Displays 700 m	pump ON	70
8	800 m	Detects increase in water level. Displays 800 m	pump ON	80
9	900 m	Detects the highest level of water. Displays 900 m	Pump Off	90

The sensor detects water level by emitting short ultrasonic burst and then listening for the echo. Under control of a host microcontroller, the sensor emits a short 40 KHz explosion which travels through air, hits an article and bounces back once again to the sensor. From the above result, it could be seen that there is variation in distances at which the sensor detects water level and the display shows a pump on or off condition, and also the volume water discharged with percentage of fill in the tank.

Sensor efficiency.

The efficiency of the system was tested thus;

$$Efficiency\ \eta = \frac{output}{input} \times 100$$

At the highest water level in the tank, which is 900m, the efficiency is,

$$\eta = \frac{800}{900} \times 100 = 88.9\%\%$$

5. Results and Discussion

This system was used to determine the discharge of water by the delivery pipe at different speeds. The electric pumping machine speed is varied using triac. For every speed at which the electric pumping machine was turned, the time taken to fill the overhead tank at different volume was recorded and hence the discharge for that speed determined since the volume in this case is constant but the time it takes the sensor to shut down the pump varies when the tank is filled. The recorded values of time at different speed variation and the calculated discharge for each speed and time in tables 2(a) and (b) are used to plot a graph of speed against time and speed against discharge shown in figure 7 and figure 8.

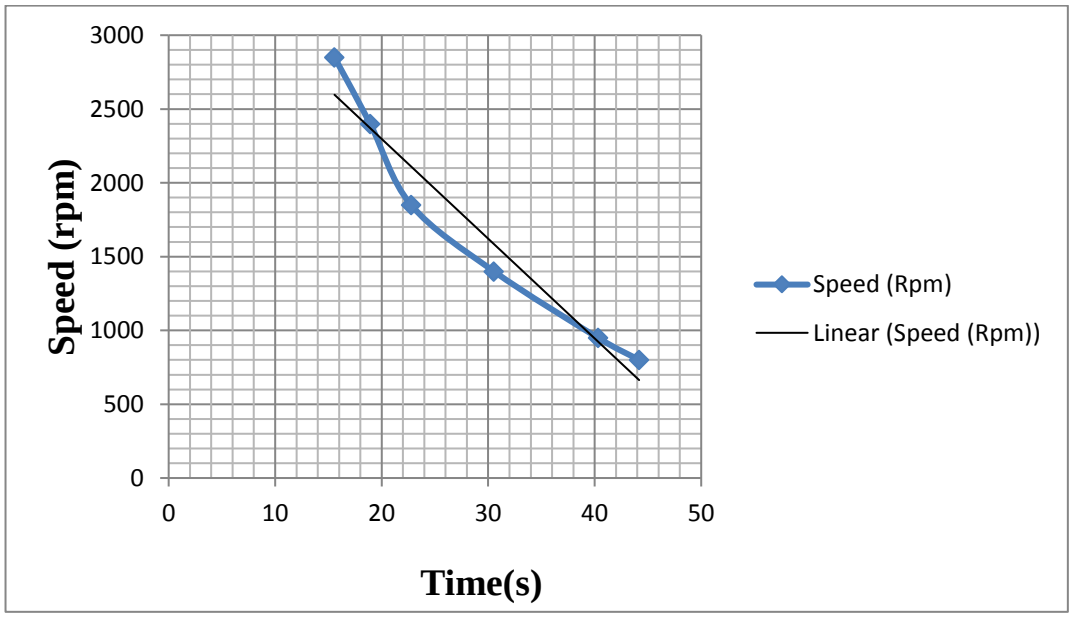

Figure7 Graph of speed against time

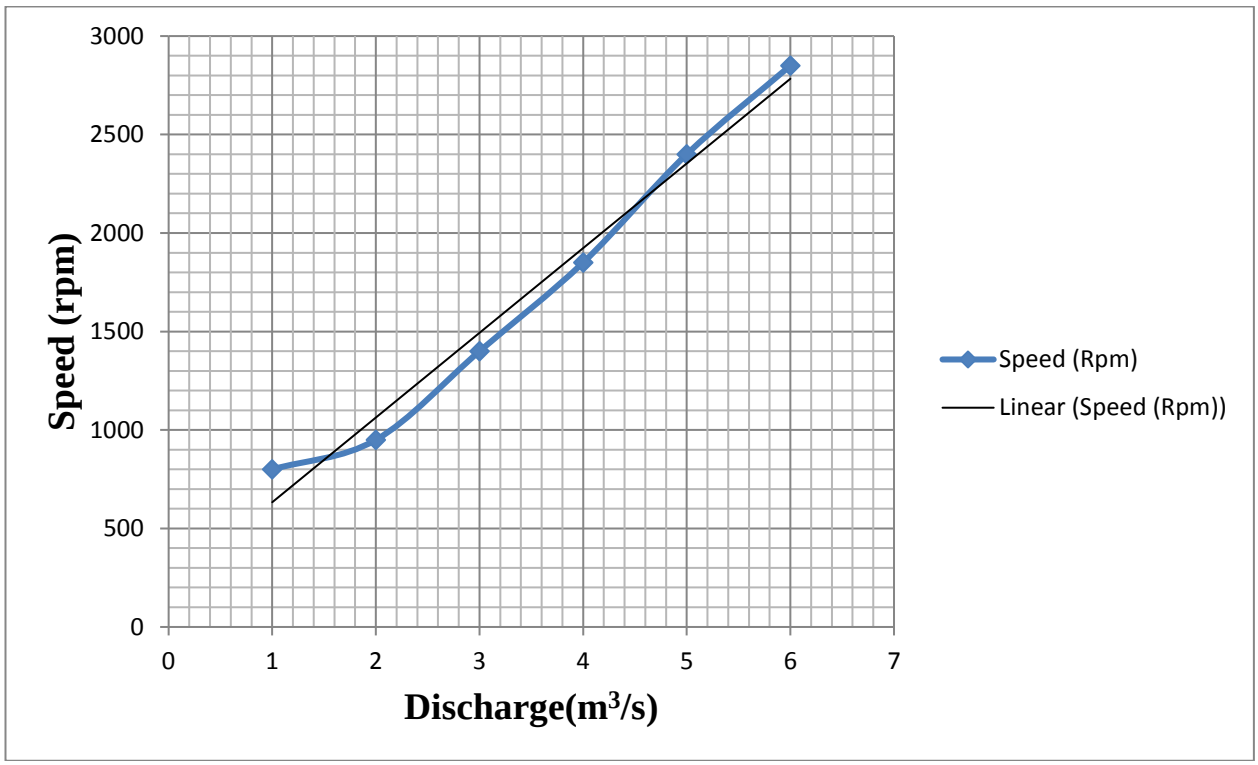

Figure 8 Graph of speed against discharge

The results obtained from graphs 7 and 8 indicate that at a lower speed it takes longer time to fill the tank, and at a higher speed, the discharge will be higher and time taken to fill the overhead tanks will be reduced. Also the values obtained in Table 3 was plotted in Figure 9. The result shows that the senor responds linearly to the volume of water, indicating that as the volume of water increases in the tank reservoir the time taken for the sensor to shut down increases.

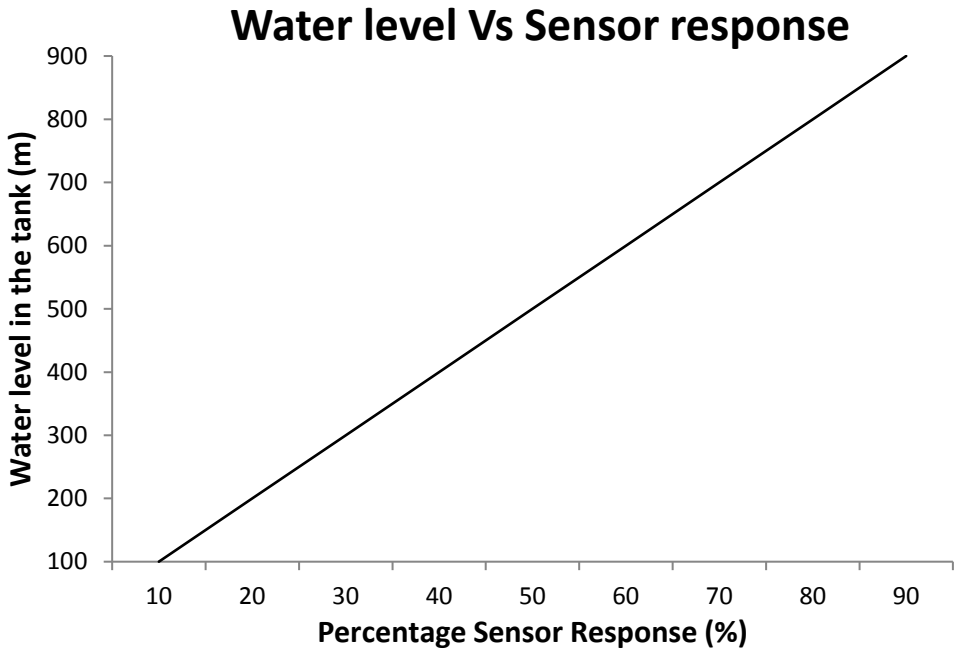

Figure 9. Graph of water level verses sensor

6. Conclusions

This work, design of a prototype digital water level controller using ultrasonic sensor interfaced micro-controller has been carried out. It achieved a control system design that could regulate the pumping of water into an overhead tank or reservoir to avoid waste and eliminate human effort and time in operating the pumping machine that discharges water in the overhead tank. The ultrasonic sensor interfaced with the micro-controller performed the automation required. The control panel display unit, displayed the level of water in the tank indicating the volume discharged at any time. This control system can be very useful in various homes, offices, industry or laboratories to regulate the water supply to their various overhead tanks or reservoirs.

The results obtained from texts shows that the prototype provides information about water level on the display unit, and that the response of the sensor to the volume of water discharged was linearly. It was also shown that the sensor response time increases with increase in volume of water discharged. This work was designed to be used in a dug well, though it can be applied in many different areas. Other application areas can be rivers, water channels and sea level measurements. But it will require more accurate sensor calibration based on the temperature and the humidity. This can be basis furfure research.

References

[1] World Bank Group. Unsettled Water and Sanitation in Urban Settlement Communications of the Pacific. 2015 19 Nov 2: 1-6.

[2] Patrik K, Martin F. Modelling of Freshwater Supply of cistern in ancient Greece, Springer link open access. 2018 Sept 1 (10): 113-131

[3] Getu, B. N., & Attia, H. A. Automatic Control of Agricultural Pumps Based on Soil Moisture Sensing.. Proceedings of the IEEE AFRICON Conference. 2015 Sept 11(10): 1-5

[4] Kufre, E. J., Nwangwu, O. E., Etu, I. A., & Osuagwu, E. U. Implementation of a microcontroller-based water level control system with seven segiment display for domestic and laboratory application. International journal of engineering research and development, 2016, October 12(10), 15-20.

[5] Sai, P. Y. Automated smart water level indicator using IOT-AN effective pratice of smartg irrigation. International journal of computer science engineering, 2017 April 6(4): 2319-2323.

[6] Wibawa, K. S., & Wirabuana, P. Design and Implementation of Monitoring System Automatic Water Level Reservoir Controller. International Journal of Latest Engineering Research and Applications, 2018 July 3(12): 8-15

[7] Das, S., Dhar, S., Deb, P. B., & Majumdar, P. S. Microcontroller Based Water Level Indicator and Controller. Asian Journal of Applied Science and Technology (AJAST), 2017 June 26 1(6), 181-182.

[8] Pathan, S., Kumar, P., Tendolkar, S., Patil, V., Lucaas, S., & Daithankar, A. Automatic control of a Pumping System for Water Level using Microcontroller and LabView. International research journal of engineering and technology (IRJET), 2016, May 03(05), 2673-2676.

[9] Angelakis, A.N.; Mamassis, N.; Defteraios, P. Urban Water Supply, Wastewater, and Storm water Considerations in Ancient Hellas: Lessons Learned. *Environ. Natl. Resource. Res.*, 2014 June 5(*4*): 95–102.

[10] Alshekhly Zoubida, Dalkic Yurdaer. Development and design of a prototype for monitoring the water level in water wells using LoRaWAN, Faculty of Technology and Society Malmo University 2018 May 30: 1-59.

[11] Sudhasmita B, Satya P, Debaraj S, Pankaj K, Ashish P & Peenaki S. Rain water Harvesting integrated with Energy Efficient Pumping- A case study and analysis International research journal of engineering and technology (IRJET), 2016, May 03(05), 170-178.

[12] Open loop and Closed loop control system. Sivaranjith. October 6, 2018. Avalable from https://automationforum.co.