WEST AFRICAN JOURNAL ON SUSTAINABLE DEVELOPMENT

INCLUSIVE UNIVERSITY EDUCATION ON THE HOLISTIC EMPOWERMENT OF FEMALE SCIENCE STUDENTS' IN ENUGU STATE: IMPLICATIONS FOR SUSTAINABLE DEVELOPMENT GOALS ATTAINMENT

[1]Onah, Kingsley T. & [2] Nwankwo, Madeleine Chinyere
[1]kingsley.onah@esut.edu.ng & [2] mac.nwankwo@unizik.edu.ng
Orcid: [1]https://orcid.org/0000-0003-4075-8580 & [2] https://orchid.org/0000-0001-9821-5867
[1]Department of Science Education, Enugu State University of Science and Technology P.M.B. 01660 Agbani, Enugu State, Nigeria.
[2]Department of Science Education, Nnamdi Azikiwe University, Awka, Nigeria.

Abstract
The consistent home vices and divorce without recurring decimal to what causes it in Enugu State, Nigeria necessitated the study. Therefore, the purpose of the study was to investigate the influence of university education on the holistic empowerment of female science students in Enugu State: Implications for sustainable development goals. Four research questions and four null hypotheses tested at .05 level of significance guided the study. A correlational research design was adopted for the study. Simple random sampling technique was used in selecting 172 female science education students comprising 119 single and 53 married from Department of Science Education. The instrument used for data collection were four in number: the holistic empowerment of university education scale, (HEUES), intellectual empowerment scale (IES), financial empowerment scale (FES), and socio-cultural empowerment scale (SCES) adapted from 21 items scale of Abhinanadan, Abhishek, Sanath and Gururaj (2023). The reliability of the instruments was tested using Cronbach's alpha which yielded indices of 0.76, 0.85, 0.91 and 0.75 respectively. Data were analyzed using mean, standard deviation and path analysis to test the proposed hypotheses. The finding of the study amongst others indicated that university education intellectually, financially and socio-culturally influenced holistic empowerment of female science students irrespective of marital status in Enugu state. Based on the findings, it was recommended that government agencies and private individuals to roll out measures to encourage female folk to attain university education.

Keywords: Education, Science, Sustainable development goals, Holistic empowerment and female science students

Introduction

Education is the most important component of human resources development and it is accorded with a pride of place in many countries' developmental activities. There is no doubt that the importance of Education to students cannot be underestimated because there is no country that has succeeded technologically and otherwise without educating its people. Education is the bedrock in a nation's development. An educated population is the workforce to the nation. The purpose of education is to help people acquire sustainable knowledge, skills, values, and positive attitudes for the formation of the heart and the transformation of the society (Onah, 2023). What this entails is that education informs and forms the student for societal development. In order to acquire the appropriate skills, and knowledge for societal transformation, university education cannot be underscored. Drawing from the national policy on education, the Federal Republic of Nigeria, (FRN) (2014) established the goals of university education. University Education is the level of education that employs a technique which focuses on preparing learners to meet any challenges they may face in life and in their academic career. The most crucial theories behind university education are learning about oneself, developing health relationships and positive social behaviors. University Education provides information and skills to the youths/ learners, as well as influences the personality of the youth of a nation to be critical and productive (Alao & Ajayi, 2017). According John, (2017) university education should integrate a holistic education which starts from the lower level of education and parents and teachers being the first teachers should assist the pupils to learn and recognize how to be able to do what they want in life. Holistic Education is a model which focuses on preparing youngsters to be able to encounter with any problems they may come across with in life and in their educational occupation. The most important theories behind holistic education are learning about oneself, developing health relationships and positive social behaviors, social and emotional development, resilience, and the ability to view beauty, experience transcendence and truth. Holistic education notes that youth need not only to develop mentally, but also progress in skills as capability to endure in the contemporary world and to transform the world whenever

they will be after graduating from their studies. It opined that the goals of university education shall be to: contribute to national development through high level relevant manpower training; develop and inculcate proper values for the survival of the individual and society; develop the intellectual capability of individuals to understand and appreciate their local and external environments; acquires both physical and intellectual skills which will enable individuals to be self-reliant and useful members of the society; promote and encourage scholarship and community service; forge and cement national unity; promote national and international understanding and interaction. These sole aims of university education are nested in the relevance of sustainable development goals.

The sustainable development goals (SDGs) otherwise known as Project 2030 is a set of international development goals adopted by United Nations (UN) summit on September 2015. The United Nations summit was made up of 193 countries with Nigeria as one of its members. The UN summit positioned Science, Technology and Innovation (STI) as key means of implementing the SDGs. The sustainable development goals are blueprints which consist of 17 goals and 169 targets with the main objectives to eradicate poverty, equalize educational opportunity, realize a sustainable world, secure the planet and ensure that everyone experience peace and prosperity to the fullest by the year 2030. Sustainable development goal 4 and 5 (SDG 4 and 5) are parts of the 17 SDGs that aims at ensuring inclusive and equitable quality education that will promote a lifelong learning opportunities and achieve gender equality and empower women and girls by the year 2030. The role of education in ensuring sustainable development is not limited to developing country like Nigeria but a global issue. Education is seen as a force for attainment of the SDGs with science education inclusive. In view of this the makers of National policy on education stipulated that the goals of education is the development of appropriate skills, mental, physical and social abilities and competencies to empower the individuals to live in and contribute positively to the society (FRN 2013). Globally, it is an acceptable fact that quality education promotes the development of every individual and offers him /her opportunities for capacity building and enabling

environment to contribute ones' quota to the society to enhance national, economic and social growth of that nation (Anamezie and Nnadi 2017). It implies therefore, that any nation desiring to move forward scientifically and technologically should do so through functional science education. Science education is an integral field of study that comprises science disciplines of Physics, Chemistry, Biology, among other sciences together with the processes involved in teaching and learning of science education. This is actually the concern of this present study where many women are relegated to the background in their various homes because of lack of empowerment opportunities. Here, Science education is the answer to empower women holistically through university education.

Despite the positivism of university education for sustainable development goals and national development, female folk enrollment in the university system has been so abysmal. Data from National Bureau of Statistics (NBS, 2021), shows that 75% of women population at the level of university education is not enrolled in the university system. Researchers have attributed many home vices like fight, hunger, poor income contribution at home, low self-esteem, and poor educational background of the children to have emanated as a result of low enrollment and attainment of university education. The researchers suggested that adequate university education through science education has the potential for helping the female students develop the required abilities and understanding by focusing on developing powerful ideas of science and ideas about the nature of scientific activity and its applications with holistic empowerment.

Empowerment is the ability to take effective control of oneself or one's life in terms of being well informed and equipped with education, finance, and other relevant skills. It is also the ability to take decisions and to act on such decisions without any external hindrances (Barra and Barra, 2019). Supporting the above point, Murtaza (2012) stated that empowerment is a term which has its root in power. Stressing further, Murtaza maintained that to empower means to give power or authority to enable a person to take decision by himself. Empowerment implies that the person being empowered has hitherto lacked power or authority, either by default or denial. In the context of this study, empowerment can be defined as

the ability to take decision and act on it without hindrance due to the support gained by an individual (Adeyeye, 2017). Holistic empowerment in relation to this study is hinged in three paramount level of empowerment as intellectual empowerment, financial empowerment and socio-cultural empowerment (Ilo, 2022).

Intellectual and Educational Empowerment

Education can be a path breaker in women's liberation because it enables them to adapt to demands, confront their conventional roles, and transform their lives. Schooling and gaining substantive knowledge is the most important method for transforming society's position since it eliminates inequality and serves as a way of strengthening their status with their families (Yadav et al., 2011).When Woman has higher education, she will acquire greater access to employment opportunities and enhance her capabilities to attain her own financial resources (Malik & Courtney, 2011)

Financial Empowerment

Women's status is inferior to that of men considering her financial status in the family and otherwise when proven. Furthermore, it has been discovered that literacy is the single most significant element in educating women and paving the way for economic and financial equality, which will boost women's status (Junussova et al., 2019). It's observed the fact women are capable to indulge themselves in meaningful activity that will permit them financial freedom to some extent though it is difficult to attain in the initial stage (Lavanya & Ahmed, 2018).

Socio-cultural Empowerment

Socio-cultural status of a woman is her state to initiate a comfortable well-being of the nation. West, (2016) came out with the fact that women with education or sufficiently informed about their rights provided by the law and how to exercise them and thus be more active politically and take part equally in social and political decision-making processes. It is also observed that the development of the women witnessed a replication in the constitution of the Nigeria were in laws were enacted to exterminate the social evil of inequality, government sponsored programmes like ministry of women affairs, and the demand for reservation in political institutions (Liu, 2017). According to Ganeshan and Anbalagan, (2018), identified that early marriage declines as girls obtain education

and female education results in the decrees of infant and child mortality rates. The local sex ratio works through the spousal age ratio which influences marriage markets and also household bargaining power (Neelakantan & Tertilt, 2018) Women's social inclusion and standing in society would increase if they receive a higher standard of education. Education teaches strong decision-making skills and management tools (Stark et al., 2018).

These potentials of university education incites the need for further investigation into the predictive power of empowerment of female students through university education of married and unmarried female students irrespective of marital status.

Marital status is defined as the state of being married or not married. According to stark (2018), marriage provides 'protection' against adverse health outcomes, through modified health behaviours and social networks arising from the union. It has been observed that many graduates who are married are forced to stay at home without meaningful source of income. This makes them to be vulnerable, and be at the mercy of their husbands because they are not empowered financially. As a result of the non-financial empowerment of women, the fall prey to socio-cultural enslavement, and all manners of marital abuses. This has made some families to be dysfunctional. Lavanya and Ahmed (2018) observed that single ladies are wealthier than their married counterparts following their regular enterprising mechanism without hitches from their husbands. Female plays a central role in the socioeconomic development of any society. In fact, societal sustainable development is possible only if women are involved. Females must therefore be both participants and beneficiaries of development programme whether married or not. Due to lack of consensus regarding the issue of marital status and science and more importantly to capture the interest of married folk, and consequently improve their empowerment and other science related carriers, there is need therefore to investigate the influence of university education on the holistic empowerment of female science students in the sciences education.

Based on the problem of the study, the study investigated the influence of university education on the holistic empowerment of female science students' in

Enugu state: Implications for sustainable development goals.

Specifically, the study sought to determine the:

1. Level of holistic empowerment through university education.
2. Influence of university education on female students holistic empowerment.
3. Moderating influence of marital status of university education on female students' holistic empowerment.

In line with the purpose of the study, the following research questions were designed to guide the study.

1. What is the extent of perception of holistic empowerment of female science students' through university education?
2. What is the extent of intellectual empowerment in empowering female science students holistically?
3. What is the extent of financial empowerment in empowering female science students' holistically?
4. What is the extent of socio-cultural empowerment in empowering female science students holistically?

The following null hypotheses were proposed for the study, which was tested at .05 level of significance.

1. Intellectual empowerment has no significant influence on female students' holistic empowerment.
2. Financial empowerment has no significant influence on female science students' holistic empowerment.
3. Socio-cultural empowerment has no significant influence on female science students' holistic empowerment.
4. Moderating influence of marital status of university education female students' has no significant influence on their holistic empowerment.

Method

A correlational survey research design was employed for the study. The correlational survey design was preferred because it is the kind of study that seeks to establish what relationship exist between two or more variables and as well predict the relevance of one over another (Nworgu, 2015). The study was carried out in Enugu State, Nigeria. Enugu State has seventeen local government areas which include: Enugu,

Aninri, Awgu, Enugu East, Enugu North, Enugu South, Ezeagu, Igbo Etiti, Igboeze North, Igboeze South, Isiuzo, Nkanu East, Nkanu West, Nsukka, Oji River, Udenu, Udi and Uzo-Uwani. The area houses many indigenous tertiary institutions which include University of Nigeria, Nsukka (UNN), Enugu State University of Science and Technology (ESUT), Institute of Management and Technology, College of Education Technical and many private institutions. The area is predominantly mixed location as urban, semi-urban and rural in nature with basic amenities such as good roads, hospitals, electricity, schools and markets. Most people living in the zone were civil servants, students, traders and many farmers. The researchers chose Enugu State due to the fact that most of the female folk in the area recorded higher degree of domestic violence, low enrollment in the university education despite numerous institutions of higher learning in the area. Therefore, this research will help female students' understand the full impact of university education on the holistic empowerment of their race. The population of the study was 321 Science Education students in Enugu State University of Science and Technology (ESUT). The sample for the study consisted of 172 students (119 single and 53 married). The sample was drawn using purposive sampling technique, because the study was restricted to Science Education students. Simple random sampling, precisely balloting with replacement was used to select female students from 100 levels to 400 level students in the Science Education department. The instrument used for data collection were four in number: the holistic empowerment of university education scale, (HEUES), intellectual empowerment scale (IES), financial empowerment scale (FES), and socio-cultural empowerment scale (SCES) adapted from 21 items scale of Abhinanadan, Abhishek, Sanath and Gururaj (2023), the researchers adapted the scale because five (5) items could not satisfy the confirmatory factor analysis test of construct validation. Therefore, the 5 items were dropped. The items were modified from university students rating to suit undergraduate Science Education students.

HEUES, IES, FES and SCES are on a five-point scale, ranging from 1 (Exactly false) through 3 (Neutral) to 5 (Exactly true) for positive statements and 1 (Exactly true)

through 3 (Neutral) to 5 (Exactly false) for negative statements.

The four instruments HEUES, IES, FES and SCES were face validated by three experts from Enugu State University of Science and Technology (ESUT) and tested for internal consistency reliability using Cronbach's alpha which yielded coefficients of 0.76, 0.85, 0.91 and 0.75 respectively, with an overall reliability index of 0.91. The instruments were administered to the students by two research assistants (Laboratory technologists) from the department of science education, ESUT. The Research questions were answered using mean and standard deviation while the proposed hypotheses, a path analysis in AMOS version 22 was employed, and all estimates were calculated using the maximum likelihood at 95% bias-corrected confidence intervals (CI95%).

Results

Research Question 1: What is the extent of perception of holistic empowerment of female science students' through university education?

Answer to Research question 1 is presented in Table 1

Table 1: Mean ratings and SD on the extent of holistic empowerment of female science students through university education.

S/N	Items	Mean	SD	Decision
1	University education enables the female science student to develop a distinctive career path	3.27	1.19	High perception
2	University education enables the female science students to be better placed to get well-paying job	3.22	1.14	High perception
3	University education enables the female science student to develop critical thinking and personal growth	3.38	1.02	High perception
4	University education enables the female science student with creative and problem solving ability	3.79	1.25	High perception
	WEIGHTED AVERAGE	**3.42**	**1.15**	**High perception**

Table 1 shows the perceptions of the respondents on the extent of holistic empowerment of female science students through university education. The four (4) items constructs have high perception on the relevance of university education for holistic empowerment.

Research Question 2: What is the extent of intellectual empowerment in empowering female science students holistically?

Answer to Research question 2 is presented in Table 2

Table 2: Table 4: Mean ratings and SD on the extent of intellectual empowerment in empowering female science students holistically.

S/N	Items	Mean	SD	Decision
1	Providing University education to women helps in building nation	2.49	1.48	Low perception
2	University educated women show more self-assurance and social endorsement in the progress of community	2.45	1.14	Low perception
3	University education brings environmental awareness and protection among women	2.65	1.40	High perception
4	University educated women show adequate training of their children at home	2.33	1.22	Low perception
	WEIGHTED AVERAGE	**2.48**	**1.31**	

Table 2 shows the relevance of intellectual empowerment for holistic empowerment of female science education students. Items 1, 2and 4 showed low perception while item 3 showed high perceptions. The weighted mean shows that 50% of the respondents perceived higher and above the mean on the impact of intellectual empowerment for holistic empowerment of female science education students.

Research Question 3: What is the extent of financial empowerment in empowering female science students' holistically?

Answer to Research question 3 is presented in Table 3

Table 3: Mean ratings and SD on the extent of financial empowerment in empowering female science students holistically.

S/N	Items	Mean	SD	Decision
1	Women who have University education earn income through business, Job or any other source.	2.73	1.46	High perception
2	University educated females have financial freedom than other illiterate women	2.63	1.35	High perception
3	University educated women can understand and have access to loan for business expansion and productivity than other women.	2.54	1.44	High perception
4	University educated women are much aware of various investment avenues	2.45	1.42	Low perception
	WEIGHTED AVERAGE	**2.59**	**1.42**	

Table 3 shows the relevance of financial empowerment for holistic empowerment of female science education students. Items 1, 2and 3 showed high perception while item 4 showed low perceptions. The weighted mean shows that 50% of the respondents

perceived higher and above the mean on the impact of financial empowerment for holistic empowerment of female science education students.

Research Question 4: What is the extent of financial empowerment in empowering female science students' holistically?

Answer to Research question 4 is presented in Table 4

Table 4: Mean ratings and SD on the extent of socio-cultural empowerment in empowering female science students holistically.

S/N	Items	Mean	SD	Decision
1	University education helps women to attain Social Status	2.38	1.45	Low perception
2	University educated women can influence to eradicate social evils like eve-testing, drug addiction, alcoholism, etc	3.08	1.30	High perception
3	University educated register their name for election and lead political parties	3.01	1.40	High perception
4	University educated women are competent leader and committed in political field	3.23	1.47	High perception
	WEIGHTED AVERAGE	**2.93**	**1.41**	

Table 4 shows the relevance of socio-cultural empowerment for holistic empowerment of female science education students. Items 2, 3 and 4 showed high perception while item 1 showed low perceptions. The weighted mean shows that 75% of the respondents perceived higher and above the mean on the impact of socio-cultural empowerment for holistic empowerment of female science education students.

Table 5: Standardized Regression Weights: (Group number 1 - Default model)

			Estimate	p
HE	<---	IE	-.250	.010
HE	<---	FE	.258	.003
HE	<---	SCE	.855	***
HE	<---	Marital status	-.038	.449
IE4	<---	IE	.730	***
IE3	<---	IE	.817	***
IE2	<---	IE	.973	***
IE1	<---	IE	.546	***
FE4	<---	FE	.798	***

			Estimate	p
FE3	<---	FE	.809	***
FE2	<---	FE	.866	***
FE1	<---	FE	.864	***
SCE4	<---	SCE	.895	***
SCE3	<---	SCE	.918	***
SCE2	<---	SCE	.358	***
SCE1	<---	SCE	.447	***
HE1	<---	HE	.672	***
HE2	<---	HE	.728	***
HE3	<---	HE	.444	***
HE4	<---	HE	.882	***

Key

IV = Independent Variable (IE = Intellectual Empowerment, FE = Financial Empowerment, and SCE = Socio-Cultural Empowerment)

DV = Dependent Variable (HE = Holistic Empowerment)

CV = Control Variable (Marital Status)

This result also showed in path diagram and its goodness of fit measured with CMIN (1307.532), DF (113), GFI (0.629), AGFI (0.498), CMIN/DF (11.571), CFI (0.549), TLI (0.457), IFI (0.553), SRMR (0.280), RMSEA (0.249) and Pclose (0.000). All these fit indices of model showed perfect for good model. Table5 indicates standardized regression weights of each path, which revealed that intellectual empowerment through university education significantly influence 25% on holistic empowerment, financial empowerment through university education significantly influence 25.8% on holistic empowerment, and socio-cultural empowerment significantly influence 85.5% on holistic empowerment while controlling marital status of the female students, marital status has no significant influence on holistic empowerment of female science students. Since all standardized regression value statistically significant, it has been concluded that university education influence women empowerment irrespective of marital status.

Hypothesis 1: Intellectual empowerment has no significant influence on female students' holistic empowerment.

Table 6: Summary of regression weights of the observed variables

		Estimate	S.E.	C.R.	P	Decision
UE	<--- IE	-.226	.087	-2.593	.010	Significant
UE	<--- FE	.182	.061	2.982	.003	Significant
UE	<--- SCE	.520	.067	7.778	***	Significant
UE	<--- Marital status	-.067	.099	-.676	.499	Not Significant

Table 6 shows that the probability of getting a critical ratio as large as -2.593 in absolute value is less than 0.000. The result figured out that intellectual empowerment influences holistic empowerment (β= -.226, t (172) = -2.593, P < 0.05[.010]). In other words, the null hypothesis is rejected. Thus: the regression weight for **Intellectual Empowerment** in the prediction of **Holistic Empowerment** is significantly different from zero at the .010 level (two-tailed).

Hypothesis 2: Financial empowerment has no significant influence on female science students' holistic empowerment.

Table 6 shows that the probability of getting a critical ratio as large as 2.982 in absolute value is less than 0.000. The result figured out that financial empowerment influences holistic empowerment of female science education students positively and significantly (β= .182, t (172) = 2.982, P < 0.05[.003]).In other words, the null hypothesis is rejected. Thus: the regression weight for **Financial Empowerment** in the prediction of **Holistic Empowerment** is significantly different from zero at the 0.003 level (two-tailed).

Hypothesis 3: Socio-cultural empowerment has no significant influence on female science students' holistic empowerment.

Table 6 shows that the probability of getting a critical ratio as large as 7.778 in absolute value is less than 0.000. The result figured out that socio-cultural empowerment influences holistic empowerment of female science education students positively and significantly (β= .520, t (172) = 7.778, P < 0.05[.000]).In other words, the null hypothesis is rejected. Thus: the regression weight for **Socio-cultural Empowerment** in the prediction of **Holistic Empowerment** is significantly different from zero at the 0.000 level (two-tailed).

Hypothesis 4: Moderating influence of marital status of university female science education students' has no significant influence on their holistic empowerment.

Table 6 shows that the probability of getting a critical ratio as large as -.676 in absolute value is greater than 0.05. The result figured out that marital status of female science education students' does not influence holistic empowerment of female science education students positively and significantly (β= -.067, t (172) = -.676, P > 0.05[. 499]).In other words, the null hypothesis is not rejected. Thus: the regression weight for **marital status of female science education students** in the prediction of **Holistic Empowerment** is not significantly different from zero at the 0.499 level (two-tailed).

Discussion

The finding of the study showed that university education intellectually, financially and socio-culturally influenced holistic empowerment of female science education students' irrespective of their marital status. The finding of this study showed negative relation with holistic empowerment of female science education students. This indicts the fact that more is needed for attainment of intellectual empowerment of female folk as required by SDGs goal 4 and 5. Intellectual empowerment through university education provides female science education students' with the rationale and intelligibility to integrate in the real world. This has helped them to acquire basic skills needed for holistic function as a woman. The finding of this study is consistent with Malik and Courtney (2011), John (2017), Duyilemi (2017) and Ankeli (2019) in their respective studies; they identified intellectual properties as the most fundamental empowerment needed for holistic well-being especially as regards girl child.

Again, the study revealed that financial empowerment through university education provides the female science education students' with an apple opportunity for a decent jobs and employment. This provides them with the avenue to make money and gain financial freedom. The finding of this study agreed with Kaigama, and Audu (2014), Fletcher (2014), Liu (2017), Lavanya and Ahmed (2018), and Igbodalo (2018) in their respective studies, they pointed out the relevance of financial empowerment to the well-being of a girl child in the society. Financial empowerment not only gives a girl child freedom but also gives sense of belonging and self-confidence amongst her mates irrespective of gender as accorded in SDGs goal 5.

Furthermore, the study identified the role of university education of female science students as very important for socio-cultural participation. Socio-cultural empowerment provides the female science students with the eligibility to participate in decision making at home and society at large for national development. This study accessed the socio-cultural importance of female students' education and contributed significantly to the prediction and influence of holistic empowerment. The finding of this study is consistent with Liu (2017), Ganeshan and Anbalagan (2018) and Obanya (2014), the researchers identified socio-cultural empowerment as a major for female science students' attainment in university education. This study equally pointed out that marital status of the female students has no significant impact to the acquisition of holistic empowerment. The study agreed with Odili, Eze and Odile (2013), Sako (2015) and Stark (2018), the researchers observed that marital status is not a factor in women holistic empowerment.

Conclusion/ Recommendations

The study concludes that university education through science education is very paramount in the development of a girl child. This provided a fertile base for the girl child to develop intellectually, have financial freedom and actively participate in socio-cultural activities. It was recommended that parents should do their parental obligations of sending their female children to acquire university education. Government at all levels should roll out measures that would enhance female students' opportunity to access university education. It was also recommended that private individuals should plough back in the society by way of training female students in university through scholarship program.

References

Abhinanadan, K., Abhishek, N., Sanath, K. and Gururaj, P. (2023). Does higher education influences on women empowerment? – A perceptual study. *Publication of Research Square.*

Adeyeye V.A. (2017) *Women and Development in Nigeria: An Annotated Bibliography and Future Direction.* A paper presented at the seminar on women's studies: the State of the Art Now in Nigeria. Institute of African Studies.

Alao, P. C. and Ajayi, L. M. (2017) 'Women in Nigerian Education' in Sesay Amodu and Odebiyi Adetanwa Eds. *Nigerian Women in Society and Development*

Ankeli, G. O. (2019). Acquisition of Entrepreneurial and Scientific Skills for Youth Self-Sustainability and Job Creation towards National Development in Nigeria. *World Journal of Entrepreneurial Development Studies*, *3*(1), 24-31.

Barra, S. M. M., & Barra, H. M. D. (2019). Women's Empowerment and Its Impact on Household Use of Solid Fuels in Four Southeast Asian Countries. Asian Women, 35(4)

Duyilemi, A. N. (2017). *Girl-Child Education and Empowerment.* Keynote Address Presented at Workshop for Senior Secondary School Female Students, Teachers and Education officers in Ondo South West Senatorial Districts.

Education Today (2018) Vol. 16 No. 2 Sept. A Quarterly Journal of the Federal Ministry of Education, Abuja.

Federal Office of Statistics (2015): Reports on Gender Statistics in Nigeria Educational System.

Federal Office of Statistics (2016), *Annual Abstract of Statistics* (2016 edition) Abuja

Federal Republic of Nigeria [FRN]. (2014). National policy on education. Lagos: NERDC

Federal Republic of Nigeria [FRN]. (2013). National policy on education. Lagos: NERDC

Fletcher, A. (2014) A *Short Guide to Holistic Youth Development.* Olympia, WA: The Freechild Project.

Ganeshan, R. & Anbalagan, G. (2018). *Sustainable Higher Education for Empowering Women through Open and Distance Learning Programmes of IGNOU.* In Gender Parity and Women Empowerment–Challenges and Way Forward.

Igbodalo, F. (2018). *Contributions of Women to National Development*. Paper presented at the NAUW on Contribution of women to National Development.

Ilo, E. C. (2022). *International labour organization's information sheet on the "convention on workers with family responsibilities*. Paper presented at NLC conference Abuja.

John, P. J. (2017). Examined on principles followed in holistic approach in education. USA. International journal of research in social science 7(4) 346-353

Junussova, M., Iamshchikova, M., Hashim, N., Khan, M. A., Kakar, P., Wardak, F., & Rajabi, S. (2019). The role of women in sustainable economic development. *University of Central Asia*, *53*.

Kaigama, D. M. & Audu H. (2014) Holistic Education: A Needful System of Education for Learners in Conflict places. *Journal of Research & Method in Education (IOSR-JRME)* 4(4) 23-28

Lavanya, B. L., & Ahmed, D. N. (2018). A Study on Exploring the Individual Factors that Affect the Role of Women in Higher Education. *Eurasian Journal of Analytical Chemistry*, 13.

Liu, Y. (2017). Women rising as half of the sky? An empirical study on women from the one-child generation and their higher education participation in contemporary China. *Higher Education, 74(6).*

Malik, S., & Courtney, K. (2011). *Higher education and women's empowerment in Pakistan.* Gender and Education, 23(1).

Murtaza, K. F. (2012). Women empowerment through higher education in Gilgit-Baltistan. *International Journal of Academic Research in Business and Social Sciences*, 2(9).

National Bureau of Statistics (2021). Report on the female enrollment in Nigerian Universities. *Annual report.*

Neelakantan, U., & Tertilt, M. (2008). *A note on marriage market clearing.* Economics Letters, 101(2).

Nworgu, B. G. (2015). *Educational Research. Basic Issues and methodology (4th ed).* By University Trust Publisher Nsukka, Enugu

Odili, C.A, Eze, C. U and Odile, A. K. (2015). Gender Equality as Development Framework of Women Integration in Economic Development. *African Journal of Social and Policy Studies 1 (2)*

Obanya, P. (2014). Revitalizing Education in Africa. Ibadan: Stirling-Horden Publishers (Nig.) Ltd. Pp. 130-135.

Odejide, A. (2013). "Navigating the Seas: Women in Higher Education In Nigeria*"McGill Journal of Education.*

Onah, K. T. (2023). Influence of teachers' academic self-concept on the academic achievement of secondary school physics students': The mediating role of academic motivation. *African Journal of Science Technology and Mathematics Education* 9(2) 70-78

Sako, R. (2015). *Women Empowerment and Advancement Manual*, Kaduna: League for Democratic Women (Leads)

Stark, L., Seff, I., Assezenew, A., Eoomkham, J., Falb, K., & Ssewamala, F. M. (2018). Effects of a Social Empowerment Intervention on Economic Vulnerability for Adolescent Refugee Girls in Ethiopia. *Journal of Adolescent Health*, 62(1).

UNDP (1997) *Human Development Report 1995*, New York: Oxford University Press

UNESCO (2010) *Human Development Report*. New York. Oxford Publishers Ltd.

West, B. S. (2016). Does Employment Empower Women? An Analysis Of Employment And Women's Empowerment In India. *Master of Arts Thesis, August*.

Yadav, S., Vadera, B., Mangal, A., Patel, N., & Shah, H. (2011). A Study on Status of Empowerment of Women in Jamnagar District. National *Journal of Community Medicine, 2(3).*

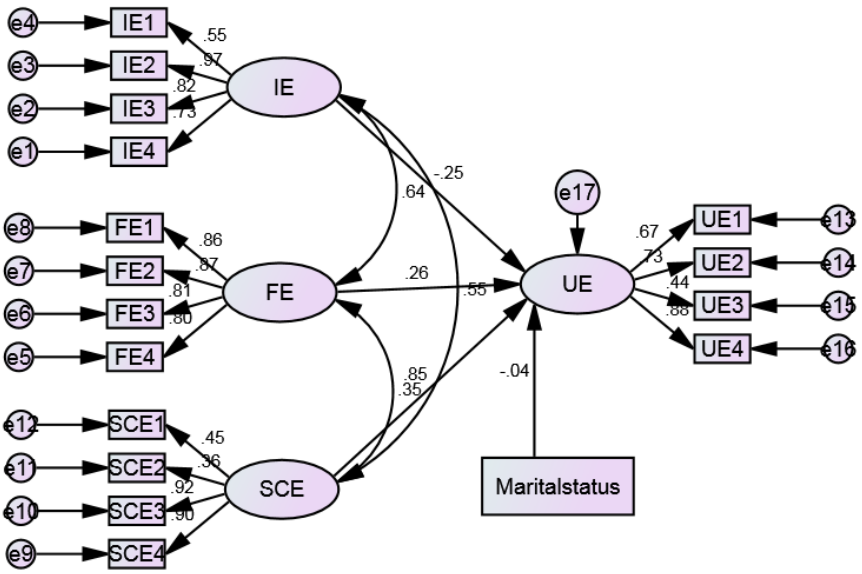

Figure 1
Model on the Influence of University Education on the Holistic Empowerment of female science students'